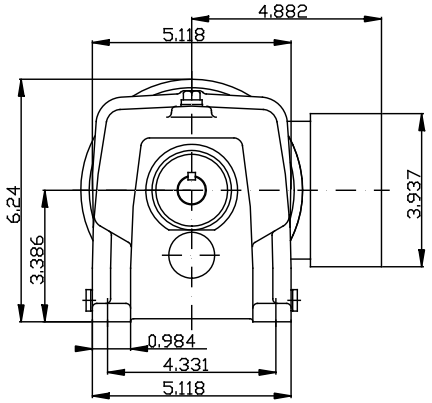

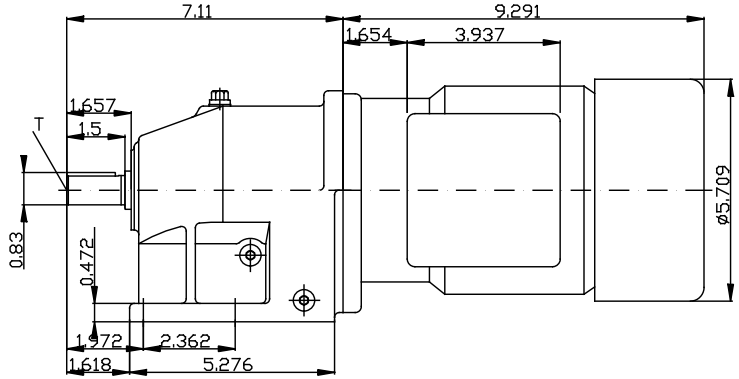

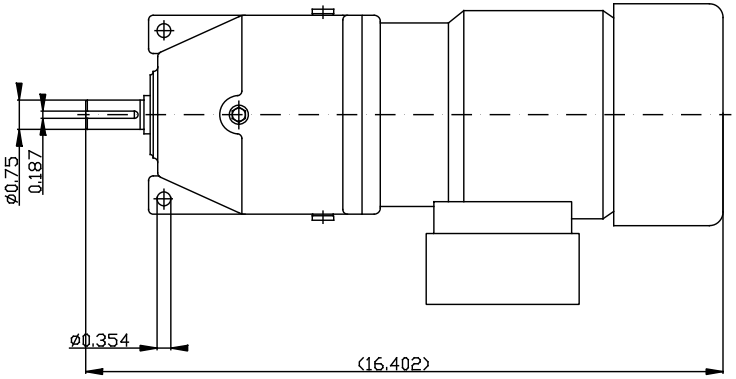

T: Center Drill 1/4 - 20 UNC 2B

Technical design may subject to change!
This drawing was made by NORD CAD 7.0.6

SK 02 - 71 L

NORD

Nord Internet: http://www.nord.com

	Date	Name
Drawn	1/21/2013	JStoakes