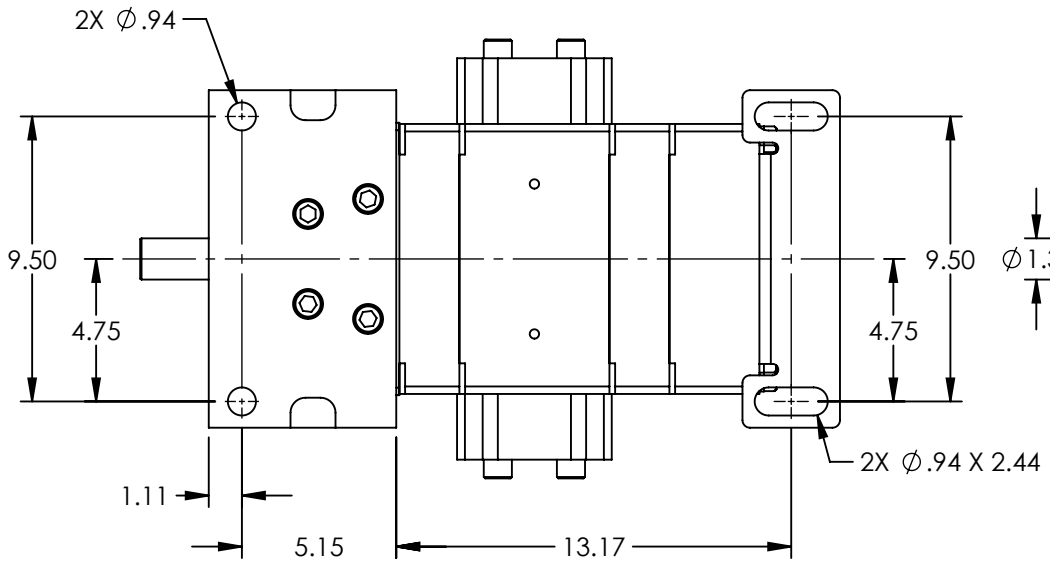

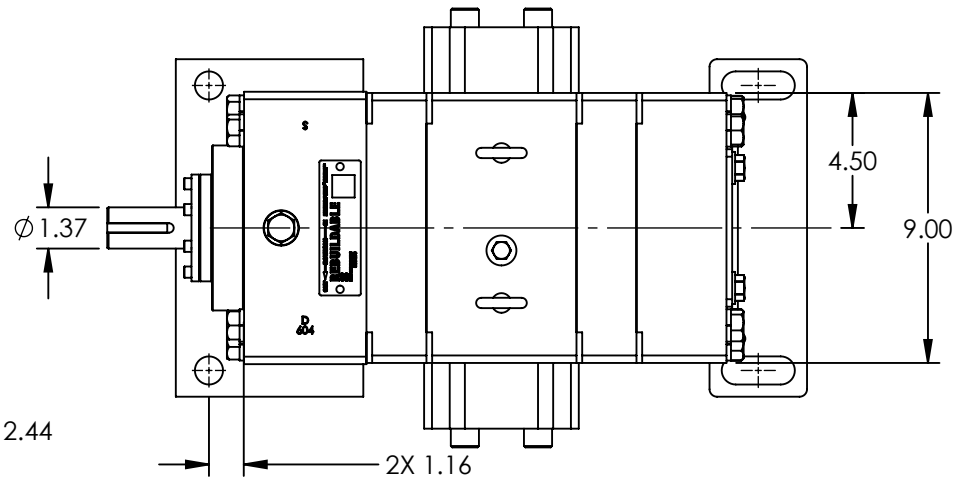

VIEW A-A

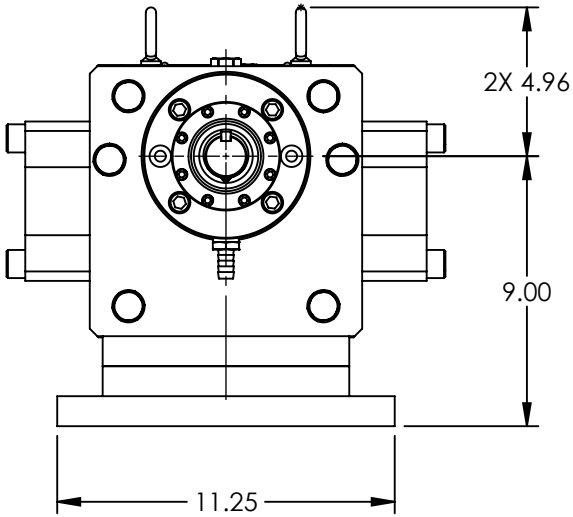

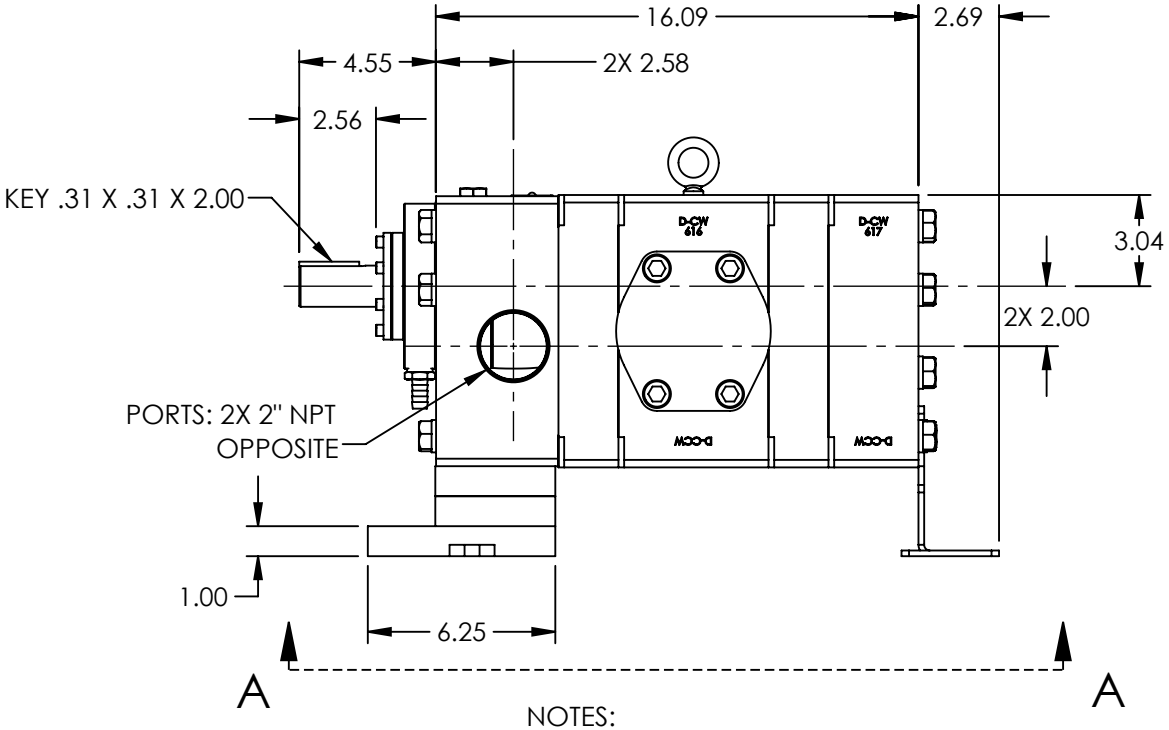

MODELS: GB-41440-K0O, GB-41440-K1O, GB-41440-R0O, GB-41440-R1O

NOTES:

1. ALL DIMENSIONS ARE FOR REFERENCE ONLY.

STATE	Released	07/31/2024	DIMENSIONS ARE IN INCHES	VIKING PUMP	VIKING PUMP, INC. A Unit of IDEX Corporation Cedar Falls, IA 50613 U.S.A. VIKINGPUMP.COM	THIS DRAWING IS THE PROPERTY OF VIKING PUMP, INC. AND IS PROPRIETARY IN GENERAL AND DETAIL. IT SHALL NOT BE COPIED OR ITS CONTENTS REVEALED TO OUTSIDE PARTIES WITHOUT THE WRITTEN CONSENT OF VIKING PUMP, INC.	3D	DWG. NO. SHEET 1 OF 1	REV. A.0
DRAWN	bmanternach	6/29/2020	PROJECT: E400				GPV-1440-038-U	07/31/2024
CHECKED	GDJ	07/31/2024	WAS: EX-E400-004					