PUMP MODEL	TRA20-0300
ORIENTATION	HORIZONTAL
COVER TYPE	STANDARD
INLET	1.5" TRI-CLAMP
DISCHARGE	1.5" TRI-CLAMP
SPECIALS	NONE

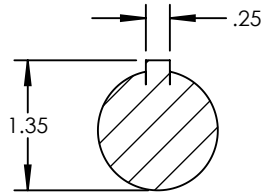

SECTION A-A
SCALE 1 : 2

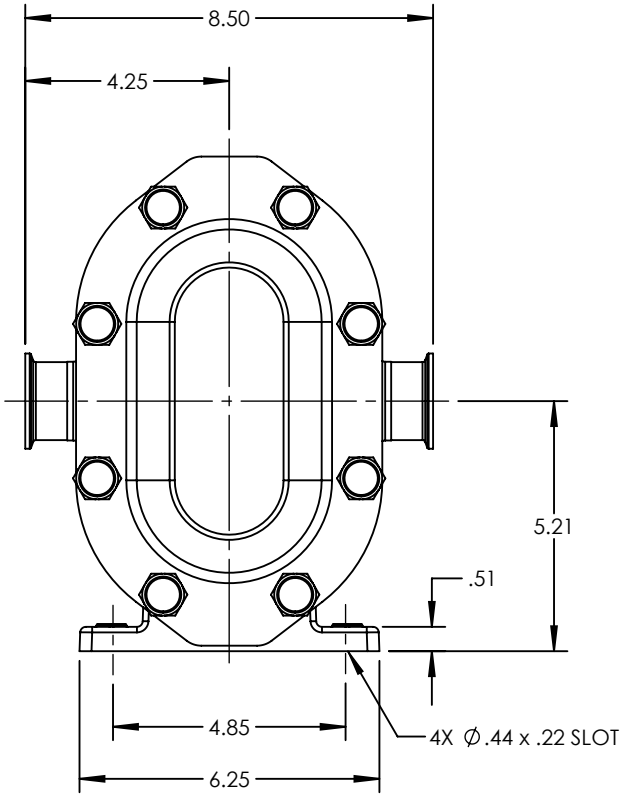

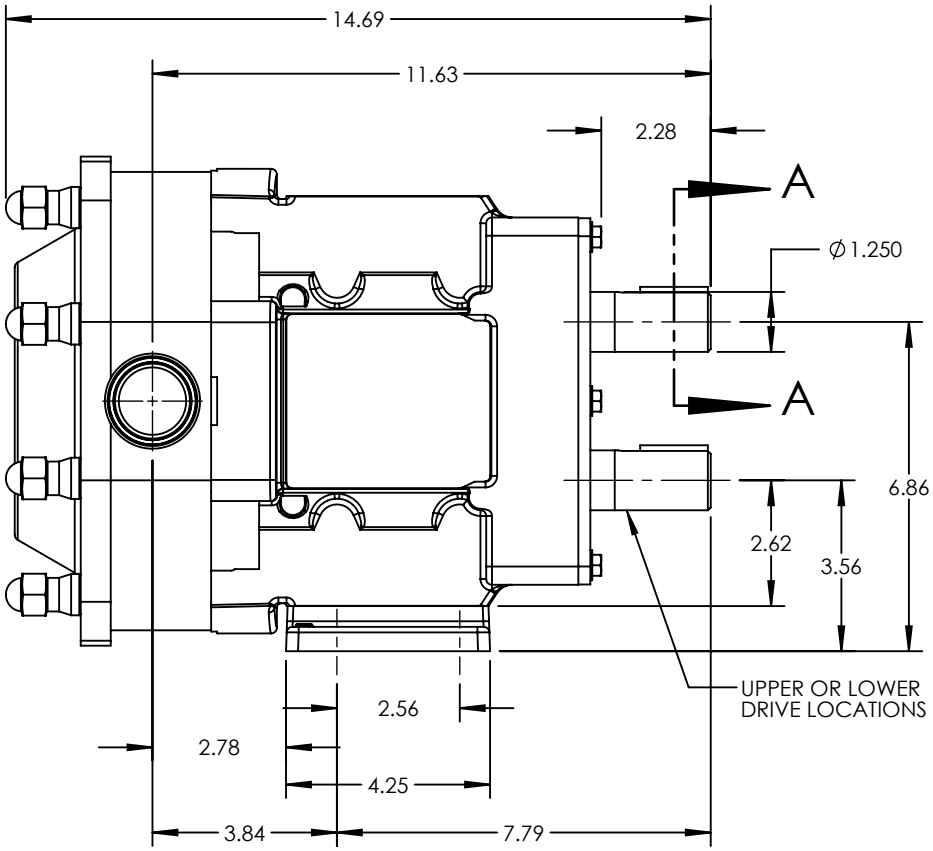

NOTES:
1. THIS IS NOT A CERTIFIED DRAWING. USE FOR GENERAL INSTALLATION ONLY.

STATE	Released	05/19/2022	DIMENSIONS ARE IN INCHES	VIKING PUMP	VIKING PUMP, INC. A Unit of IDEX Corporation Cedar Falls, IA 50613 U.S.A. VIKINGPUMP.COM	THIS DRAWING IS THE PROPERTY OF VIKING PUMP, INC. AND IS PROPRIETARY IN GENERAL AND DETAIL. IT SHALL NOT BE COPIED OR ITS CONTENTS REVEALED TO OUTSIDE PARTIES WITHOUT THE WRITTEN CONSENT OF VIKING PUMP, INC.	3D	DWG. NO. SHEET 1 OF 1	REV. B.1
DRAWN	cmihm	7/17/2013	PROJECT:					TRA20-0300-014	05/19/2022
CHECKED	CJM	05/19/2022	WAS:						