A0

VIKING PUMP HYGIENIC LTD.

SLCS-TC-LEFT

GENERAL ARRANGEMENT DETAILS

PUMP INFORMATION

PUMP MODEL	STERILOBE SLCS/0169/15
LEFT/TOP CONNECTION	1.5" TRI-CLAMP
RIGHT/BOTTOM CONNECTION	1.5" TRI-CLAMP
DRIVE SHAFT POSITION	LEFT HAND DRIVE
FRONT COVER ADDITIONS	STANDARD
ROTORCASE ADDITIONS	STANDARD
GEARBOX ADDITIONS	STANDARD
PUMP ADDITIONS	STANDARD

THIS IS NOT A CERTIFIED DRAWING, USE FOR GENERAL INSTALLATION ONLY

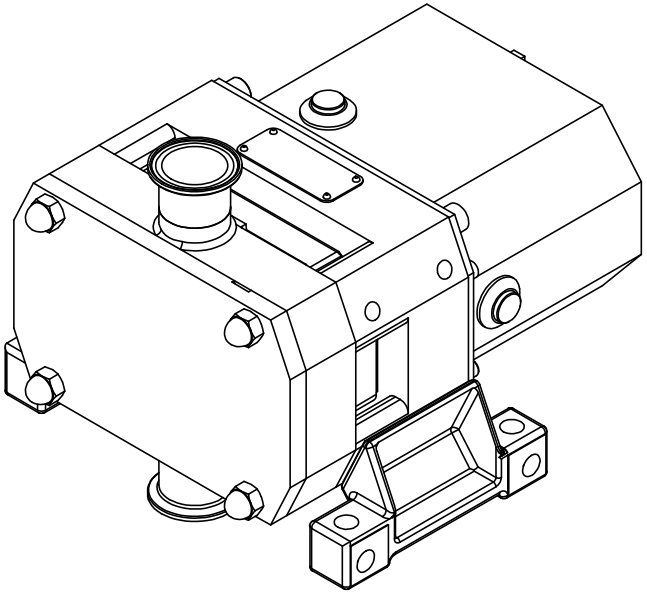

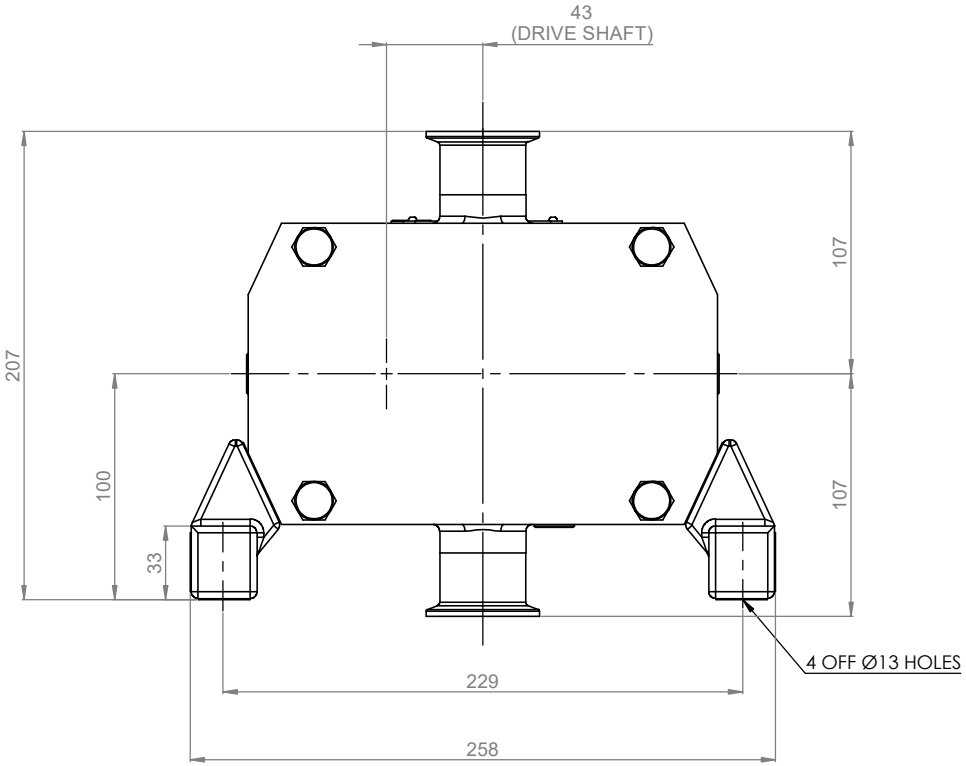

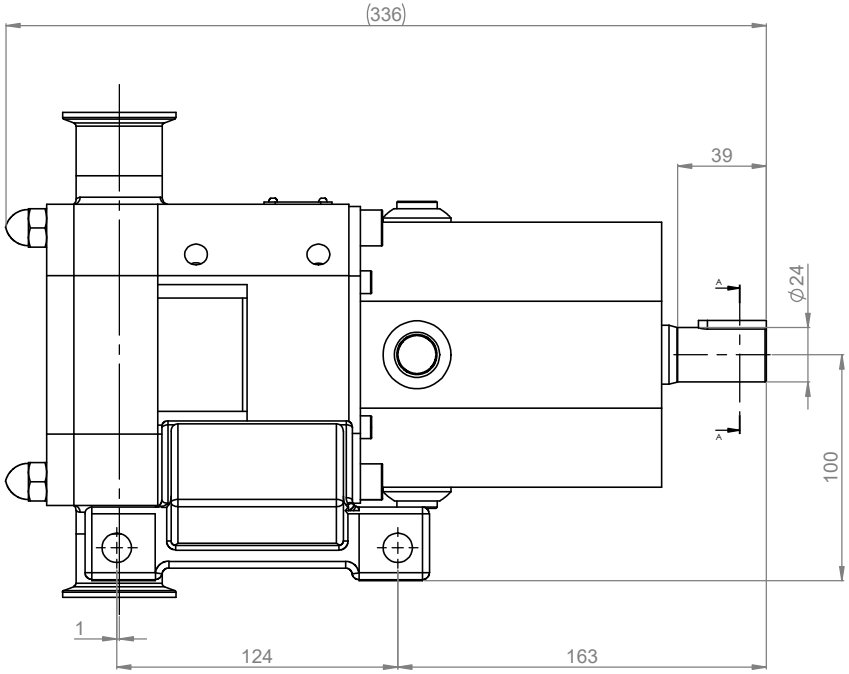

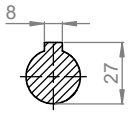

SECTION A-A

UPDATED TO CURRENT STANDARD	B	29/04/2022
AMENDMENT	ISSUE	DATE

VIKING PUMP HYGIENIC

HIGHFIELD INDUSTRIAL ESTATE, EASTBOURNE, EAST SUSSEX, BN23 6PT
TEL: (+44) 1323 509211

COPYRIGHT:

THIS DRAWING IS THE SOLE PROPERTY OF **VIKING PUMP HYGIENIC LTD.** IT MUST NOT BE COPIED OR USED IN PART OR FULL WITHOUT PRIOR WRITTEN CONSENT.

UNLESS OTHERWISE STATED:

ALL DIMENSIONS $^{+2.50}_{-}$
ANGLES $^{+2.0°}_{-}$

DO NOT SCALE THIS DRAWING
REMOVE BURRS AND SHARP EDGES
DIMENSIONS IN MILLIMETRES

IF IN DOUBT ASK

PROJECTION	DRAWN	CHECKED	TITLE:
	KCB	IPJB	GENERAL ARRANGEMENT

DRG. NO: **SLCS-TC-LEFT**