EV CHARGER ARMOR
FOR LEVEL 2 CHARGERS
INSTALLATION INSTRUCTIONS



⚠ IMPORTANT SAFETY INFORMATION

READ AND COMPLETELY UNDERSTAND ALL INSTRUCTIONS BEFORE INSTALLING PRODUCT. FAILURE TO FOLLOW THESE INSTRUCTIONS MAY RESULT IN PERSONAL INJURY OR DEATH.

This product is intended for use by trained technicians only. This product should not be used by anyone who is not familiar with and not trained to use it. When working in the area of energized lines, extra care should be taken to prevent accidental electrical contact. Be sure to wear proper safety equipment per your company protocol. These instructions are not intended to supersede any company construction or safety standards. These instructions are offered only to illustrate safe installation for the individual. PLP products are intended for the specified application only. Do not modify this product under any circumstances. Do not reuse or reinstall any PLP product unless that capability is expressly indicated in the product's Installation Instructions. For proper performance and personal safety, be sure to select the proper PLP product before installation. PLP products are precision devices. To ensure proper performance, they should be stored in cartons under cover and handled carefully.

⚠ RECOMMENDATION

Periodic inspection of the Charger Armor is recommended to verify that hardware hasn't loosened or damage has not occurred to the unit. If any damage is noticed, replace the Charger Armor immediately. Charger Armor is coated to resist corrosion, but if any corrosion is noticed, touch up paint with a rust inhibitor can be used.

PACKAGE COMPONENTS

Kit Catalog Number: **CHARGER-ARMOR-200**

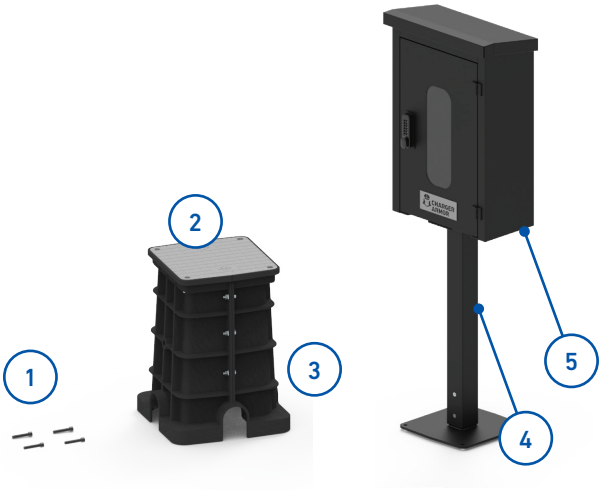

Catalog Number: **CHARGER-ARMOR**



1. Lid Bolts (4)
2. Cast Aluminum Lid
3. Level 2 Foundation Base
4. Pedestal
5. EV Charger Armor

Tools Required:

- Back hoe or shovel(s)
- 7/32" Allen Wrench
- Assorted drill bits
- Flathead screw driver
- Phillips screw driver
- 1/2" Socket

⚠ WARNING

1. Always check with local codes to ensure compliance. You may need to adjust the guidelines provided here to comply with local regulations.
2. **ALWAYS CALL BEFORE YOU DIG**: 811 is the number used most in the U.S.
3. Use only qualified technicians for the task at hand. Improper installation can lead to equipment damage, injury, or even death of persons involved.
4. Follow all instructions for the charger unit being installed.

PREPARATION

If PLP's EV Charger Armor is being installed with PLP's EV Base, please refer to the EV Base installation instruction (SP3682) and complete the installation before starting the installation of the EV Charger Armor Pedestal. If the Charger Armor Pedestal is being installed with concrete pads, please proceed to Step 4A.

Click to view Installation Instruction SP3682.

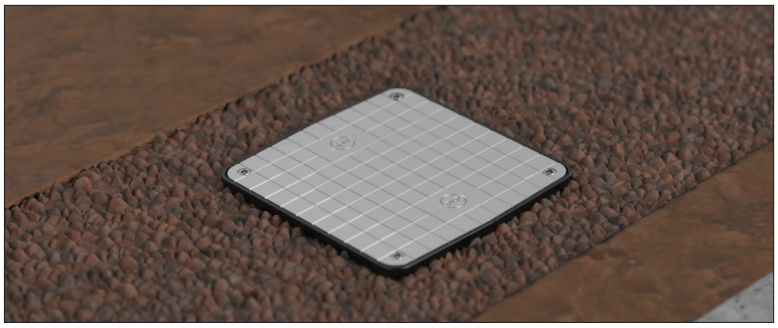

EV PEDESTAL BASE PLATE INSTALLATION WITH PLP LEVEL 2 FOUNDATION

1 Begin by removing the 1/2" bolts that hold the aluminum lid to the Level 2 Foundation Base. Once all four bolts are removed, lift the lid off the foundation and set aside.

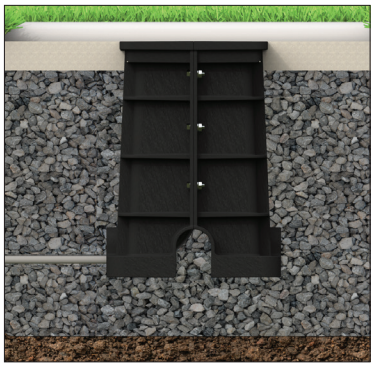

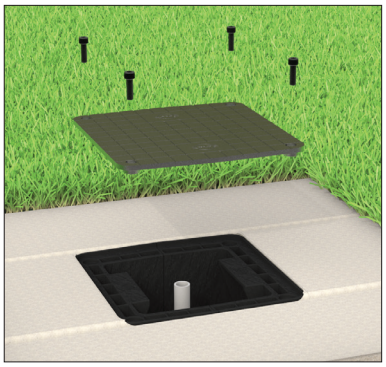

2 With the lid removed, place the EV Pedestal base plate onto the foundation where the lid used to be. The base plate is a 1 to 1 replacement for the lid.

NOTE: The lid and baseplate are not square and can only fit on the foundation one way. See the figure to the right. If there are fitment issues with the baseplate, lift it from the foundation and rotate it 90 degrees before placing back over the foundation.

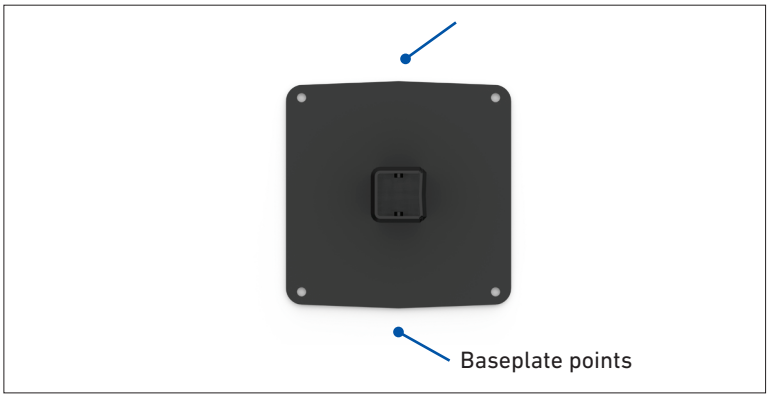

3 Before replacing the bolts in the EV foundation, pull enough wire through the square opening to connect to the charger dispenser unit.

NOTE: It is 34.5" from the bottom of the baseplate opening to the top of the pedestal.

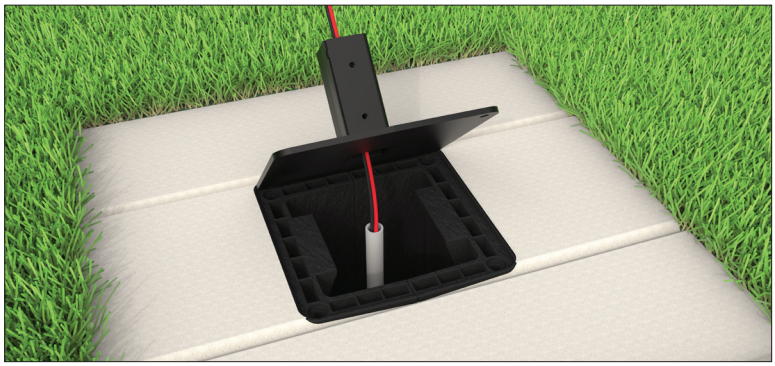

4 Use the bolts included in the pedestal hardware package and insert them into the EV foundation in the four corners of the pedestal baseplate. Torque each bolt to 15 ft-lbs.

Proceed to Step 5.

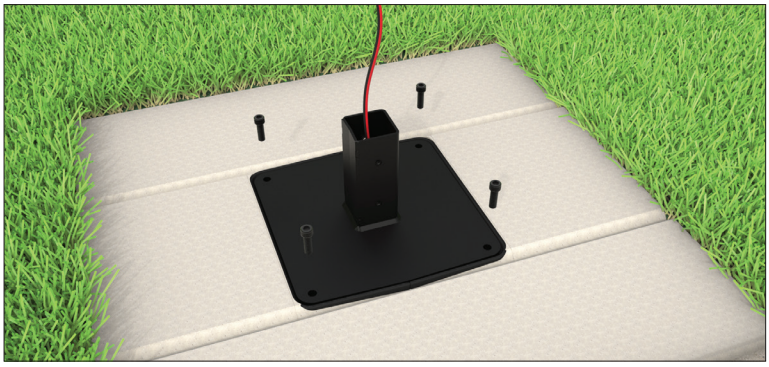

EV PEDESTAL BASE PLATE INSTALLATION WITH CONCRETE PADS

There are many hardware types that can be used to install into wet or dry concrete. Check with your local permitting jurisdiction on which installation method is best for your project.

4A **Pouring a new concrete pad:**
While preparing the site for concrete, use 1/2" L or J anchors and tie them in with any rebar being used. Use the diagram from **Figure 1** for the optimal placement of the anchors so the pedestal base fits appropriately. Verify the location of the conduit to make sure it is centered to fit into the pedestal baseplate.

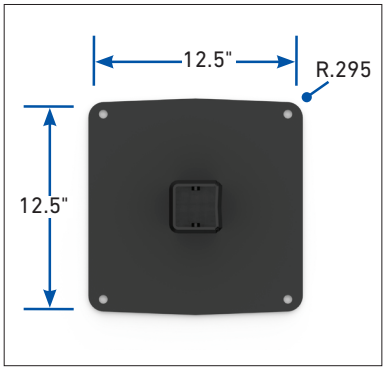

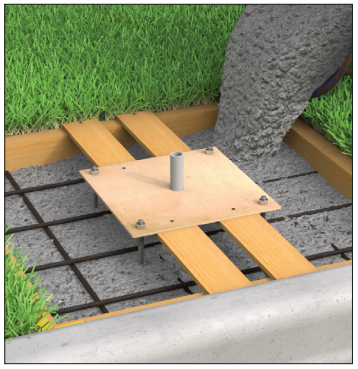

Figure 1



4B

After the concrete has reached its cure time, place the pedestal baseplate over the four anchor bolts and conduit run.

Make sure to pull all the wire needed to reach the connection for the EV charger dispenser unit. For an easy concrete form, use the PLP concrete pad jig, (sold separately).

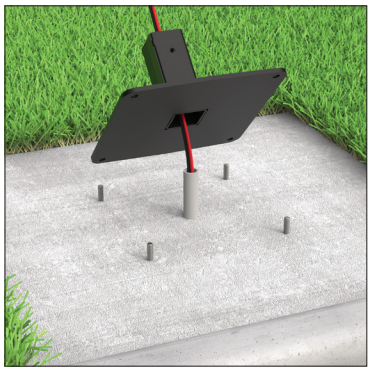

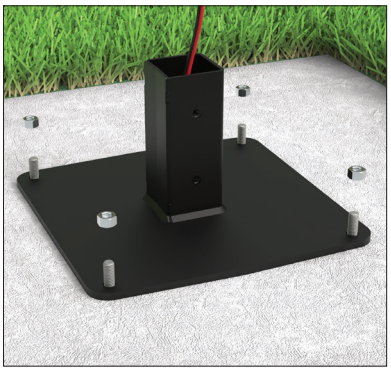

4C

Existing concrete pad:
Begin by removing the EV pedestal baseplate from the packaging and placing it on the concrete pad. Position the plate in the installation area and mark the locations of the mounting holes onto the concrete. Remove the plate and drill pilot holes using the appropriate masonry drill bit for your desired concrete anchors. The types of anchors used in this step are up to the discretion of the contractor. Finish the installation by following the concrete anchor manufacturer's guidelines.





EV PEDESTAL AND CHARGER ARMOR ASSEMBLY

5

With the base plate mounted, the pedestal is ready for assembly. Place the 3.5" x 3.5" pole over the stud in the baseplate, lining up the holes at the base of the pole with the holes in the stud.

Use the provided 3/8" hardware to secure the pole to the baseplate. Torque the bolts to 20 ft-lbs.



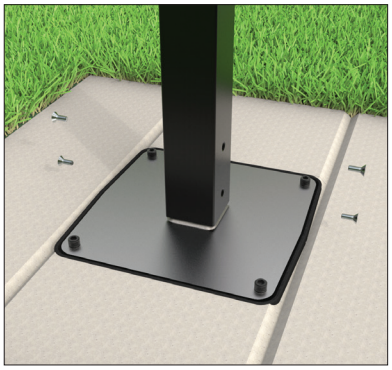

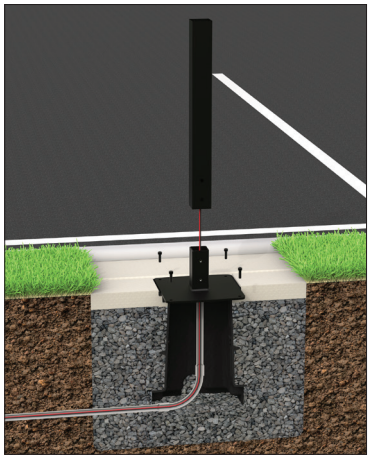

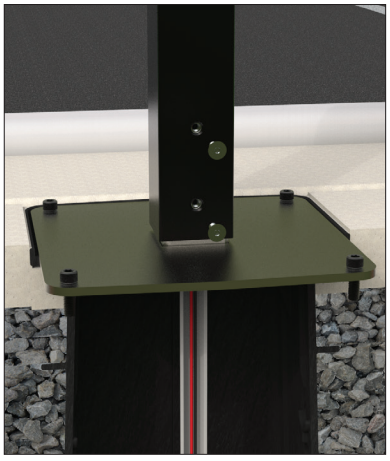

6

Before mounting the Charger Armor cabinet on the pedestal, remove the decorative plate from the bottom of the cabinet to access the mounting holes. The plate is a tight fit, so it will need to be rotated in order to fully remove it from the cabinet. Set it aside for now.





7

Lift the Charger Armor cabinet onto the pedestal, lining up the mounting holes. Continue to pull wires through the square opening and into the cabinet.

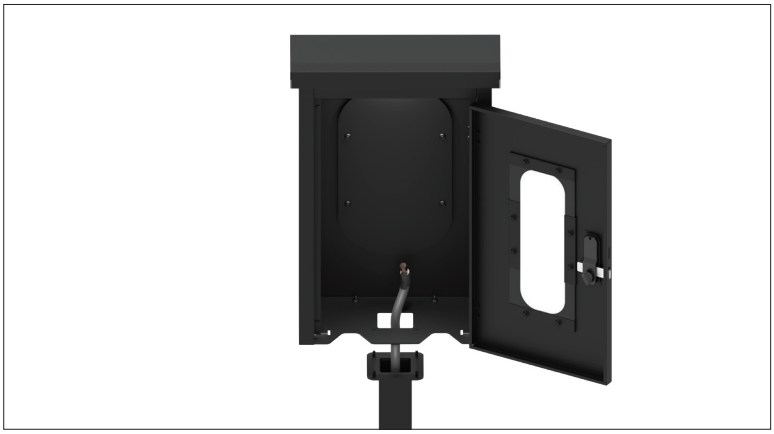

8

Secure the Charger Armor cabinet to the pedestal by inserting the provided 5/16" carriage bolts into the square holes from the bottom of the cabinet. The provided 5/16" flange nuts can then be fastened to the threads from inside the cabinet.

Torque to 15 ft-lbs.

The decorative plate that was removed in Step 6 can now be replaced into the cabinet. The hole in the plate is sized for 1/2" conduit fittings. Install any required fittings prior to re-installing the decorative plate.

Now is a good time to continue feeding or terminating any wires into the cabinet, using the provided hole in the decorative plate.

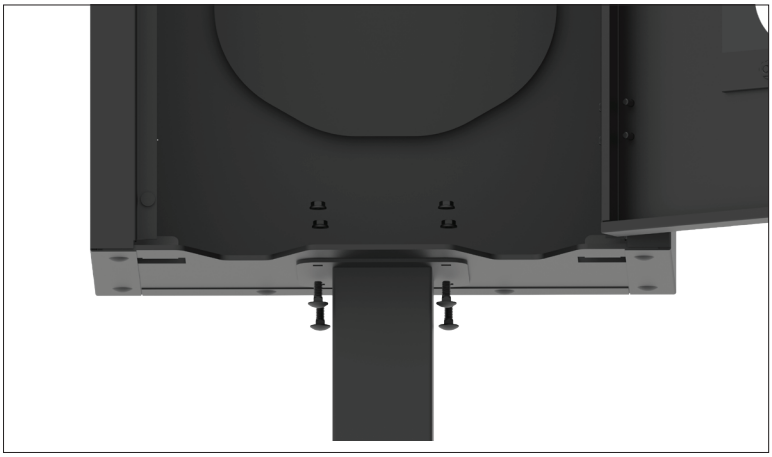

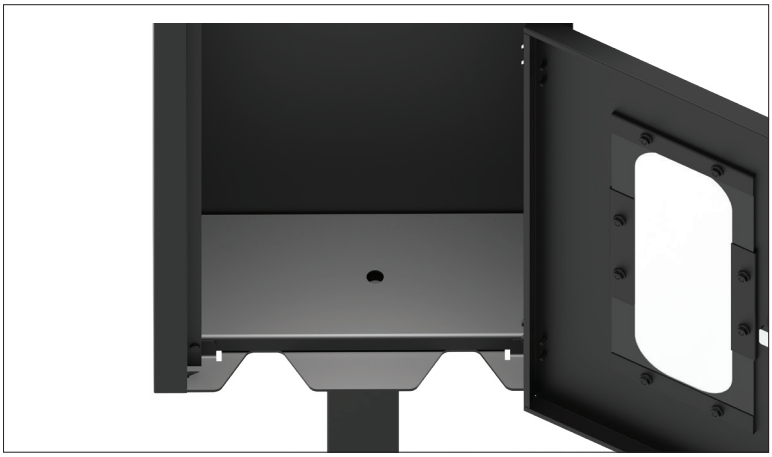

LOCK ASSEMBLY



The Charger Armor comes with the lock packaged separately to allow for selecting a private code for entry. Within the lock packaging, you will find:

1. Combination lock assembly
2. Front gasket
3. Adapter plate
4. Back gasket
5. Deadbolt assembly
6. Mounting screws (2)

NOTE: Since the back of the combination lock assembly needs to be accessible, it is best to set the code for the lock now.

9

First, remove the combination lock assembly (1) from the packaging. The reverse side of the housing contains a set of switches that are used to set the personalized code for your lock.

Each switch is made up of a dot and vertical line. If the dot is facing outwards, the number corresponding to the switch is not active in the code to open the door. To activate a number as part of your combination, rotate the switches so the dot is pointing inward using a flathead screw driver.

There is also a switch that is labeled with a "Y". This switch serves as an "enter" button after inputting the code. For example, if you have set the code to 1234, and the "Y" switch is rotated inward, you would enter the code by pressing 1234 and Y. The lock will only release once the Y button is pressed. Otherwise, when the Y switch is not enabled, the lock will release on the last number of the code.

Once you are satisfied with the code selection, return to the front of the combination housing. Press the "C" button to clear any mistaken button presses, followed by your selected code. Attempt to rotate the lock handle to verify that your code has worked.

If the lock handle rotates, you have successfully set your code. Return back to the top of Step 9 and try again if the lock handle does not turn.

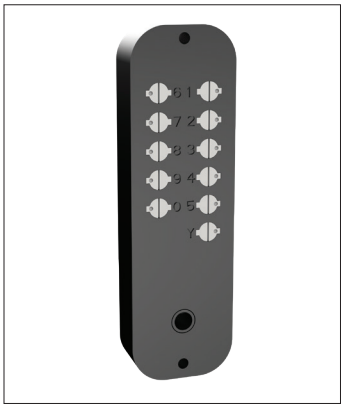

All switches are disabled, no code is set.



The code is set to "1234".

NOTE: If all switches are disabled, the lock will rotate freely.

10 Now that the code is set, the lock can be assembled and installed on the Charger Armor cabinet.

Start by pressing the included gaskets onto the combination lock assembly and deadbolt assembly. The gaskets should fit snuggly around each housing.



11 If not already installed, insert the spindle into the combination lock assembly.

For now, the combination lock assembly can be set to the side.



12 Using the provided adapter plate, line up the mounting holes with the deadbolt assembly. Ensure the adapter plate is positioned with two holes at the bottom and one hole at the top.

Next, the mounting screws can be inserted into the mounting holes from the deadbolt assembly side. The mounting screws will rest in place for now and will be tightened later.





13 With the Charger Armor cabinet door open, position the deadbolt assembly on the inside of the door, making sure the screws slide through the pre-drilled holes in the door.

If the deadbolt assembly is currently unlocked, it is recommended to turn the handle on the assembly to the locked position. This will help hold the assembly in place while installing the combination lock assembly.

Approaching from the front of the door, line up the screw holes and spindle with the combination lock assembly. Once the assemblies are aligned on the door, the screws can be tightened with a Phillips head screwdriver from the deadbolt assembly side.





MOUNTING EV CHARGER TO CHARGER ARMOR CABINET

14 To mount the charger, remove the mounting plate from within the Charger Armor cabinet. Four 5/16" flange nuts hold the mounting plate in place. Loosen and remove the nuts using a 1/2" wrench or socket.



15 Using the charger mounting template, mark the hole locations on the faceplate and drill according to the charger manufacturer's specifications.

With the mounting plate installed, follow your charger manufacturer's installation guide to finish mounting the charger to the plate.





16 Return the mounting plate to the inside of the cabinet, making sure to realign the mounting plate holes with the bolts at the back of the cabinet. Once the mounting plate is seated, reinstall the 5/16" nuts that were removed in Step 14. Tighten using a 1/2" socket or wrench.

Torque to 8 ft-lbs.





17 Continue the installation by connecting the routed cables to the EV dispenser unit. Follow the charger manufacturer's suggested installation instructions to complete the installation.



18 Completed installed installation.

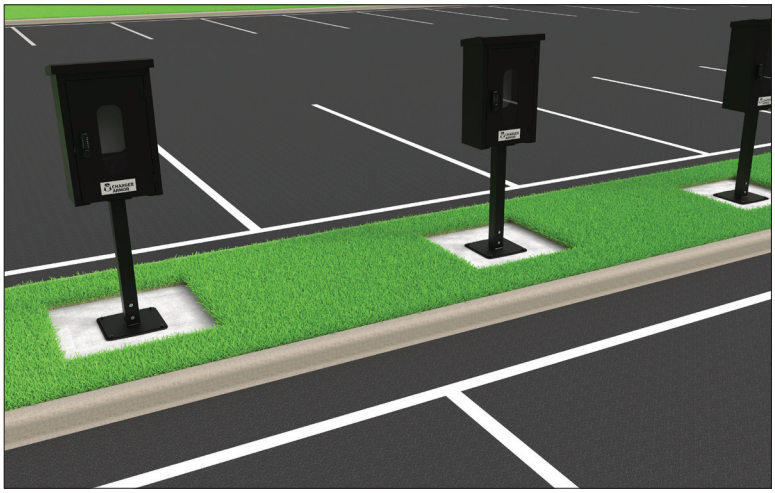

GLOBAL HEADQUARTERS
660 BETA DRIVE
CLEVELAND, OH 44143

+1 440 461 5200
EV@PLP.COM
PLP.COM

© 2026 Preformed Line Products
SP3818