PRODUCT CATALOG

FIBERLIGN® OPGW HARDWARE

Cable Dead-Ends | Cable Supports & Suspensions | Pole Hardware & Accessories
Motion Control Products | Cable Protection | Cable Storage Solutions & Splice Closures

ABOUT PLP

PLP protects the world's most critical connections by creating stronger and more reliable networks. Our precision-engineered solutions are trusted by energy and communications providers worldwide to perform better and last longer. With offices and manufacturing facilities in over 20 countries, PLP works as a united global corporation, delivering high-quality products and unparalleled service to customers around the world.

MANUFACTURING OPERATIONS

Headquartered in Cleveland, Ohio, PLP delivers high-quality, dependable solutions and market-leading customer service through our three U.S. manufacturing plants, 20+ global facilities, and a network of more than 4,000 team members.

PLP's facilities in Arkansas, North Carolina, and Ohio manufacture ADSS system components in accordance with ISO quality systems, including formed wire dead-ends, cast tangent supports, motion control devices, and injection-molded splice products.

TESTING & QUALITY CONTROL

Thomas Peterson, the founder of PLP, believed in innovation and quality. That's why product testing has been an integral part of PLP since its beginning in 1947. In fact, not only do we test products during the development stage in our research laboratory at PLP's global headquarters, we also test products at all of our manufacturing facilities to ensure quality is never compromised.

Today, our state-of-the-art lab is one of the largest testing facilities of fiber connectivity devices for the communications industry as well as conductor and cable accessories for the power utility industry. While many competitors have reduced or eliminated their testing labs, we recently expanded ours by 50 percent, making it a 23,000 square foot facility.

SALES CONTACTS

COMMUNICATIONS SALES

ELECTRIC UTILITY SALES

CUSTOMER SUPPORT

U.S. SUPPORT

Tel: 440.461.5200

Fax: 440.442.8816

Email: info@plp.com

INTERNATIONAL SUPPORT

Email: international@plp.com

CO-CA-1024-4

CONTENTS

FIBERLIGN® OPGW HARDWARE

SALES CONTACTS AND CUSTOMER SUPPORT 6

PRODUCT PLACEMENT 8

SECTION 1 – DEAD-ENDS
FIBERLIGN® U-Bolt Dead-End 12
FIBERLIGN® Formed Wire Dead-End 16
FIBERLIGN® Bolted Dead-End 20

SECTION 2 – SUSPENSIONS & SUPPORTS
FIBERLIGN® Suspension 26
FIBERLIGN® Cushion Clamp 32
FIBERLIGN® EZ Cushion Suspension 38
FIBERLIGN® Trunnion Support 44

SECTION 3 – MOTION CONTROL
Spiral Vibration Damper 50
VORTX™ Vibration Damper 52
Air Flow Spoiler 56

SECTION 4 – CABLE STORAGE & SPLICE CLOSURES
SLACKLOOP® Adjustable Cable Storage 60
SLACKLOOP® 60" Cable Storage 62
COYOTE® 6.5" Dome Closures with FIBERLIGN® CRB System 64
COYOTE® 9.5" Dome Closures with FIBERLIGN® CRB System 70
COYOTE® Stainless Steel Splice Case 76
COYOTE® Defender – Ballistic Protection 80
COYOTE® Defender 2 – Ballistic Protection 82

SECTION 5 – POLE HARDWARE
FIBERLIGN® Shield Wire Bracket 86
FIBERLIGN® Downlead Cushion 90

SECTION 6 – ACCESSORIES
FIBERLIGN® Ground Clamp 96
FIBERLIGN® Ground Wire Assemblies 98
FIBERLIGN® Optical Tension Device 100
FIBERLIGN® Repair Rods 102

OTHER PRODUCTS TO CONSIDER 104

SECTION 7 – INDEX 105

PRODUCT PLACEMENT

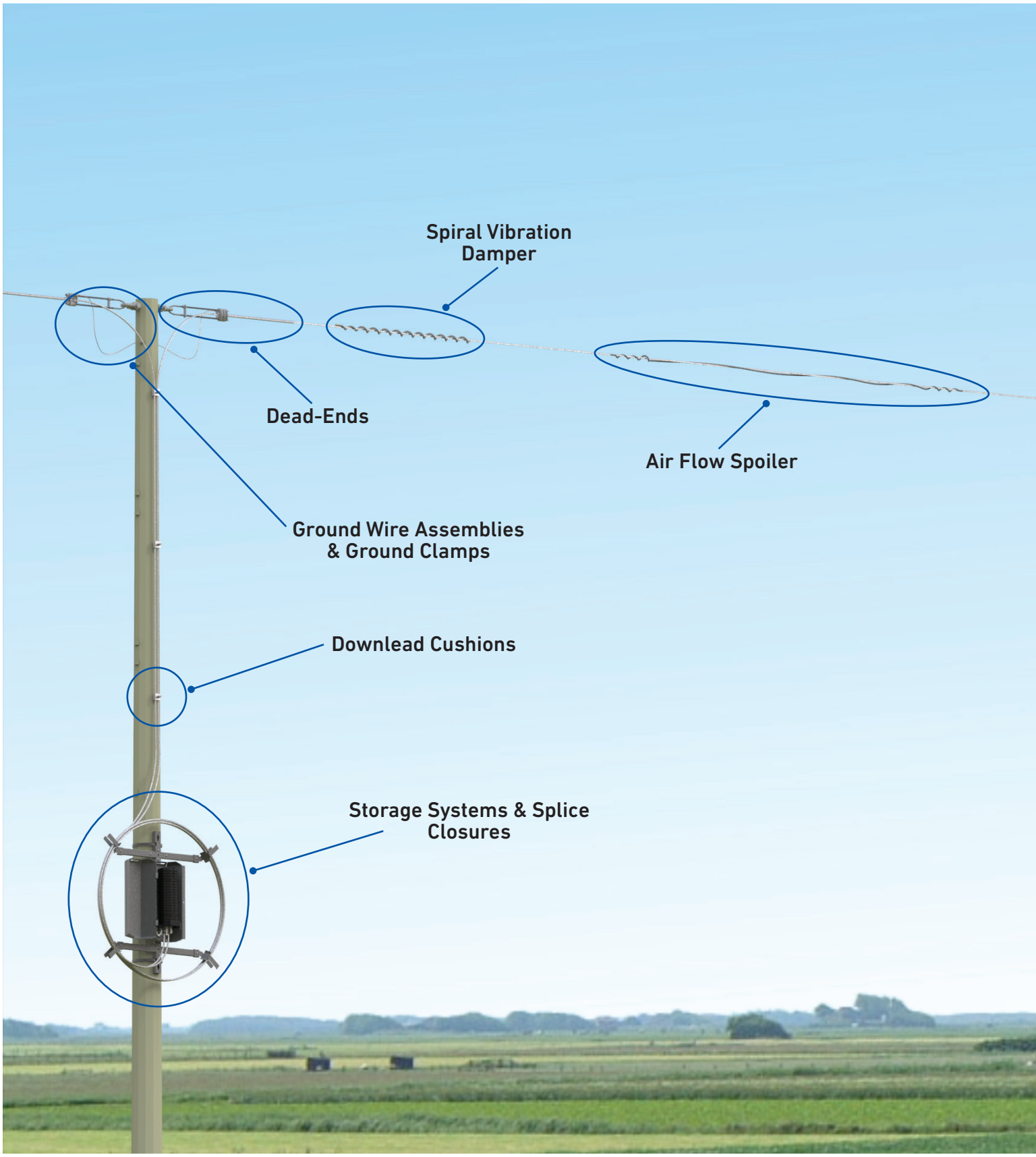

CO-CA-1024-4

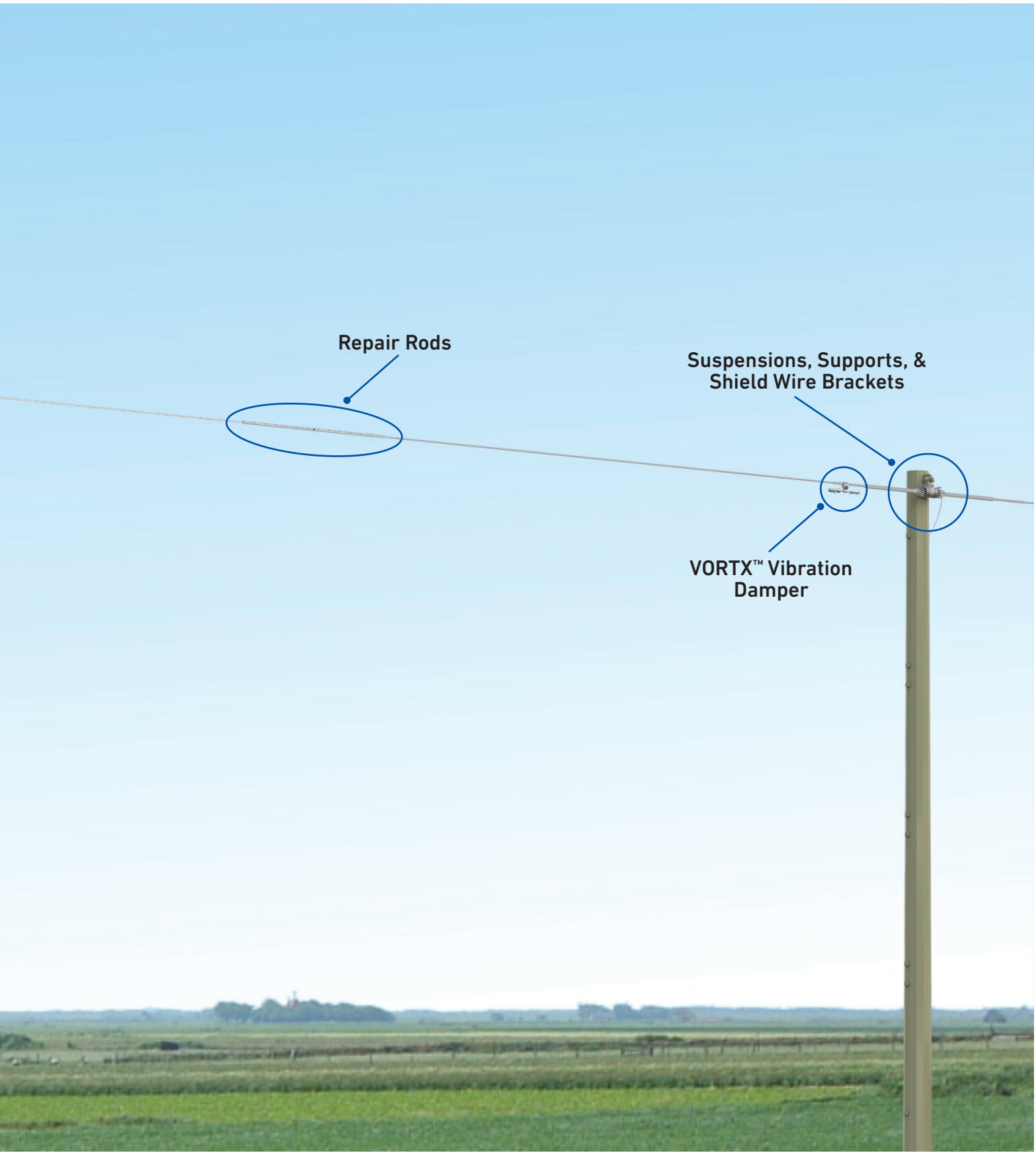
Repair Rods
Suspensions, Supports, &
Shield Wire Brackets
VORTX™ Vibration
Damper

SECTION 1

DEAD-ENDS

FIBERLIGN® OPGW HARDWARE

FIBERLIGN® U-BOLT DEAD-END

The **FIBERLIGN U-Bolt Dead-End** is designed to terminate Optical Ground Wire (OPGW) while minimizing any compressive stresses that may be transferred to the core or optical elements within it. The retaining rods couple with the wedges where they are received within the housing. As the U-Bolt is secured to the structure, the dead-end assembly distributes the axial and compressive loads along the length of the dead-end.

FEATURES AND BENEFITS

- One-piece housing and subset rods minimize overall components and simplify installation steps
- Slotted housing allows the dead-end to be applied at any location along the OPGW
- A ground wire assembly can be attached to the housing with the supplied galvanized 1/2"-13 x 1" UNC bolt and lock washer
- An optional ground wire assembly can be included with the U-Bolt Dead-End
- In addition to the maximum allowable 4" of take-up for tension adjustment, the U-Bolt provides approximately 20" of additional clearance distance, eliminating the need for extra hardware such as turnbuckles or extension links
- Dead-end components are made of corrosion-resistant materials
- Retaining rods and wedges can only be reused once for retensioning after initial installation. Hardware components of the dead-end can be reused if they are in good condition.
- The FIBERLIGN U-Bolt Dead-End has been thoroughly tested for vibration, mechanical loading, and optical attenuation in accordance with IEEE Standard 1138 and IEEE Standard 1591.1

HOLDING STRENGTH

- Designed and tested in accordance with IEEE Std 1138 and 1591.1
- Dependent on internal construction and composition of material used for individual strands of the OPGW
- Highest holding capabilities exist with cables that use all aluminum-clad steel strands in a single layer
- OPGW with multiple strand layers and/or aluminum alloy strands may reduce holding capabilities
- Contact PLP for U-Bolt Dead-End holding strengths for specific OPGW designs

ATTACHMENT FITTINGS

- An Anchor Shackle **(Catalog Number: AS-5L)** can be included with U-Bolt Dead-Ends
- U-Bolt Dead-Ends can be attached to poles or structures with pins, sheave wheels, or other fittings with smooth contours, appropriate diameters (see table below), and adequate strength for proper fit and support under loading conditions

U-Bolt Dead-End Diameter	Attachment Fitting/Pin Diameter Range
5/8"	5/8" (15.9 mm) – 1-7/8" (47.6 mm)
3/4"	5/8" (15.9 mm) – 13/16" (20.6 mm)

- U-Bolt Dead-Ends can also be attached to a vang or structure plate with chamfered holes (ex. structure plate with maximum thickness of 1-1/16" (27 mm), 1" (25 mm) diameter hole, 1/8" x 45 degrees (3.2 mm x 45 degrees) chamfer, and 1-15/16" (24 mm) installation clearance)
- Consult PLP for installation to other plates and fittings

30,000 lb Anchor Shackle
(**Catalog Number: AS-5L**)

COMPONENTS

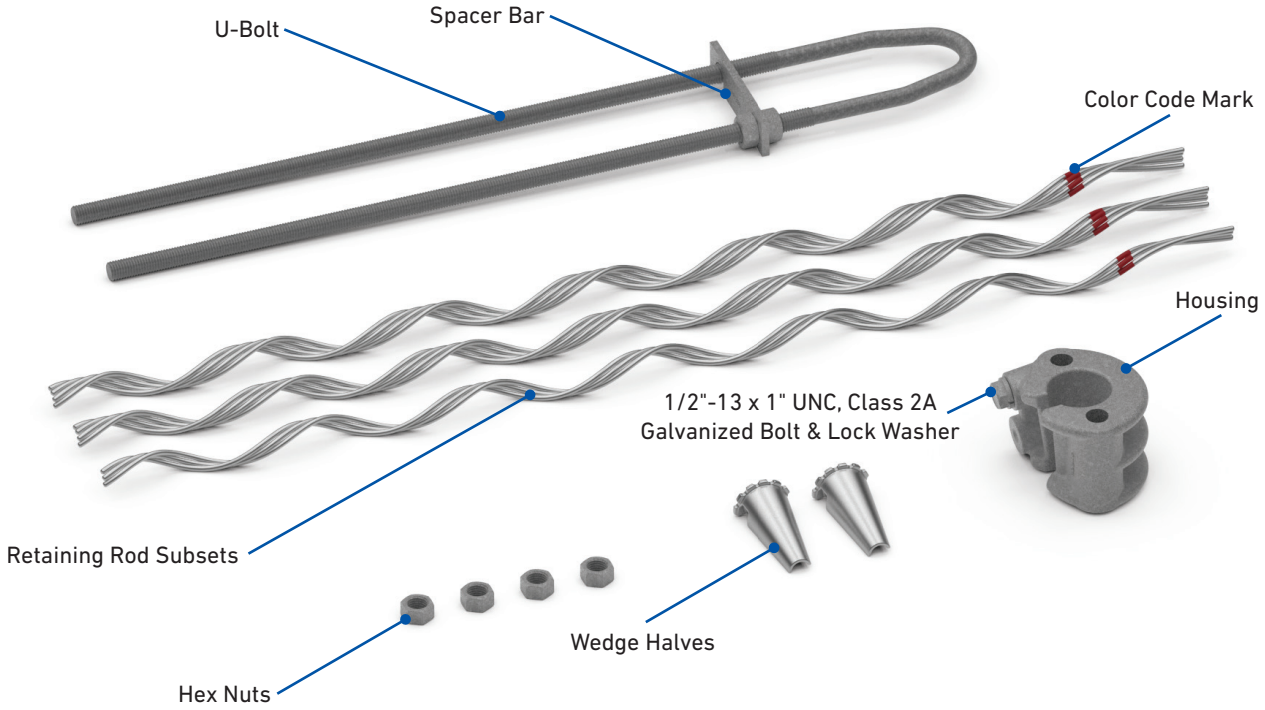

DIMENSIONS

U-Bolt Dead-End Assembly

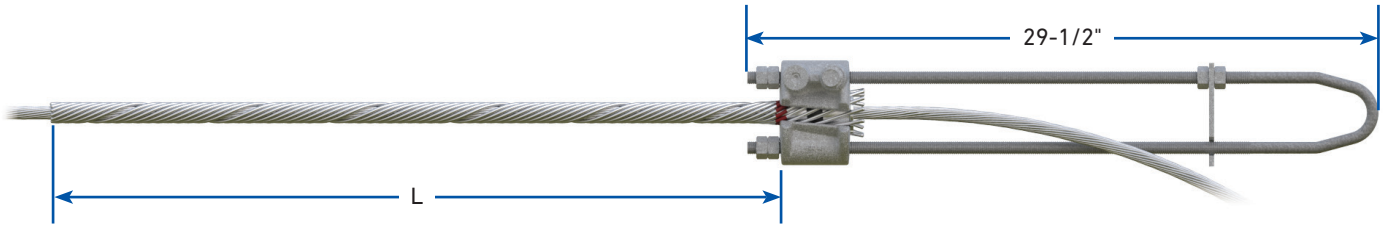

AS-5L Anchor Shackle

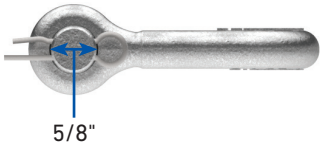

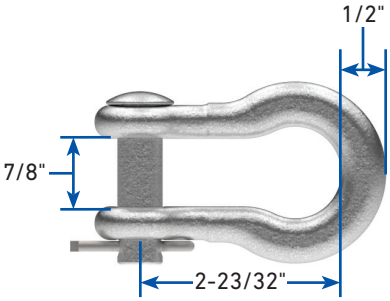

ACCESSORIES

Catalog Number	Suffix Code	Description
710010016	G	4 ft (1.2 m) Long #4 (7W) Copper Ground Wire Assembly with One Terminal for 1/2" Bolt
710010294	GA	4 ft (1.2 m) Long 4/0 (7W) Aluminum Ground Wire Assembly with One Terminal for 1/2" Bolt
710011205	GA2	5 ft (1.5 m) Long 95 mm² (19W) Aluminum Ground Wire Assembly with One Terminal for M12 Bolt and One Terminal for M16 Bolt – Includes bolts, washers, lock washers, and hex nuts for each terminal
AS-5L	S2	30,000 lb Anchor Shackle

4 ft (1.2 m) Long #4 (7W) Copper Ground Wire Assembly
(Catalog Number: 710010016, Suffix Code: G)

4 ft (1.2 m) Long 4/0 (7W) Aluminum Ground Wire Assembly
(Catalog Number: 710010294, Suffix Code: GA)

5 ft (1.5 m) Long 95 mm² (19W) Aluminum Ground Wire Assembly
(Catalog Number: 710011205, Suffix Code: GA2)

ORDERING INFORMATION

- Select the appropriate catalog number for the dead-end from the table below based on the diameter of the OPGW.
- Add the appropriate suffix code to the dead-end catalog number to include an anchor shackle and/or ground wire assembly **(ex: Catalog Number 2801304S2, 2801304G, or 2801301S2G)** - see ACCESSORIES on the previous page for suffix codes.
- Refer to the image under DIMENSIONS on the previous page for the Exposed Rod Length measurement listed in the table below.
- Standard U-Bolt Dead-Ends include left-hand lay retaining rods. Custom U-Bolt Dead-Ends with right-hand lay retaining rods are available. Contact PLP with OPGW specifications for further information.

FIBERLIGN U-Bolt Dead-End

Catalog Number	Cable Diameter Range		U-Bolt Diameter	Overall Rod Length		Rods per Set	Subsets	Color Code	Component's Rated Strength	Exposed Rod Length for VORTX™ Damper Placement "L"	
	in	mm		in	mm				lb	in	mm
280110266	0.358 – 0.374	9.1 – 9.5	5/8	24	610	9	3-3-3	Blue	25,000	21	533
2801300	0.375 – 0.391	9.6 – 9.9	5/8	24	610	9	3-3-3	Pink	25,000	21	533
2801301	0.392 – 0.410	10.0 – 10.3	5/8	24	610	9	3-3-3	Pink	25,000	21	533
2801302	0.411 – 0.425	10.4 – 10.7	5/8	26	660	10	3-3-4	White	25,000	23	584
2801303	0.426 – 0.443	10.8 – 11.2	5/8	26	660	10	3-3-4	White	25,000	23	584
2801304	0.444 – 0.460	11.3 – 11.6	5/8	27	686	10	3-3-4	Brown	25,000	24	609
2801305	0.461 – 0.477	11.7 – 12.0	5/8	27	686	10	3-3-4	Brown	25,000	24	609
2801306	0.478 – 0.494	12.1 – 12.5	5/8	29	737	11	3-4-4	Purple	25,000	26	660
2801307	0.495 – 0.511	12.6 – 12.9	5/8	29	737	11	3-4-4	Purple	25,000	26	660
2801308	0.512 – 0.528	13.0 – 13.3	5/8	31	787	12	3-3-3-3	Yellow	25,000	28	711
2801309	0.529 – 0.545	13.4 – 13.8	5/8	31	787	12	3-3-3-3	Yellow	25,000	28	711
2801310	0.546 – 0.562	13.9 – 14.2	5/8	32	813	12	3-3-3-3	Blue	25,000	29	737
2801311	0.563 – 0.579	14.3 – 14.6	5/8	32	813	12	3-3-3-3	Blue	25,000	29	737
2801312	0.580 – 0.596	14.7 – 15.1	5/8	34	864	12	3-3-3-3	Orange	25,000	31	787
2801313	0.597 – 0.613	15.2 – 15.5	5/8	34	646	12	3-3-3-3	Orange	25,000	31	787
2801314	0.614 – 0.630	15.6 – 15.9	5/8	36	914	11	3-4-4	Red	25,000	33	838
2801315	0.631 – 0.647	16.0 – 16.4	5/8	36	914	11	3-4-4	Red	25,000	33	838
2801316	0.648 – 0.664	16.5 – 16.9	5/8	38	965	12	3-3-3-3	Black	25,000	35	889
2801317	0.665 – 0.681	17.0 – 17.2	5/8	38	965	12	3-3-3-3	Black	25,000	35	889
2801318	0.682 – 0.698	17.3 – 17.7	5/8	40	1,016	12	3-3-3-3	Green	25,000	37	938
2801319	0.699 – 0.715	17.8 – 18.0	5/8	40	1,016	12	3-3-3-3	Green	25,000	37	938
2801320	0.716 – 0.732	18.1 – 18.5	5/8	41	1,041	12	3-3-3-3	Brown	25,000	38	965
2801321	0.733 – 0.749	18.6 – 18.9	5/8	41	1,041	12	3-3-3-3	Brown	25,000	38	965
2801322	0.750 – 0.766	19.0 – 19.4	3/4	59	1,499	12	3-3-3-3	Purple	45,000	56	1,422
2801323	0.767 – 0.783	19.5 – 19.8	3/4	59	1,499	12	3-3-3-3	Purple	45,000	56	1,422
2801324	0.784 – 0.800	19.9 – 20.2	3/4	64	1,626	12	3-3-3-3	Yellow	45,000	61	1,549
2801325	0.801 – 0.817	20.3 – 20.7	3/4	64	1,626	12	3-3-3-3	Yellow	45,000	61	1,549
2801326	0.818 – 0.834	20.8 – 21.1	3/4	66	1,676	13	3-3-3-4	Blue	45,000	63	1,600
2801327	0.835 – 0.851	21.2 – 21.5	3/4	66	1,676	13	3-3-3-4	Blue	45,000	63	1,600
2801328	0.852 – 0.868	21.6 – 22.0	3/4	70	1,778	12	3-3-3-3	Orange	45,000	67	1,701
2801329	0.869 – 0.885	22.1 – 22.4	3/4	70	1,778	12	3-3-3-3	Orange	45,000	67	1,701
2801330	0.886 – 0.902	22.5 – 22.8	3/4	72	1,829	12	3-3-3-3	Red	45,000	69	1,753
2801331	0.903 – 0.919	22.9 – 23.2	3/4	72	1,829	12	3-3-3-3	Red	45,000	69	1,753
2801332	0.920 – 0.936	23.3 – 23.8	3/4	74	1,880	13	3-3-3-4	Black	45,000	71	1,803

FIBERLIGN® FORMED WIRE DEAD-END

The **FIBERLIGN Formed Wire Dead-End** uses two helically shaped formed wire components: an inner layer of structural reinforcing rods (SRR) and an outer-layer dead-end component to distribute axial and compressive loads over the applied area of the OPGW. The distribution of these loads reduces stresses on the central core and optical fibers of the OPGW.

FEATURES AND BENEFITS

- Standard Formed Wire Dead-Ends include right-hand lay SRR and a left-hand lay dead-end component
- A current transfer tab is included to provide a direct electrical bond between the OPGW and ground lead
- Current transfer tab is captured between the OPGW and the SRR. No additional fasteners are needed
- Current transfer tab has a hole diameter that accommodates a standard 1/2"-13 UNC bolt for compatible ground terminal attachments
- Thimble clevis is provided with each standard assembly to ensure proper long-term performance and support
- An optional ground wire assembly can be included with the formed wire dead-end
- SRR and dead-end components can only be reused once for retensioning after initial installation. Hardware components of the dead-end can be reused if they are in good condition
- Dead-end components are made of corrosion-resistant materials
- The FIBERLIGN Formed Wire Dead-End has been thoroughly tested for vibration, mechanical loading, and optical attenuation in accordance with IEEE Standard 1138 and IEEE Standard 1591.1

HOLDING STRENGTH

- Designed and tested in accordance with IEEE Std 1591.1
- Dependent on internal construction and composition of material used for individual strands of the OPGW
- Highest holding capabilities exist with cables that use all aluminum-clad steel strands in a single layer
- OPGW with multiple strand layers and/or aluminum alloy strands may reduce holding capabilities
- Contact PLP for Formed Wire Dead-End holding strengths for specific OPGW design

ATTACHMENT FITTINGS

- All standard Formed Wire Dead-Ends come with a thimble clevis **(Catalog Number: TC-6F)**
- A 14" Extension Link **(Catalog Number: LCE-66-14)** and/or an Anchor Shackle **(Catalog Number: AS-5L)** can be included with standard Formed Wire Dead-Ends

42,400 lb Thimble Clevis
(Catalog Number: TC-6F)

30,000 lb Anchor Shackle
(Catalog Number: AS-5L)

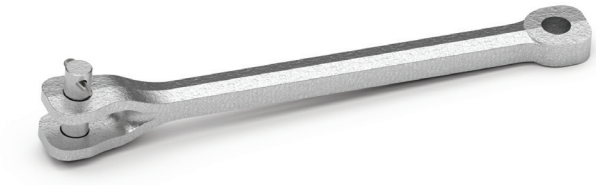

25,000 lb 14" Extension Link
(Catalog Number: LCE-66-14)

COMPONENTS

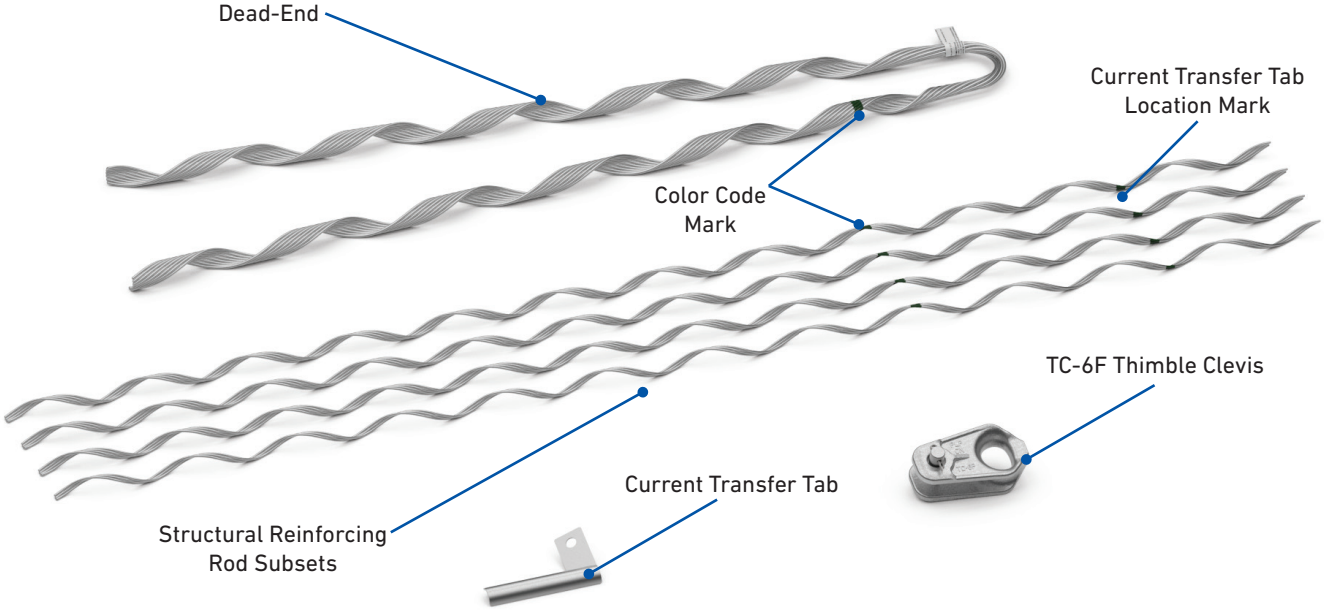

DIMENSIONS

Formed Wire Dead-End Assembly

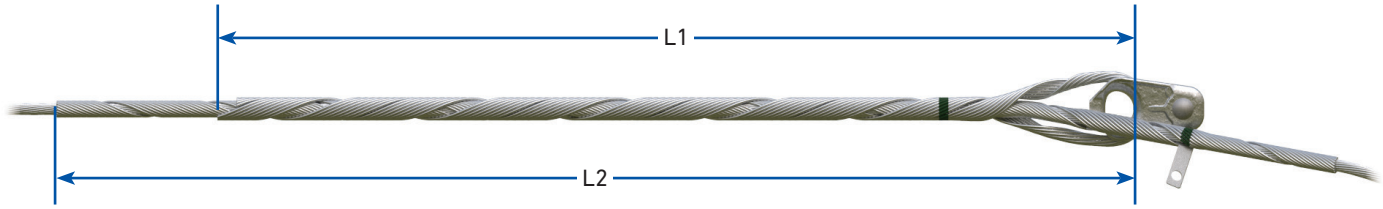

TC-6F Thimble Clevis

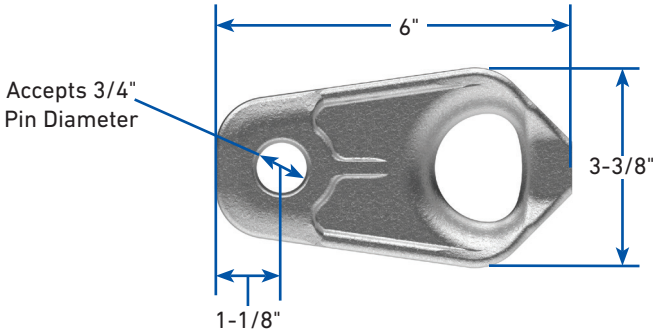

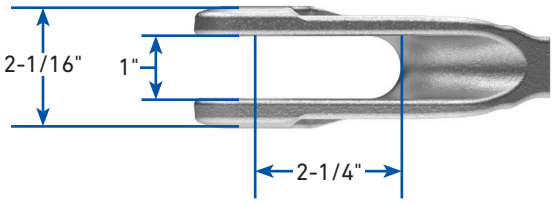

LCE-66-14 Extension Link

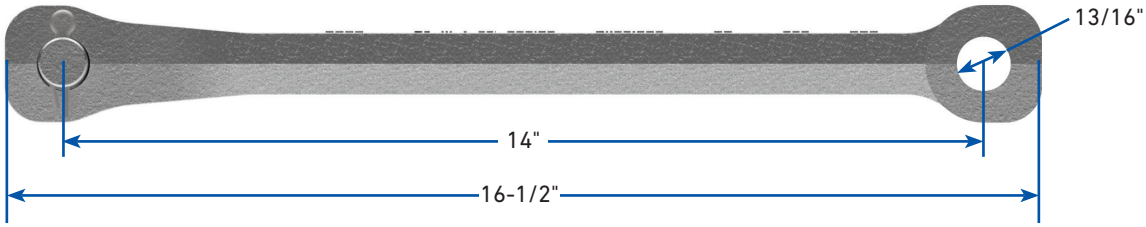

AS-5L Anchor Shackle

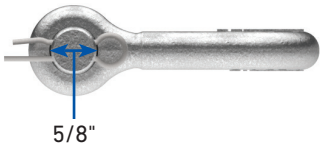

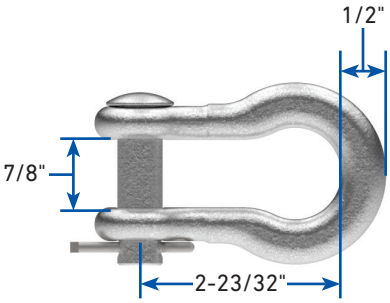

ACCESSORIES

- All ground wire assemblies include attachment hardware (bolts, lock washers, nuts) for each terminal
- For lattice tower applications, a light duty lattice tower clamp **(Catalog Number: LTC-2)** is available to attach a ground wire assembly with a bolt hole for either 1/2" or M12 bolts directly to the lattice tower

Catalog Number	Suffix Code	Description
710010015	G	4 ft (1.2 m) Long #4 (7W) Copper Ground Wire Assembly with One Terminal for 1/2" Bolt
710010293	GA	4 ft (1.2 m) Long 4/0 (7W) Aluminum Ground Wire Assembly with One Terminal for 1/2" Bolt
710011205	GA2	5 ft (1.5 m) Long 95 mm² (19W) Aluminum Ground Wire Assembly with One Terminal for M12 Bolt and One Terminal for M16 Bolt
710012417	–	5 ft (1.5 m) Long 4/0 (19W) Aluminum Ground Wire Assembly with One Terminal for M12 Bolt and One Terminal for M18 Bolt
LCE-66-14	E2	25,000 lb 14" Extension Link
AS-5L	S2	30,000 lb Anchor Shackle
LTC-2	–	Light Duty Lattice Tower Clamp

ORDERING INFORMATION

- Select the appropriate catalog number for the dead-end from the table below based on the diameter of the OPGW.
- Standard catalog numbers for Formed Wire Dead-Ends have the suffix code **C4** to include a Thimble Clevis and Extension Link with the dead-end.
- Add the appropriate suffix code(s) to the standard dead-end catalog number shown in the table below to include attachment fittings and/or a ground wire assembly **(ex: Catalog Number: 2890001C4G, 2890001C4E2GA, or 2890001C4E2S2GA2)** – See ACCESSORIES above for suffix codes.
- When adding suffix codes to the dead-end catalog number, make sure that the suffix code sequence is extension link, anchor shackle, then ground wire assembly. **NOTE:** An extension link is necessary before adding an anchor shackle in order to provide proper OPGW cable clearance.
- Refer to the image of the Formed Wire Dead-End under DIMENSIONS on the previous page for the measurements listed in the table below for VORTX™ Damper placement
- Rated holding strengths for the Formed Wire Dead-Ends listed in the chart below are based on OPGW with left-hand lay all aluminum-clad steel strands in a single layer.
- Formed Wire Dead-Ends for right-hand lay OPGW are available. Contact PLP with OPGW specifications for further information.

FIBERLIGN Formed Wire Dead-End

Catalog Number	Cable Diameter Range		Color Code	Component Rated Strength	Overall SRR Length		Useful Measurements for VORTX Damper Placement		
							SRR Rod Diameter	Dead-End Component Length "L1"	Partial SRR Length "L2"
	in	mm		lb	in	m	in (mm)	in (m)	in (m)
2890020C4	0.355 – 0.399	9.0 – 10.1	Pink	20,000	44	1.12	.114 (2.9)	34 (0.86)	37.0 (0.94)
2890001C4	0.400 – 0.449	10.2 – 11.4	Blue	20,000	49	1.24	.114 (2.9)	36 (0.91)	40.5 (1.03)
2890002C4	0.450 – 0.504	11.5 – 12.8	Red	25,000	54	1.37	.114 (2.9)	39 (0.99)	45.0 (1.14)
2890003C4	0.505 – 0.555	12.9 – 14.1	Orange	25,000	58	1.47	.114 (2.9)	42 (1.07)	47.5 (1.21)
2890004C4	0.556 – 0.610	14.2 – 15.5	Black	25,000	63	1.60	.128 (3.2)	45 (1.14)	51.5 (1.31)
2890005C4	0.611 – 0.680	15.6 – 17.2	Green	25,000	68	1.73	.128 (3.2)	49 (1.24)	56.0 (1.42)
2890006C4	0.681 – 0.755	17.3 – 19.1	Pink	25,000	85	2.16	.144 (3.7)	64 (1.63)	71.5 (1.82)
2890007C4	0.756 – 0.830	19.2 – 21.1	Yellow	25,000	91	2.31	.144 (3.7)	68 (1.73)	76.0 (1.93)
2890008C4	0.831 – 0.925	21.2 – 23.5	Brown	25,000	98	2.49	.144 (3.7)	73 (1.85)	81.5 (2.07)
2890009C4	0.926 – 1.030	23.6 – 26.2	Purple	25,000	107	2.72	.144 (3.7)	79 (2.01)	89.5 (2.27)

FIBERLIGN® BOLTED DEAD-END

The **FIBERLIGN Bolted Dead-End** for Optical Ground Wire (OPGW) secures both left and right hand lay stranded cables and is rated up to 25,000 lb holding strength. The unique keeper design allows for a compact application length with only three keepers required up to the maximum rated holding strength. Breakaway shear head bolts limit torque to ensure proper installation compression on the OPGW cable.

FEATURES AND BENEFITS

- Elastomer cushions at the cable entry keeper and at the downguide clamp are designed to reduce strain and fatigue due to cable motion
- Unique keeper achieves rated holding strength with a standard three keeper design - reducing the number of keepers and bolts required
- Shear head bolts are designed to ensure proper compressive force
- Made from high-strength aluminum
- End caps with elastomer inserts guard against abrasion, wear, and fatigue at both cable entry and downguide exit
- Color/shape codes provide easy identification for warehouse stock and field inspection verification

HOLDING STRENGTH

- Holding strength meets 95% cable rated break strength in accordance with IEEE Std 1591.1
- Contact PLP for multi-strand layered OPGW designs or designs that exceed 25,000 lb RBS to verify rated holding strength.

ATTACHMENT FITTINGS

- Bolted Dead-Ends can be attached to poles or structures with an extension strap (**Catalog Number: ES-30-10**), two anchor shackles (**Catalog Number: AS-5L**), and a chain link (**Catalog Number: CL-30**).
- Consult PLP for installation using other attachment fittings.

30,000 lb Extension Strap - 10"
(**Catalog Number: ES-30-10**)

30,000 lb Anchor Shackle
(**Catalog Number: AS-5L**)

30,000 lb Chain Link
(**Catalog Number: CL-30**)

COMPONENTS

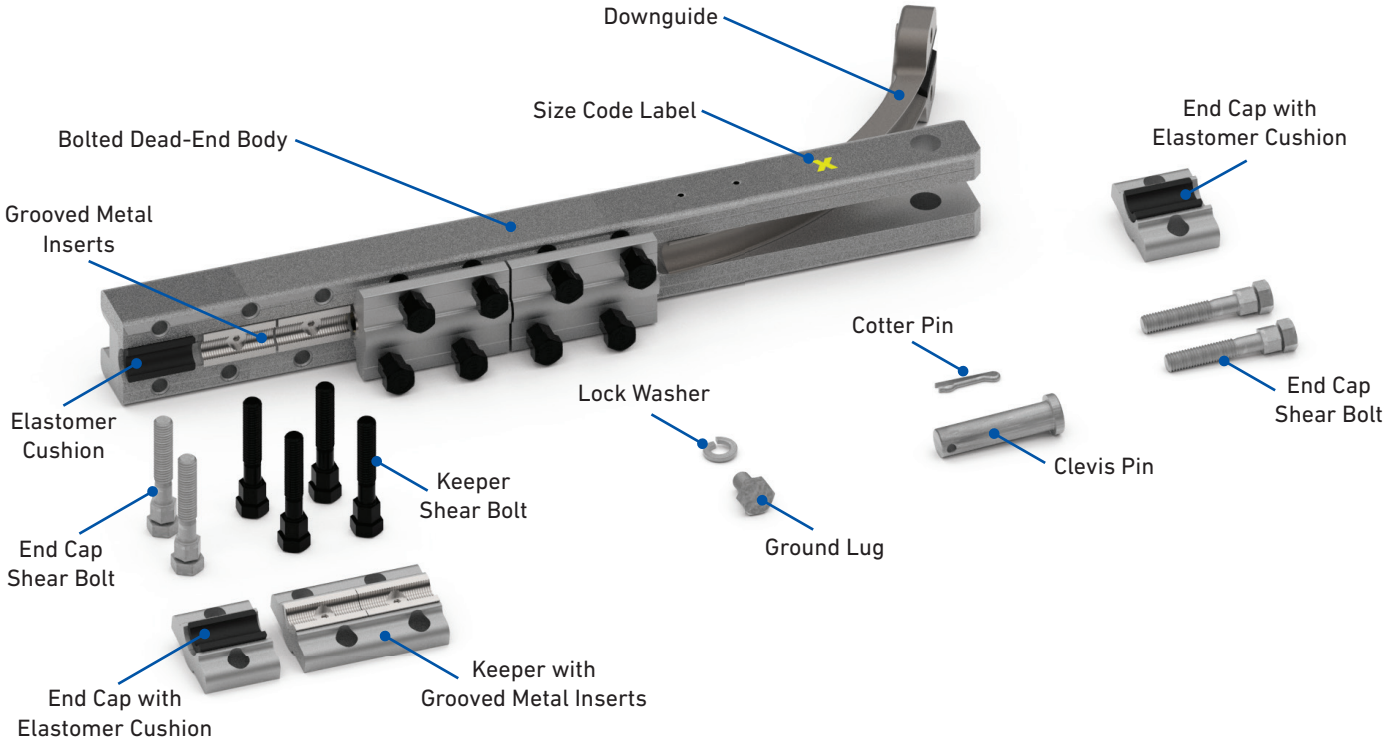

DIMENSIONS

FIBERLIGN Bolted Dead-End Assembly

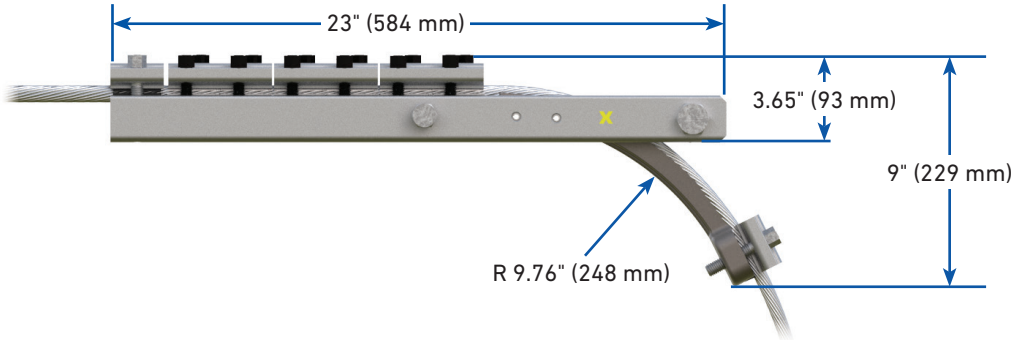

ACCESSORIES

Catalog Number	Description
710010016	4 ft (1.2 m) Long #4 (7W) Copper Ground Wire Assembly with One Terminal for 1/2" Bolt
710010294	4 ft (1.2 m) Long 4/0 (7W) Aluminum Ground Wire Assembly with One Terminal for 1/2" Bolt
710011205	5 ft (1.5 m) Long 95 mm² (19W) Aluminum Ground Wire Assembly with One Terminal for M12 Bolt and One Terminal for M16 Bolt – Includes bolts, washers, lock washers, and hex nuts for each terminal
ES-30-10	30,000 lb Extension Strap - 10" Length
AS-5L	30,000 lb Anchor Shackle
CL-30	30,000 lb Chain Link

4 ft (1.2 m) Long #4 (7W) Copper Ground Wire Assembly
(Catalog Number: 710010016)

4 ft (1.2 m) Long 4/0 (7W) Aluminum Ground Wire Assembly
(Catalog Number: 710010294)

5 ft (1.5 m) Long 95mm² (19W) Aluminum Ground Wire Assembly
(Catalog Number: 710011205)

ORDERING INSTRUCTIONS

- Select the appropriate catalog number for the bolted dead-end from the table below based on the diameter of the OPGW
- Standard kits include the downguide "DG" suffix. For applications that do not require the downguide, remove the "DG" suffix

FIBERLIGN Bolted Dead-Ends

Catalog Number		Cable Diameter Range				Size Code Label
		in		mm		
With Downguide	**Without Downguide**	Minimum	Maximum	Minimum	Maximum	Color/Shape
2900001DG	2900001	0.354	0.384	8.98	9.75	
2900002DG	2900002	0.384	0.422	9.75	10.7	S
2900003DG	2900003	0.422	0.453	10.7	11.5	
2900004DG	2900004	0.453	0.500	11.5	12.7	
2900005DG	2900005	0.500	0.540	12.7	13.7	X
2900006DG	2900006	0.540	0.563	13.7	14.3	#
2900007DG	2900007	0.563	0.583	14.3	14.5	
2900008DG	2900008	0.583	0.611	14.8	15.5	D
2900009DG	2900009	0.611	0.638	15.5	16.2	A
2900010DG	2900010	0.638	0.670	16.2	17.0	M
2900011DG	2900011	0.670	0.705	17.0	17.9	
2900012DG	2900012	0.705	0.750	17.9	19.0	P

SECTION 2

SUSPENSIONS & SUPPORTS

FIBERLIGN® OPGW HARDWARE

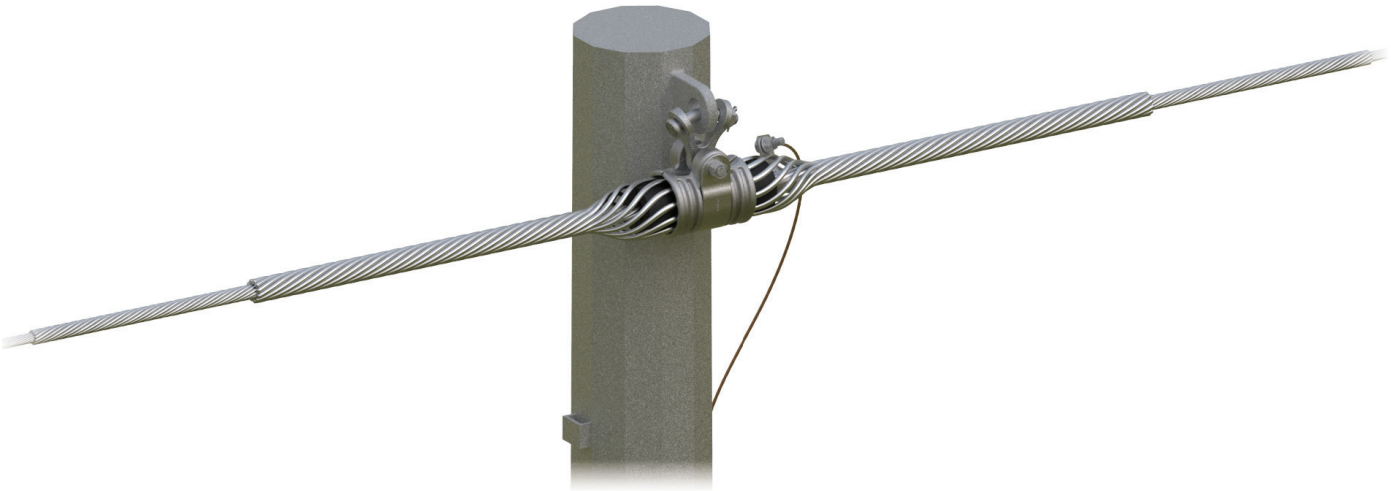

FIBERLIGN® SUSPENSION

The **FIBERLIGN Suspension** uses a combination of structural reinforcing rods (SRR), outer rods, housing halves, and resilient inserts to reduce compression, clamping, and bending stresses on OPGW and the optical fibers within it.

FEATURES AND BENEFITS

- Reduces negative effects of wind-induced cable motion, such as aeolian vibration, galloping, and sway
- Housing halves are captured by the aluminum strap for a low-stress assembly and suspended by a single galvanized steel bolt, washer, and locknut connection to prevent compression stress
- Inserts are made from an elastomer that is specifically formulated to resist deterioration from UV, weathering, extreme temperature variations, and compression set
- An aluminum alloy reinforcement is molded into each insert half for extreme loading
- A current transfer tab is included with all standard suspensions to provide a direct electrical bond between the OPGW and a ground lead
- The current transfer tab is captured between the outer rods of the OPGW and the SRR, simplifying installation as no fasteners are required and over torquing is avoided
- Housing assembly, SRR, and outer rods are made from a high-strength aluminum alloy
- An optional ground wire assembly can be included with the suspension
- SRR and outer rods cannot be reused. Hardware components can be reused if they are in good condition
- The FIBERLIGN Suspension has been thoroughly tested for vibration, mechanical loading, and optical attenuation in accordance with IEEE Standard 1138 and IEEE Standard 1591.1

HOLDING STRENGTHS AND LINE ANGLES

Characteristic	Specification
Unbalanced/Slip Load	10% – 20% of standard OPGW rated strength
Maximum Vertical Load	Varies per suspension assembly (Consult suspension dimensional chart for specific ratings)
Maximum Line Angle	30 degrees for single suspension; 60 degrees for double suspension

ATTACHMENT FITTINGS

- An Anchor Shackle **(Catalog Number: AS-5L)** can be included with standard single or double suspensions
- A Y-Clevis or Clevis Eye can be included with standard single suspensions. Y-Clevis and Clevis Eye catalog numbers are dependent on the suspension's cable diameter
- A Yoke Plate with two Clevis Eyes can be included with standard double suspensions. Yoke Plate and Clevis Eye catalog numbers are dependent on the suspension's cable diameter

30,000 lb Anchor Shackle
(Catalog Number: AS-5L)

Y-Clevis

Clevis Eye

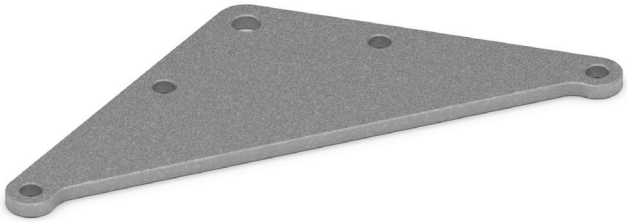

Yoke Plate

COMPONENTS

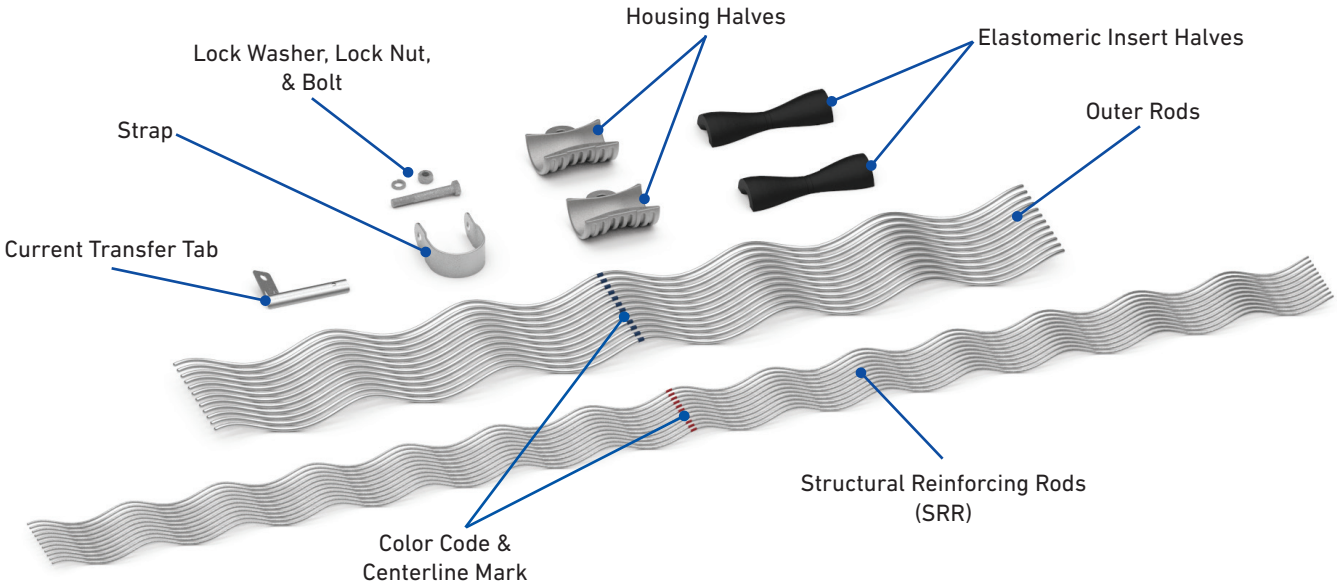

DIMENSIONS

Single Suspension

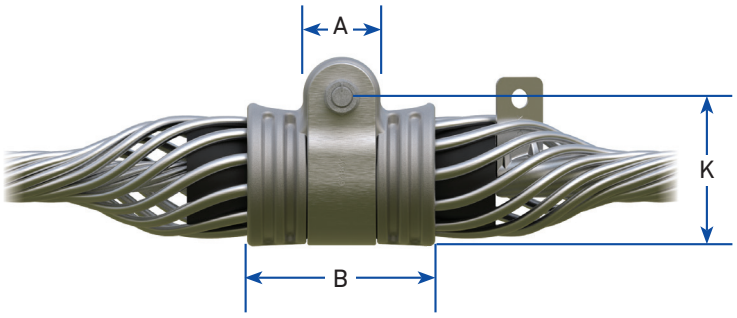

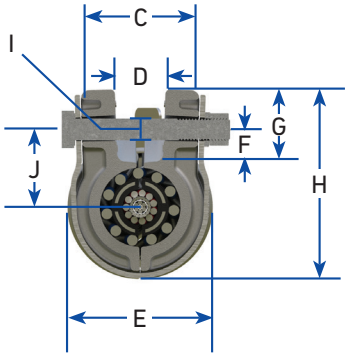

Current Transfer Tab

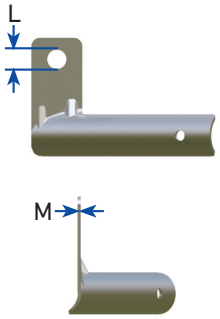

FIBERLIGN Single Suspension

Cable Diameter Range	Dimensions in (mm)													Maximum Vertical Load
in (mm)	A	B	C	D	E	F	G	H	I	J	K	L	M	lb
0.354 – 0.458 (9.0 – 11.6)	1-3/4 (44.5)	3-3/4 (95.3)	2-1/4 (57.2)	3/4 (19.1)	2-3/16 (55.6)	1 (25.4)	1-7/8 (47.6)	4-7/16 (112.7)	5/8 (15.9)	2-5/32 (54.8)	3-9/16 (90.5)	9/16 (14.3)	3/32 (2.3)	15,000
0.459 – 0.565 (11.7 – 14.3)	2 (50.8)	4-17/32 (115.1)	2-11/16 (68.3)	7/8 (22.2)	3-5/16 (84.1)	1 (25.4)	2 (50.8)	5 (127.0)	5/8 (15.9)	2-11/32 (59.5)	4 (101.6)	9/16 (14.3)	3/32 (2.3)	20,000
0.566 – 0.625 (14.4 – 15.8)	2 (50.8)	5 (127.0)	2-15/16 (74.6)	7/8 (22.2)	3-11/16 (93.7)	1 (25.4)	2 (50.8)	5-3/8 (136.5)	5/8 (15.9)	2-17/32 (64.3)	4-3/8 (111.1)	9/16 (14.3)	3/32 (2.3)	20,000
0.626 – 0.750 (15.9 – 19.9)	2-1/4 (57.2)	5-1/2 (139.7)	3-1/2 (88.9)	1-3/16 (30.2)	4-5/32 (105.6)	1 (25.4)	2-1/8 (54.0)	5-29/32 (150.0)	5/8 (15.9)	2-23/32 (68.7)	4-25/32 (121.4)	9/16 (14.3)	3/32 (2.3)	25,000
0.751 – 0.786 (20.0 – 24.8)	2-1/4 (57.2)	5-1/2 (139.7)	3-1/2 (88.9)	1-3/16 (30.2)	4-5/32 (105.6)	1 (25.4)	2-1/8 (54.0)	5-29/32 (150.0)	5/8 (15.9)	2-23/32 (68.7)	4-25/32 (121.4)	5/8 (15.9)	3/16 (4.8)	25,000
0.787 – 0.977 (20.0 – 24.8)	2-1/4 (57.2)	6 (152.4)	3-5/8 (92.1)	1-1/4 (31.8)	4-13/16 (122.2)	1-1/4 (31.8)	2-3/8 (60.3)	6-11/16 (169.9)	3/4 (19.1)	3-5/32 (80.2)	5-9/16 (141.3)	5/8 (15.9)	3/16 (4.8)	25,000

Double Suspension

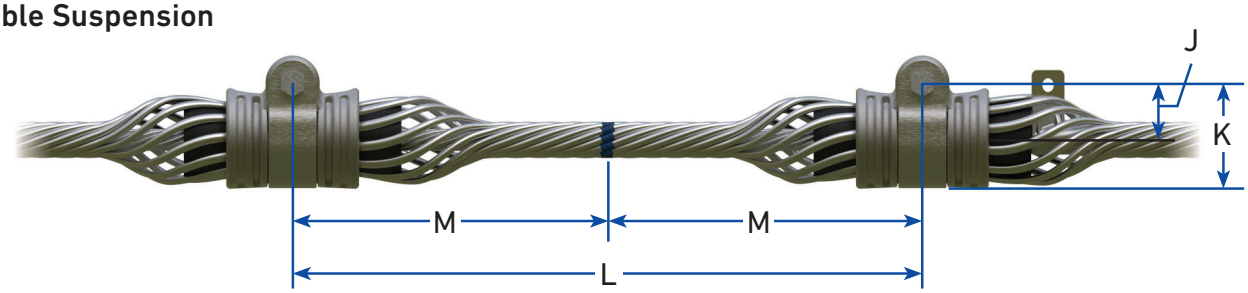

FIBERLIGN Double Suspension

Cable Diameter Range		Dimensions in (mm)				Maximum Vertical Load
in	mm	J	K	L	M	lb
0.354 – 0.458	9.0 – 11.6	2-5/32 (54.8)	3-9/16 (90.4)	18 (457.2)	9 (228.6)	30,000
0.459 – 0.565	11.7 – 14.3	2-11/32 (59.5)	4 (101.6)	18 (457.2)	9 (228.6)	40,000
0.566 – 0.625	14.4 – 15.8	2-17/32 (64.3)	4-3/8 (111.1)	22 (558.8)	11 (279.4)	40,000
0.626 – 0.786	15.9 – 19.9	2-23/32 (68.7)	4-25/32 (121.4)	26 (660.4)	13 (330.2)	50,000
0.787 – 0.855	20.0 – 21.6	3-5/32 (80.2)	5-9/16 (141.3)	29 (736.6)	14-1/2 (368.3)	50,000
0.856 – 1.057	21.7 – 26.8	2-31/32 (75.4)	5-1/2 (139.7)	32 (812.8)	16 (406.4)	50,000

DIMENSIONS

Hardware Fittings

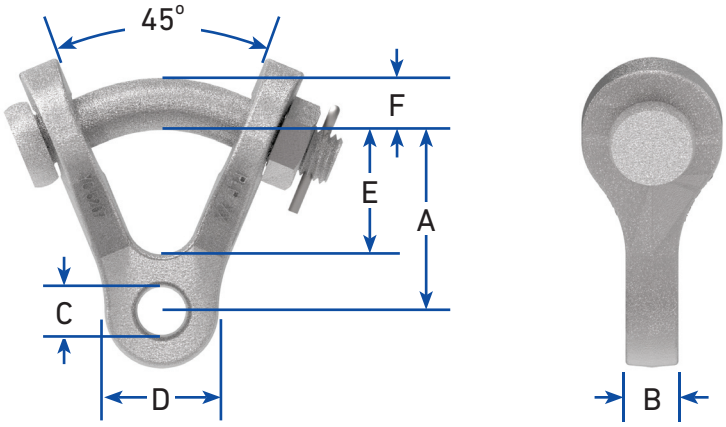

Y-Clevis Eye

Catalog Number	Cable Diameter Range		Dimensions in (mm)						Maximum Vertical Load
	in	mm	A	B	C	D	E	F	lb
YC-5206	0.354 – 0.458	9.0 – 11.6	2-7/16 (61.9)	5/8 (15.9)	11/16 (17.5)	1-5/8 (41.3)	1-5/8 (41.3)	3/4 (19.1)	15,000
YC-5207	0.459 – 0.625	11.7 – 15.9	2-7/16 (61.9)	3/4 (19.1)	11/16 (17.5)	1-5/8 (41.3)	1-5/8 (41.3)	3/4 (19.1)	20,000
YC-5209	0.626 – 1.057	16.0 – 26.8	2-7/16 (61.9)	1-1/16 (27.0)	13/16 (20.6)	1-5/8 (41.3)	1-5/8 (41.3)	3/4 (19.1)	25,000

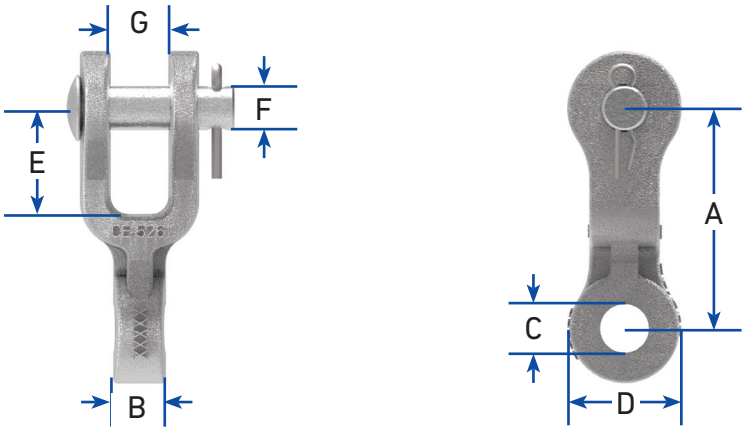

Clevis Eye

Catalog Number	Cable Diameter Range		Dimensions in (mm)							Maximum Vertical Load
	in	mm	A	B	C	D	E	F	G	lb
CE-5259	0.354 – 0.458	9.0 – 11.6	3-1/8 (79.4)	1/2 (12.7)	11/16 (17.5)	1-1/2 (38.1)	1-1/2 (38.1)	5/8 (15.9)	13/16 (20.6)	15,000
CE-5261	0.459 – 0.625	11.7 – 15.9	3-1/8 (79.4)	3/4 (19.1)	11/16 (17.5)	1-1/2 (38.1)	1-1/2 (38.1)	5/8 (15.9)	13/16 (20.6)	20,000
CE-5105	0.626 – 1.057	16.0 – 26.8	3-1/8 (79.4)	1-1/16 (27.0)	13/16 (20.6)	1-1/2 (38.1)	1-1/2 (38.1)	5/8 (15.9)	13/16 (20.6)	25,000

DIMENSIONS

Hardware Fittings

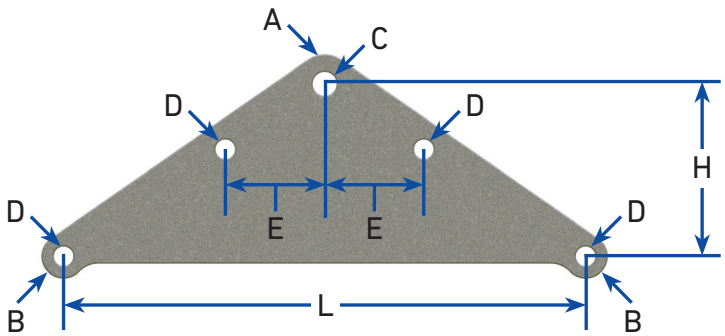

Yoke Plate

Catalog Number	Cable Diameter Range		Dimensions in (mm)							Plate Thickness
	in	mm	A (Radius)	B (Radius)	C (Dia.)	D (Dia.)	E	L	H	in (mm)
YP-5908	0.354 – 0.565	9.0 – 14.3	1-1/4 (31.8)	15/16 (23.8)	1 (25.4)	13/16 (20.6)	3-1/2 (88.9)	18 (457.2)	6-1/4 (158.8)	5/8 (15.9)
YP-5909	0.566 – 0.625	14.4 – 15.8	1-1/4 (31.8)	15/16 (23.8)	1" (25.4)	13/16 (20.6)	4-3/16 (106.4)	22 (558.8)	7-1/4 (184.2)	5/8 (15.9)
YP-5910	0.626 – 0.786	15.9 – 19.9	1-1/4 (31.8)	15/16 (23.8)	1 (25.4)	13/16 (20.6)	4-15/16 (125.4)	26 (660.4)	8-1/2 (215.9)	3/4 (19.1)
YP-5911	0.787 – 0.855	20.0 – 21.6	1-1/4 (31.8)	15/16 (23.8)	1 (25.4)	13/16 (20.6)	5-1/2 (139.7)	29 (736.6)	9-1/2 (241.3)	3/4 (19.1)
YP-5912	0.856 – 1.057	21.7 – 26.8	1-1/4 (31.8)	15/16 (23.8)	1 (25.4)	13/16 (20.6)	6-1/8 (155.6)	32 (812.8)	10-1/2 (266.7)	3/4 (19.1)

ACCESSORIES

- All ground wire assemblies include attachment hardware (bolts, lock washers, nuts) for each terminal
- See DIMENSIONS for specific catalog numbers for Y-Clevis Eyes, Clevis Eyes, and Yoke Plates

Catalog Number	Suffix Code	Description
710010015	G	4 ft (1.2 m) Long #4 (7W) Copper Ground Wire Assembly with One Terminal for 1/2" Bolt
710010293	GA	4 ft (1.2 m) Long 4/0 (7W) Aluminum Ground Wire Assembly with One Terminal for 1/2" Bolt
710011205	GA2	5 ft (1.5 m) Long 95 mm² (19W) Aluminum Ground Wire Assembly with One Terminal for M12 Bolt and One Terminal for M16 Bolt
AS-5L	S2	30,000 lb Anchor Shackle
See DIMENSIONS	YC	(1) Y-Clevis to match the selected single suspension
See DIMENSIONS	CE	(1) Clevis Eye to match the selected single suspension
See DIMENSIONS	CEYP	(2) Clevis Eyes and (1) Yoke Plate to match the selected double suspension

ORDERING INFORMATION

- Select the appropriate catalog number for the Suspension from the table below based on the diameter of the OPGW.
- Add the appropriate suffix code(s) to the Suspension catalog number to include a ground wire assembly and/or attachment fittings **(ex: Catalog Number: 4300100GYC, 4300100GACE, or 4300200GA2S2CEYP)** – see ACCESSORIES on the previous page for suffix codes.
- When adding suffix codes to the Suspension catalog number, make sure that the suffix code for the ground wire assembly comes **before** the suffix code(s) for the attachment fittings.
- Standard suspensions are offered for left-hand lay OPGW. Contact PLP with OPGW specifications for further information.

FIBERLIGN Suspension

Catalog Number		Cable Diameter Range		SRR Specifications						Outer Rod Specifications					
				Rod Length		Rod Diameter		Rods per Set	Color Code	Rod Length		Rod Diameter		Rods per Set	Color Code
Single	Double			Single	Double					Single	Double				
		in	mm	in (m)	in (m)	in	mm			in (m)	in (m)	in	mm		
4300100	4300200	0.354 – 0.381	9.0 – 9.6	66 (1.68)	84 (2.13)	0.146	3.7	9	Blue	42 (1.07)	60 (1.52)	0.204	5.2	11	Blue
4300101	4300201	0.382 – 0.398	9.7 – 10.0	66 (1.68)	84 (2.13)	0.146	3.7	9	Green	42 (1.07)	60 (1.52)	0.204	5.2	11	Green
4300102	4300202	0.399 – 0.418	10.1 – 10.5	66 (1.68)	84 (2.13)	0.146	3.7	10	Yellow	42 (1.07)	60 (1.52)	0.204	5.2	11	Yellow
4300103	4300203	0.419 – 0.439	10.6 – 11.1	67 (1.70)	84 (2.13)	0.146	3.7	10	Black	42 (1.07)	60 (1.52)	0.204	5.2	11	Black
4300104	4300204	0.440 – 0.458	11.2 – 11.6	68 (1.73)	84 (2.13)	0.146	3.7	11	White	43 (1.09)	61 (1.55)	0.204	5.2	11	White
4300105	4300205	0.459 – 0.461	11.6 – 11.7	72 (1.83)	90 (2.29)	0.167	4.2	10	Purple	46 (1.17)	64 (1.63)	0.250	6.4	10	Orange
4300106	4300206	0.462 – 0.476	11.7 – 12.0	72 (1.83)	90 (2.29)	0.167	4.2	10	Purple	46 (1.17)	64 (1.63)	0.250	6.4	10	Purple
4300107	4300207	0.477 – 0.503	12.1 – 12.7	72 (1.83)	90 (2.29)	0.146	3.7	11	Orange	46 (1.17)	64 (1.63)	0.250	6.4	10	Orange
4300108	4300208	0.504 – 0.511	12.8 – 12.9	73 (1.85)	90 (2.29)	0.146	3.7	12	Red	46 (1.17)	64 (1.63)	0.250	6.4	10	Purple
4300109	4300209	0.512 – 0.536	13.0 – 13.5	76 (1.93)	94 (2.39)	0.167	4.2	11	Blue	49 (1.24)	67 (1.70)	0.250	6.4	11	Blue
4300110	4300210	0.537 – 0.559	13.6 – 14.1	77 (1.96)	94 (2.39)	0.167	4.2	11	Green	49 (1.24)	67 (1.70)	0.250	6.4	11	Green
4300111	4300211	0.560 – 0.565	14.2 – 14.3	77 (1.96)	94 (2.39)	0.167	4.2	11	Green	49 (1.24)	67(1.70)	0.250	6.4	11	Green
4300112	4300212	0.566 – 0.573	14.4 – 14.5	79 (2.01)	102 (2.59)	0.182	4.6	11	Black	54 (1.37)	76 (1.93)	0.250	6.4	12	Black
4300113	4300213	0.574 – 0.598	14.6 – 15.1	79 (2.01)	102 (2.59)	0.182	4.6	11	Black	54 (1.37)	76 (1.93)	0.250	6.4	12	White
4300114	4300214	0.599 – 0.625	15.2 – 15.8	81 (2.06)	102 (2.59)	0.182	4.6	11	Brown	54 (1.37)	76 (1.93)	0.250	6.4	12	Brown
4300116	4300216	0.626 – 0.632	15.9 – 16.0	94 (2.39)	120 (3.05)	0.204	5.2	11	Red	63 (1.60)	89 (2.26)	0.310	7.9	11	Red
4300117	4300217	0.633 – 0.666	16.1 – 16.8	94 (2.39)	120 (3.05)	0.204	5.2	11	Red	63 (1.60)	89 (2.26)	0.310	7.9	11	Blue
4300118	4300218	0.667 – 0.682	16.9 – 17.2	94 (2.39)	120 (3.05)	0.204	5.2	11	Yellow	63 (1.60)	89 (2.26)	0.310	7.9	11	Green
4300119	4300219	0.683 – 0.710	17.3 – 18.0	94 (2.39)	120 (3.05)	0.204	5.2	11	Yellow	63 (1.60)	89 (2.26)	0.310	7.9	11	Yellow
4300120	4300220	0.711 – 0.728	18.1 – 18.4	94 (2.39)	120 (3.05)	0.204	5.2	12	White	63 (1.60)	89 (2.26)	0.310	7.9	12	Black
4300121	4300221	0.729 – 0.744	18.5 – 18.8	94 (2.39)	120 (3.05)	0.204	5.2	12	White	63 (1.60)	89 (2.26)	0.310	7.9	12	White
4300122	4300222	0.745 – 0.750	18.9 – 19.0	94 (2.39)	120 (3.05)	0.204	5.2	12	White	63 (1.60)	89 (2.26)	0.310	7.9	12	White
4300123	4300223	0.751 – 0.786	19.1 – 19.9	94 (2.39)	120 (3.05)	0.204	5.2	12	Brown	63 (1.60)	89 (2.26)	0.310	9.3	12	Brown
4300124	4300224	0.787 – 0.814	20.0 – 20.6	100 (2.54)	120 (3.05)	0.250	6.4	11	Green	72 (1.83)	101 (2.57)	0.365	9.3	11	Green
4300125	4300225	0.815 – 0.845	20.7 – 21.4	100 (2.54)	129 (3.28)	0.250	6.4	11	Yellow	72 (1.83)	101 (2.57)	0.365	9.3	11	Yellow
4300126	4300226	0.846 – 0.855	21.5 – 21.6	100 (2.54)	129 (3.28)	0.250	6.4	11	Blue	72 (1.83)	101 (2.57)	0.365	9.3	12	Blue
4300127	4300227	0.856 – 0.894	21.7 – 22.6	100 (2.54)	132 (3.35)	0.250	6.4	12	Black	80 (2.03)	112 (2.85)	0.365	9.3	12	Black
4300128	4300228	0.895 – 0.907	22.7 – 23.0	100 (2.54)	132 (3.35)	0.250	6.4	12	White	80 (2.03)	112 (2.85)	0.365	9.3	12	White
4300129	4300229	0.908 – 0.916	23.1 – 23.2	100 (2.54)	132 (3.35)	0.250	6.4	12	Purple	80 (2.03)	112 (2.85)	0.365	9.3	12	Purple
4300153	4300253	0.917 – 0.929	23.3 – 23.5	100 (2.54)	132 (3.35)	0.250	6.4	12	Brown	80 (2.03)	112 (2.85)	0.365	9.3	12	Brown
4300154	4300254	0.930 – 0.942	23.6 – 23.9	100 (2.54)	132 (3.35)	0.250	6.4	12	Red	80 (2.03)	112 (2.85)	0.365	9.3	12	Red
4300155	4300255	0.943 – 0.977	24.0 – 24.8	100 (2.54)	132 (3.35)	0.250	6.4	12	Orange	80 (2.03)	112 (2.85)	0.365	9.3	13	Orange

FIBERLIGN® CUSHION CLAMP

The **FIBERLIGN Cushion Clamp** uses a combination of structural reinforcing rods (SRR) and elastomer inserts at the ends of the clamp halves to protect the OPGW from damage at support points.

FEATURES AND BENEFITS

- Reduces negative effects of wind-induced cable motion, such as aeolian vibration, galloping, and sway
- Can accommodate either left-hand lay or right-hand lay OPGW
- A galvanized 1/2"-13 x 3/4" UNC bolt and lock washer are provided with one of the clamp halves to attach a ground wire assembly with a terminal lug to it for bonding OPGW to the supporting structure or a ground lead
- Each clamp half has two factory-installed elastomer cushion inserts to minimize stress at clamp ends
- Clamp halves have a machined central groove that ensures a proper fit and provides electrical continuity
- Clamp halves are secured with two captured 1/2"-13 galvanized steel U-bolts
- Clamp halves and SRR are high-strength aluminum alloy. Fastening hardware is galvanized steel.
- An optional ground wire assembly can be included with the cushion clamp
- SRR cannot be reused after they have been installed. Hardware components can be reused as desired if they are in good condition.
- The FIBERLIGN Cushion Clamp has been thoroughly tested for vibration, mechanical loading, and optical attenuation in accordance with IEEE Standard 1138 and IEEE Standard 1591.1

HOLDING STRENGTHS AND LINE ANGLES

Characteristic	Specification
Unbalanced/Slip Load	10%–20% of standard OPGW rated strength
Maximum Vertical Load	20,000 lb
Maximum Line Angle	30 degrees for single cushion clamp; 60 degrees for double cushion clamp

ATTACHMENT FITTINGS

- An Anchor Shackle **(Catalog Number: AS-5L)** can be included with Single or Double Cushion Clamps.
- A Y-Clevis **(Catalog Number: YC-5207)** or Clevis Eye **(Catalog Number: CE-5261)** can be included with Single Cushion Clamps.
- A Yoke Plate **(Catalog Number: YP-5909)** with two Clevis Eyes **(Catalog Number: CE-5261)** can be included with Double Cushion Clamps.

30,000 lb Anchor Shackle
(Catalog Number: AS-5L)

20,000 lb Y-Clevis Eye
(Catalog Number: YC-5207)

20,000 lb Clevis Eye
(Catalog Number: CE-5261)

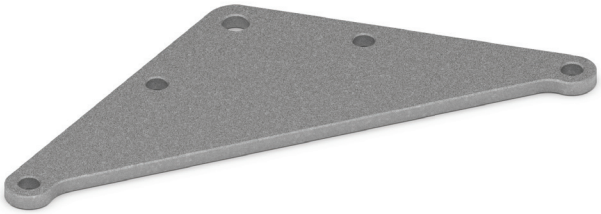

22" Yoke Plate
(Catalog Number: YP-5909)

COMPONENTS

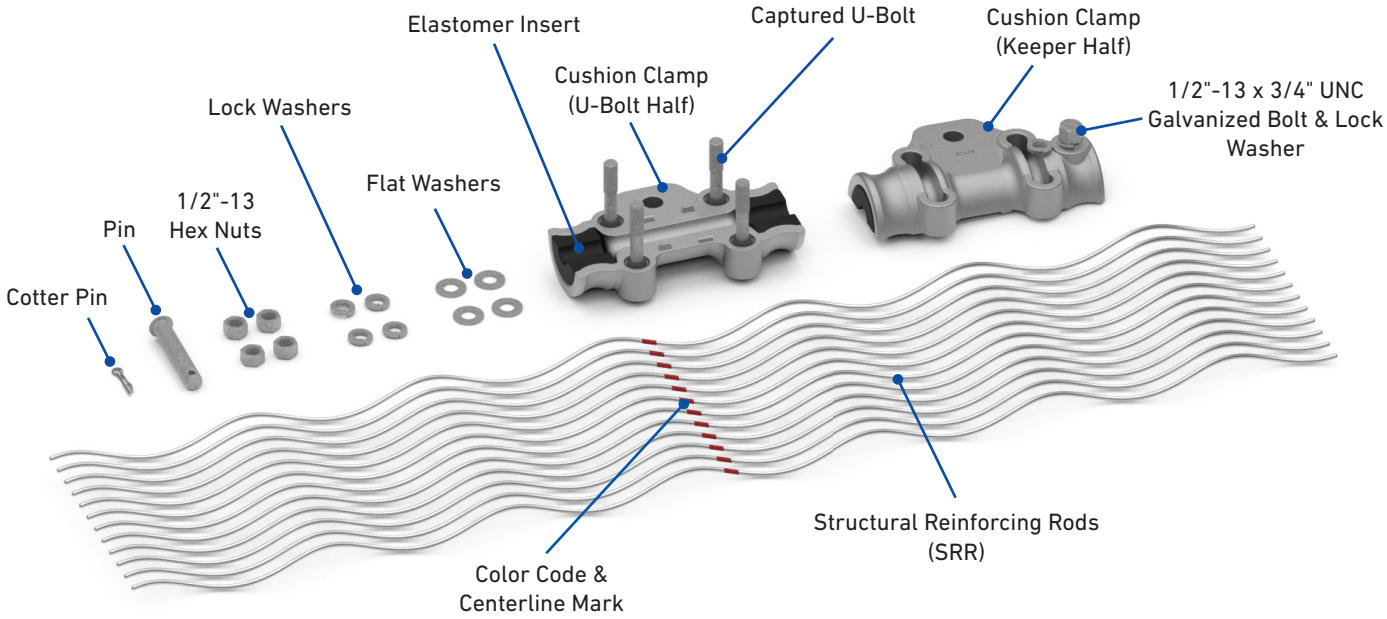

DIMENSIONS

Single Cushion Clamp

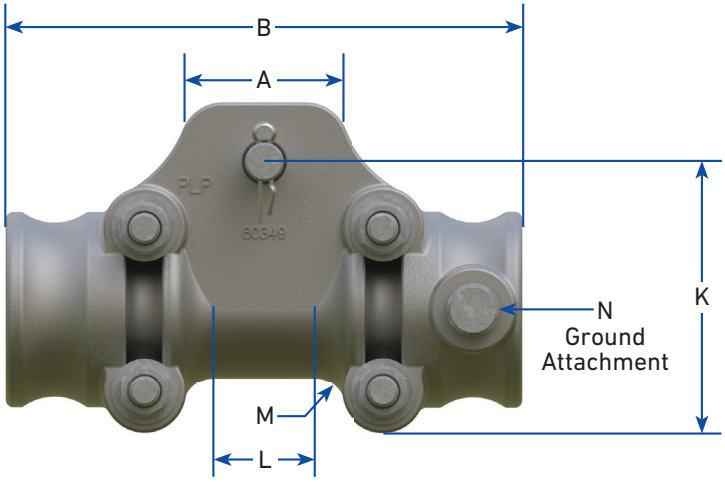

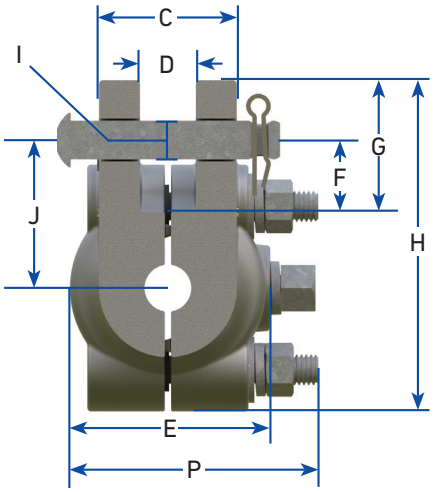

FIBERLIGN Single Cushion Clamp

Dimensions in (mm)															Maximum Vertical Load
A	B	C	D	E	F	G	H	I	J	K	L	M	N	P	lb
2-23/64 (59.9)	8-11/32 (211.9)	2-11/32 (59.5)	13/16 (20.6)	3-3/32 (79.0)	1-5/32 (29.4)	2-1/8 (54.0)	5-1/4 (133.4)	5/8 (15.9)	2-11/32 (59.5)	3-21/32 (92.5)	1-25/32 (45.2)	16/32 (12.3)	1/2-13 UNC	3-15/16 (100.0)	20,000

Double Cushion Clamp

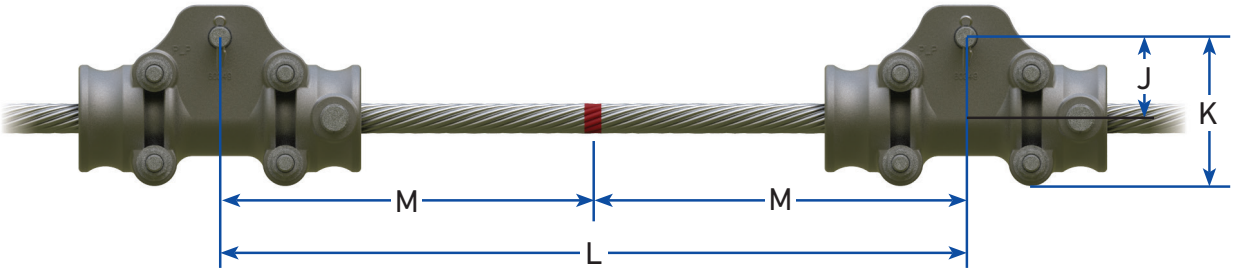

FIBERLIGN Double Cushion Clamp

Dimensions in (mm)				Maximum Vertical Load
J	K	L	M	lb
2-11/32 (59.5)	3-21/32 (92.5)	22 (558.8)	11 (279.4)	40,000

DIMENSIONS

Hardware Fittings

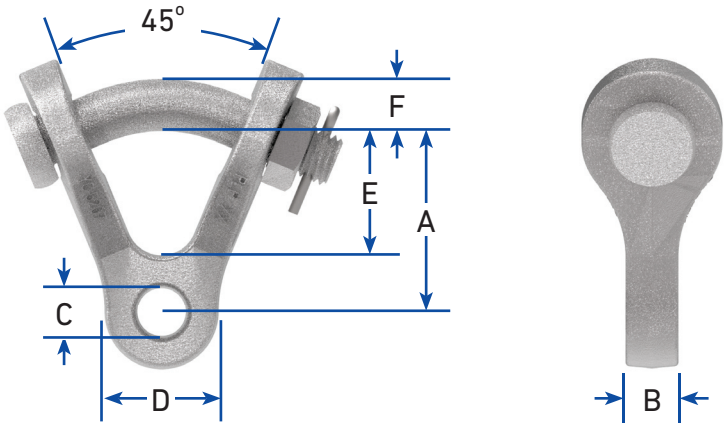

Y-Clevis Eye

Catalog Number	Dimensions in (mm)						Maximum Vertical Load
	A	B	C	D	E	F	lb
YC-5207	2-7/16 (61.9)	3/4 (19.1)	11/16 (17.5)	1-5/8 (41.3)	1-5/8 (41.3)	3/4 (19.1)	20,000

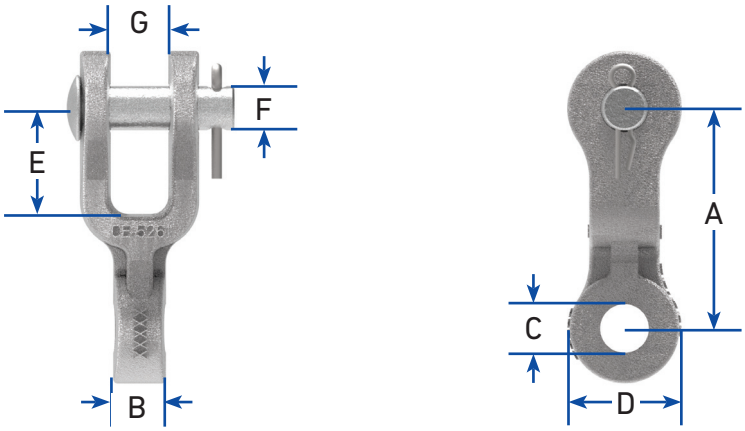

Clevis Eye

Catalog Number	Dimensions in (mm)							Maximum Vertical Load
	A	B	C	D	E	F	G	lb
CE-5261	3-1/8 (79.4)	3/4 (19.1)	11/16 (17.5)	1-1/2 (38.1)	1-1/2 (38.1)	5/8 (15.9)	13/16 (20.6)	20,000

DIMENSIONS

Hardware Fittings

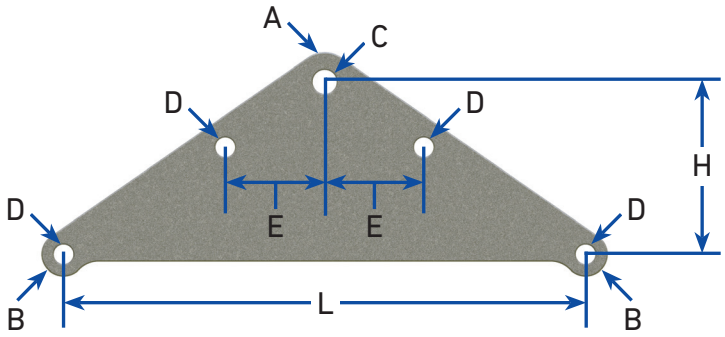

Yoke Plate

Catalog Number	Dimensions in (mm)							Plate Thickness	Maximum Vertical Load
	A (Radius)	B (Radius)	C (Dia.)	D (Dia.)	E	L	H	in (mm)	lb
YP-5909	1-1/4 (31.8)	15/16 (23.8)	1" (25.4)	13/16 (20.6)	4-3/16 (106.4)	22 (558.8)	7-1/4 (184.2)	5/8 (15.9)	40,000

ACCESSORIES

Catalog Number	Suffix Code	Description
710010016	G	4 ft (1.2 m) Long #4 (7W) Copper Ground Wire Assembly with One Terminal for 1/2" Bolt
710010294	GA	4 ft (1.2 m) Long 4/0 (7W) Aluminum Ground Wire Assembly with One Terminal for 1/2" Bolt
710011205	GA2	5 ft (1.5 m) Long 95 mm² (19W) Aluminum Ground Wire Assembly with One Terminal for M12 Bolt and One Terminal for M16 Bolt – Includes bolts, washers, lock washers, and hex nuts for each terminal
AS-5L	S2	30,000 lb Anchor Shackle
YC-5207	YC	20,000 lb Y-Clevis Eye
CE-5261	CE	20,000 lb Clevis Eye
CE-5261 (Qty 2)	CEYP	(2) 20,000 lb Clevis Eyes and (1) 40,000 lb 22" Yoke Plate - For Double Cushion Clamps only
YP-5909 (Qty 1)		

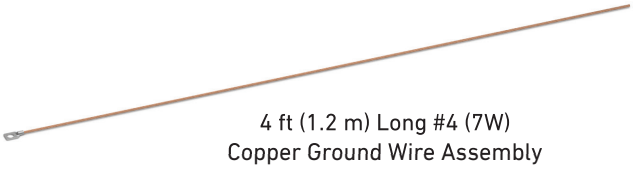

4 ft (1.2 m) Long #4 (7W)
Copper Ground Wire Assembly
(Catalog Number: 710010016, Suffix Code: G)

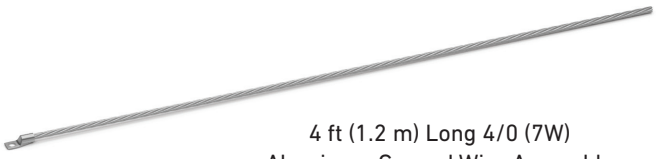

4 ft (1.2 m) Long 4/0 (7W)
Aluminum Ground Wire Assembly
(Catalog Number: 710010294, Suffix Code: GA)

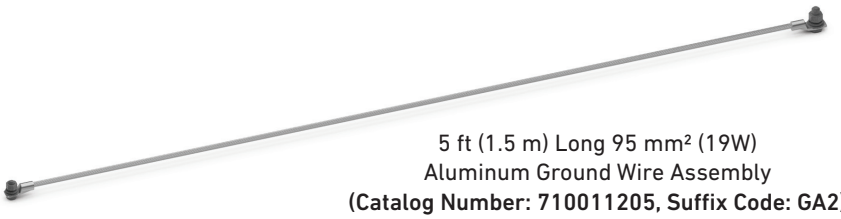

5 ft (1.5 m) Long 95 mm² (19W)
Aluminum Ground Wire Assembly
(Catalog Number: 710011205, Suffix Code: GA2)

ORDERING INFORMATION

- Select the appropriate catalog number for the Cushion Clamp from the table below based on the diameter of the OPGW.
- Add the appropriate suffix code(s) to the Cushion Clamp catalog number to include a ground wire assembly and/or attachment fittings **(ex: Catalog Number: 4700100GYC, 4700100GACE, or 4700100GA2S2CEYP)** – see ACCESSORIES on the previous page for suffix codes.
- When adding suffix codes to the Cushion Clamp catalog number, make sure that the suffix code for the ground wire assembly comes **before** the suffix code(s) for the attachment fittings

FIBERLIGN Cushion Clamp

Catalog Number		Cable Diameter Range		SRR Specifications					
				Rod Length		Rod Diameter		Rods per Set	Color Code
				Single	Double				
Single	Double	in	mm	in (m)	in (m)	in	mm		
4700100	4700200	0.376 – 0.387	9.6 – 9.8	31 (0.79)	60 (1.52)	0.204	5.2	7	Orange
4700101	4700201	0.388 – 0.429	9.9 – 10.9	32 (0.81)	61 (1.55)	0.182	4.6	8	Red
4700102	4700202	0.430 – 0.459	11.0 – 11.6	33 (0.84)	62 (1.57)	0.167	4.2	9	Black
4700103	4700203	0.460 – 0.482	11.7 – 12.2	34 (0.86)	63 (1.60)	0.154	3.9	10	Green
4700104	4700204	0.483 – 0.507	12.3 – 12.8	35 (0.89)	64 (1.63)	0.182	4.6	10	Yellow
4700105	4700205	0.508 – 0.537	12.9 – 13.6	36 (0.91)	65 (1.65)	0.167	4.2	11	Purple
4700106	4700206	0.538 – 0.563	13.7 – 14.3	37 (0.94)	66 (1.68)	0.154	3.9	12	Pink
4700107	4700207	0.564 – 0.585	14.4 – 14.8	39 (0.99)	68 (1.73)	0.182	4.6	11	Brown
4700108	4700208	0.586 – 0.615	14.9 – 15.6	40 (1.02)	69 (1.75)	0.167	4.2	12	Blue
4700109	4700209	0.616 – 0.641	15.7 – 16.3	41 (1.04)	70 (1.78)	0.154	3.9	13	Orange
4700110	4700210	0.642 – 0.664	16.4 – 16.8	44 (1.12)	73 (1.85)	0.182	4.6	12	Red
4700111	4700211	0.665 – 0.694	16.9 – 17.6	45 (1.14)	74 (1.88)	0.167	4.2	13	Black
4700112	4700212	0.695 – 0.720	17.7 – 18.3	46 (1.17)	75 (1.91)	0.154	3.9	15	Green
4700113	4700213	0.721 – 0.742	18.4 – 18.8	48 (1.22)	77 (1.96)	0.182	4.6	13	Yellow
4700114	4700214	0.743 – 0.772	18.9 – 19.6	50 (1.27)	79 (2.01)	0.167	4.2	14	Purple
4700115	4700215	0.773 – 0.798	19.7 – 20.2	51 (1.30)	80 (2.03)	0.154	3.9	15	Pink
4700116	4700216	0.799 – 0.822	20.3 – 20.8	52 (1.32)	81 (2.06)	0.182	4.6	14	Brown
4700117	4700217	0.823 – 0.855	20.9 – 21.7	54 (1.37)	83 (2.11)	0.167	4.2	16	Blue
4700118	4700218	0.856 – 0.885	21.8 – 22.4	55 (1.40)	84 (2.13)	0.146	3.7	19	Orange
4700119	4700219	0.886 – 0.911	22.5 – 23.1	56 (1.42)	85 (2.16)	0.167	4.2	16	Red
4700120	4700220	0.912 – 0.941	23.2 – 23.9	57 (1.45)	86 (2.18)	0.154	3.9	19	Black
4700121	4700221	0.942 – 0.975	24.0 – 24.7	58 (1.47)	87 (2.21)	0.146	3.7	20	Green
4700122	4700222	0.976 – 1.005	24.8 – 25.5	60 (1.52)	89 (2.26)	0.167	4.2	18	Yellow
4700123	4700223	1.006 – 1.034	25.6 – 26.3	61 (1.55)	90 (2.29)	0.154	3.9	20	Purple

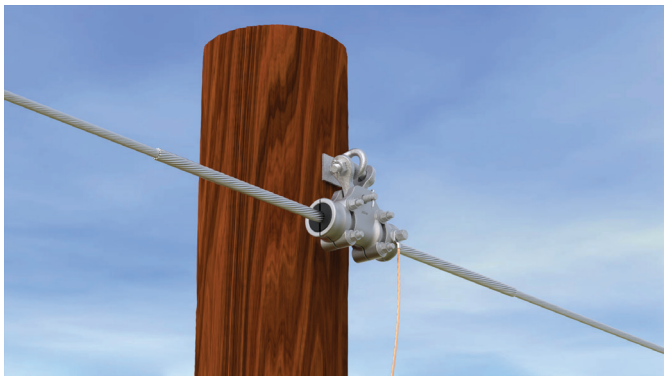

Single Cushion Clamp Attached to Wood Pole

Double Cushion Clamp Attached to Steel Pole

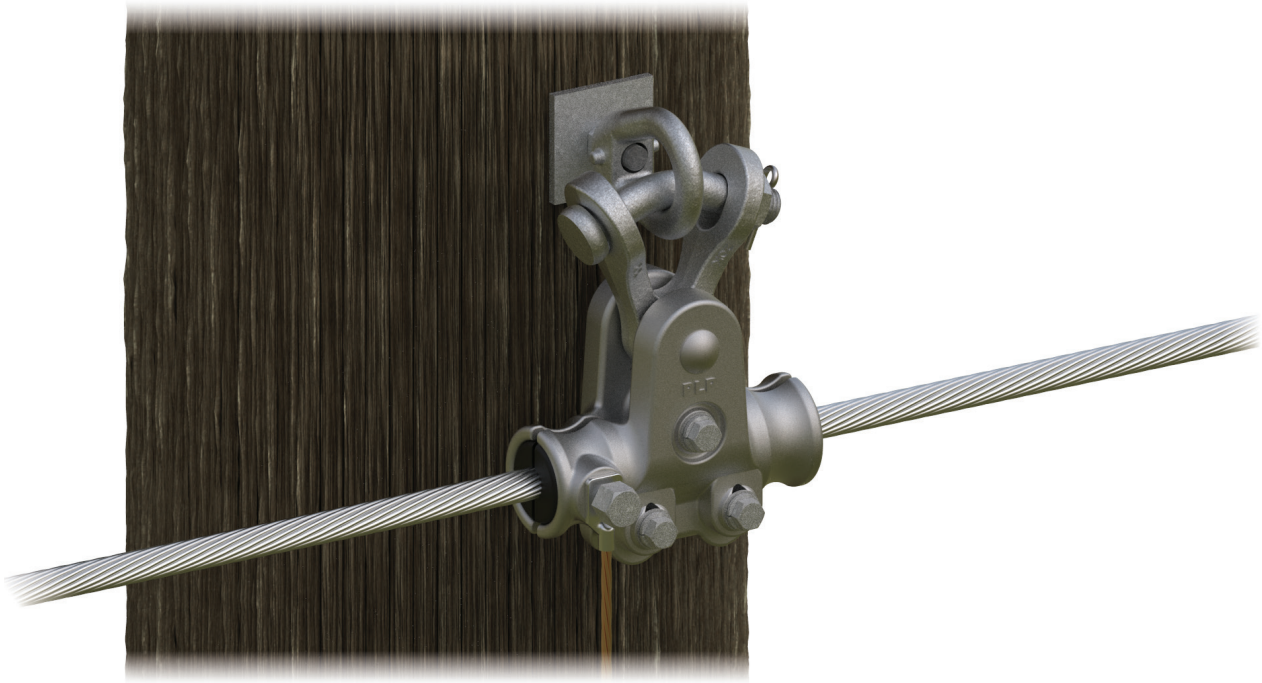

FIBERLIGN® EZ CUSHION SUSPENSION

The **FIBERLIGN EZ Cushion Suspension** uses elastomer inserts to reduce static and dynamic stresses at the support point in the OPGW system.

FEATURES AND BENEFITS

- Field-proven, elastomer cushion inserts guard against abrasion, wear, and fatigue
- Inserts have a unique hourglass shape that helps expand the angle rating to 30 degrees
- Structural reinforcing rods are not needed for installation; strain relief relies solely on the cushion inserts
- All fasteners are factory installed and captive, eliminating lost hardware in the field
- Fastener-retained housing halves allow the suspension to be installed over OPGW simply by loosening the captive fasteners and spreading the halves open
- Cushion-style suspension reduces dynamic strain levels on OPGW by 40% to 50% when compared to bare suspension clamps
- An optional ground wire assembly can be included with the suspension
- The FIBERLIGN EZ Cushion Suspension has been thoroughly tested for vibration, mechanical loading, and optical attenuation in accordance with IEEE Standard 1138 and IEEE Standard 1591.1

HOLDING STRENGTHS AND LINE ANGLES

Characteristic	Specification
Unbalanced/Slip Load	15%–20% of Standard OPGW Rated Strength up to 5,000 lb (89kN)
Maximum Vertical Load	20,000 lb
Maximum Line Angle	30 degrees for single suspension; 60 degrees for double suspension

ATTACHMENT FITTINGS

- An Anchor Shackle **(Catalog Number: AS-5L)** can be included with Single or Double Cushion Clamps.
- A Y-Clevis **(Catalog Number: YC-5207)** or Clevis Eye **(Catalog Number: CE-5261)** can be included with Single Cushion Clamps.
- A Yoke Plate **(Catalog Number: YP-5908)** with two Clevis Eyes **(Catalog Number: CE-5261)** can be included with Double Cushion Clamps.

30,000 lb Anchor Shackle
(**Catalog Number: AS-5L**)

20,000 lb Y-Clevis Eye
(**Catalog Number: YC-5207**)

20,000 lb Clevis Eye
(**Catalog Number: CE-5261**)

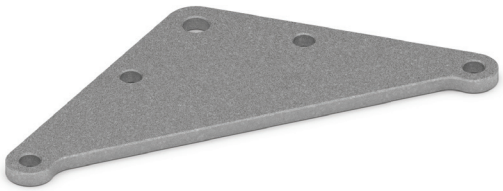

18" Yoke Plate
(**Catalog Number: YP-5908**)

COMPONENTS

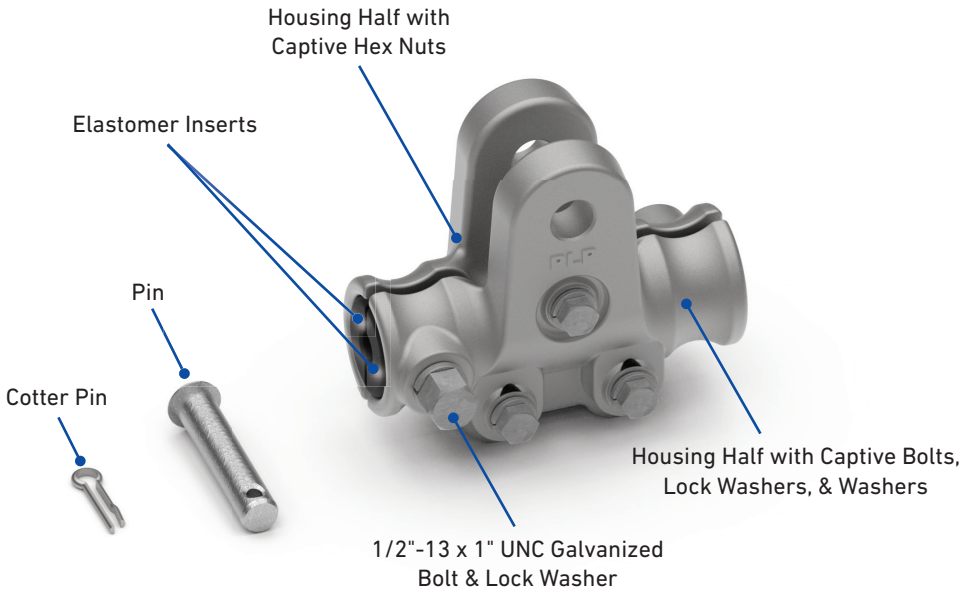

DIMENSIONS

Single EZ Cushion Suspension

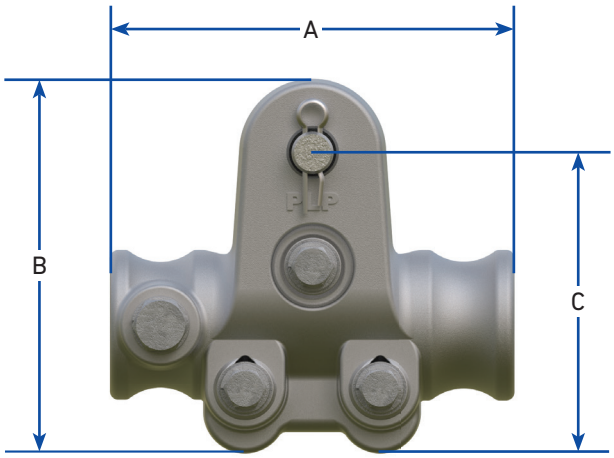

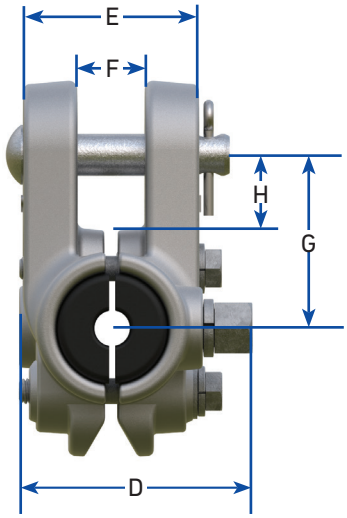

FIBERLIGN Single EZ Cushion Suspension

Dimensions in (mm)							
A	B	C	D	E	F	G	H
6 (152.4)	5-1/2 (139.7)	4-7/16 (112.7)	3-3/8 (85.7)	2-9/16 (65.1)	1 (25.4)	2-1/2 (63.5)	1-15/16 (49.0)

Double EZ Cushion Suspension

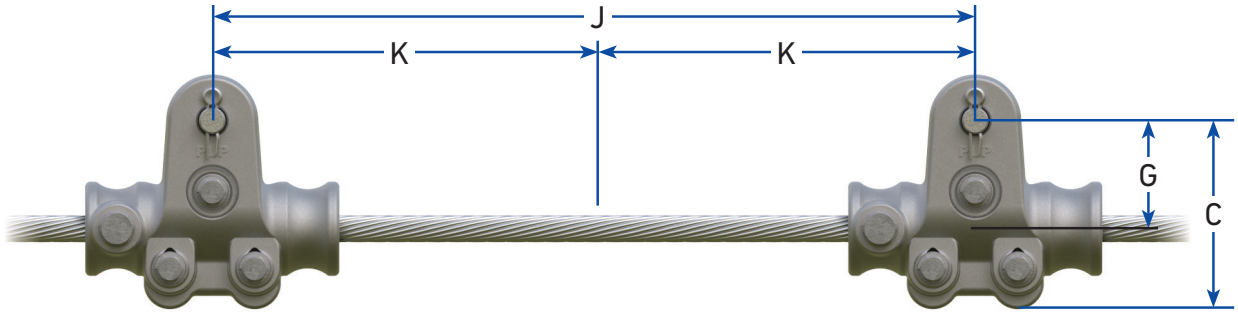

FIBERLIGN Double EZ Cushion Suspension

Dimensions in (mm)			
C	G	J	K
4-7/16 (112.7)	2-1/2 (63.5)	18 (457.2)	9 (228.6)

DIMENSIONS

Hardware Fittings

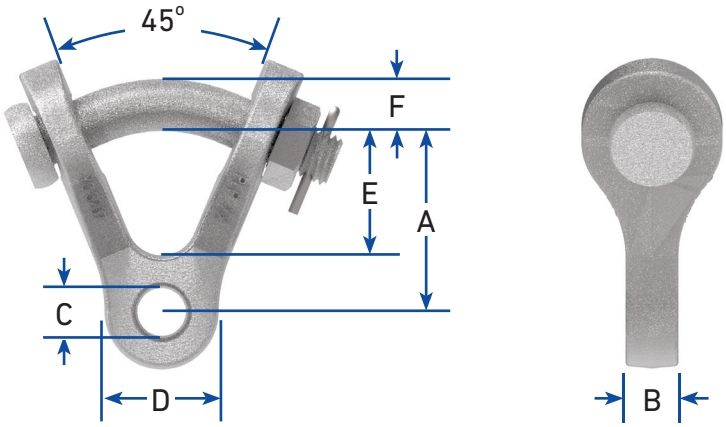

Y-Clevis Eye

Catalog Number	Dimensions in (mm)						Maximum Vertical Load
	A	B	C	D	E	F	lb
YC-5207	2-7/16 (61.9)	3/4 (19.1)	11/16 (17.5)	1-5/8 (41.3)	1-5/8 (41.3)	3/4 (19.1)	20,000

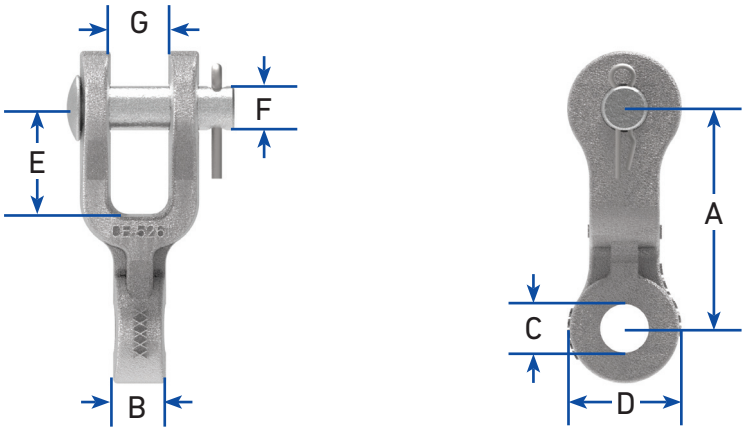

Clevis Eye

Catalog Number	Dimensions in (mm)							Maximum Vertical Load
	A	B	C	D	E	F	G	lb
CE-5261	3-1/8 (79.4)	3/4 (19.1)	11/16 (17.5)	1-1/2 (38.1)	1-1/2 (38.1)	5/8 (15.9)	13/16 (20.6)	20,000

DIMENSIONS

Hardware Fittings

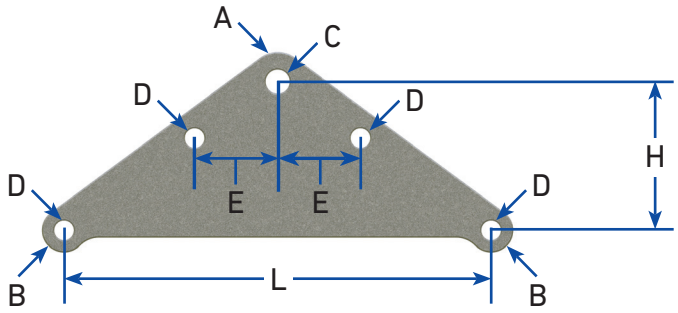

Yoke Plate

Catalog Number	Dimensions in (mm)							Plate Thickness	Maximum Vertical Load
	A (Radius)	B (Radius)	C (Dia.)	D (Dia.)	E	L	H	in (mm)	lb
YP-5908	1-1/4 (31.8)	15/16 (23.8)	1 (25.4)	13/16 (20.6)	3-1/2 (88.9)	18 (457.2)	6-1/4 (158.8)	5/8 (15.9)	40,000

ACCESSORIES

Catalog Number	Suffix Code	Description
710010016	G	4 ft (1.2 m) Long #4 (7W) Copper Ground Wire Assembly with One Terminal for 1/2" Bolt
710010294	GA	4 ft (1.2 m) Long 4/0 (7W) Aluminum Ground Wire Assembly with One Terminal for 1/2" Bolt
710011205	GA2	5 ft (1.5 m) Long 95mm² (19W) Aluminum Ground Wire Assembly with One Terminal for M12 Bolt and One Terminal for M16 Bolt – Includes bolts, washers, lock washers, and hex nuts for each terminal
AS-5L	S2	30,000 lb Anchor Shackle
YC-5207	YC	20,000 lb Y-Clevis Eye
CE-5261	CE	20,000 lb Clevis Eye
CE-5261BNK	–	20,000 lb Clevis Eye with bolt, nut, and cotter pin in place of clevis pin
CE-5261 (Qty 2)	CEYP	(2) 20,000 lb Clevis Eyes and (1) 40,000 lb 18 in Yoke Plate - For Double Cushion Suspensions only
YP-5908 (Qty 1)		

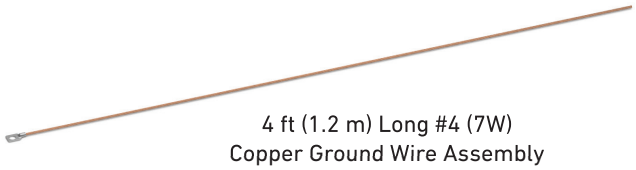

4 ft (1.2 m) Long #4 (7W)
Copper Ground Wire Assembly
(Catalog Number: 710010016, Suffix Code: G)

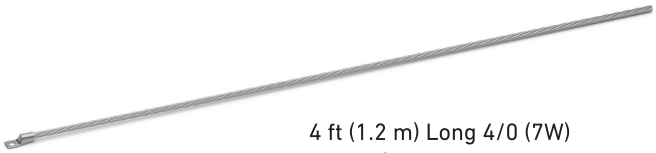

4 ft (1.2 m) Long 4/0 (7W)
Aluminum Ground Wire Assembly
(Catalog Number: 710010294, Suffix Code: GA)

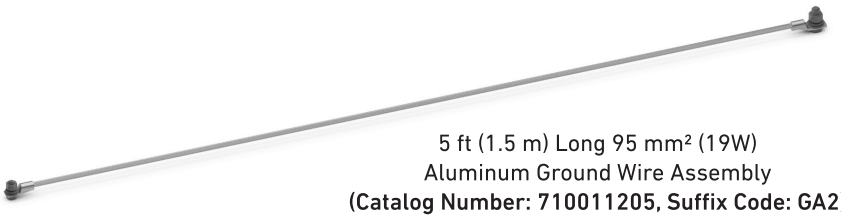

5 ft (1.5 m) Long 95 mm² (19W)
Aluminum Ground Wire Assembly
(Catalog Number: 710011205, Suffix Code: GA2)

ORDERING INFORMATION

- Select the appropriate catalog number for the Cushion Suspension from the table below based on the diameter of the OPGW.
- Add the appropriate suffix code(s) to the Cushion Suspension catalog number to include a ground wire assembly and/or attachment fittings **(ex: Catalog Number: 4700300GYC, 4700300GACE, or 4700300GA2S2CEYP)** – see ACCESSORIES on the previous page for suffix codes.
- When adding suffix codes to the Cushion Clamp catalog number, make sure that the suffix code for the ground wire assembly comes **before** the suffix code(s) for the attachment fittings.
- For Double Cushion Suspension applications, order two identical Cushion Suspensions.

FIBERLIGN EZ Cushion Suspension

Catalog Number	Cable Diameter Range	
	in	mm
4700300	0.335 – 0.347	8.5 – 8.7
4700301	0.348 – 0.360	8.8 – 9.1
4700302	0.361 – 0.373	9.2 – 9.4
4700303	0.374 – 0.386	9.5 – 9.7
4700304	0.387 – 0.398	9.8 – 10.0
4700305	0.399 – 0.412	10.1 – 10.4
4700306	0.413 – 0.425	10.5 – 10.7
4700307	0.426 – 0.438	10.8 – 11.1
4700308	0.439 – 0.464	11.2 – 11.7
4700309	0.465 – 0.490	11.8 – 12.4
4700310	0.491 – 0.516	12.5 – 13.0
4700311	0.517 – 0.542	13.1 – 13.7
4700312	0.543 – 0.568	13.8 – 14.4
4700313	0.569 – 0.594	14.5 – 15.0
4700314	0.595 – 0.620	15.1 – 15.7
4700315	0.621 – 0.645	15.8 – 16.3
4700316	0.646 – 0.672	16.4 – 17.0
4700317	0.673 – 0.698	17.1 – 17.7
4700318	0.699 – 0.724	17.8 – 18.3
4700319	0.725 – 0.750	18.4 – 19.1

Single EZ Cushion Suspension Attached to Wood Pole

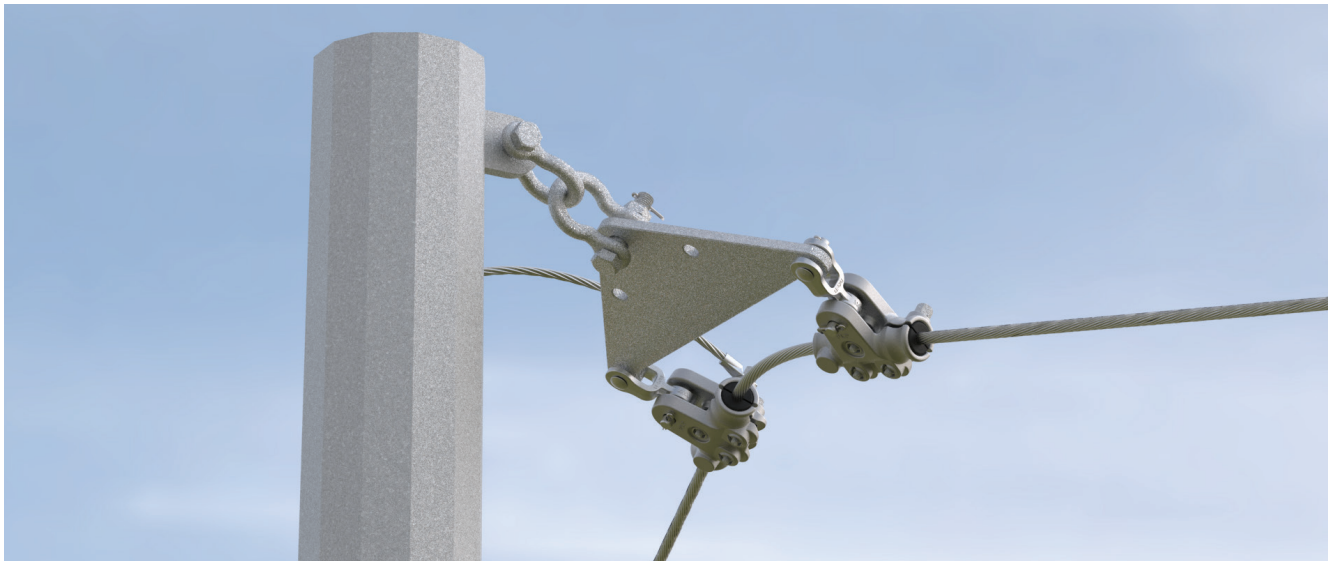

Double EZ Cushion Suspension Attached to Steel Pole

FIBERLIGN® TRUNNION SUPPORT

The **FIBERLIGN Trunnion Support** uses a combination of structural reinforcing rods (SRR), outer rods, a bolted housing, and resilient inserts to reduce compression, clamping, and bending stresses on OPGW and the optical fibers within it.

FEATURES AND BENEFITS

- Reduces negative effects of wind-induced cable motion, such as aeolian vibration, galloping, and sway
- Housing is designed to fit commonly used trunnion brackets
- Inserts are made from an elastomer that is specifically formulated to resist deterioration from UV, weathering, extreme temperature variations, and compression set
- An aluminum alloy reinforcement is molded into each insert half for extreme loading
- Current transfer tab is included to provide a direct electrical bond between the OPGW and ground lead
- Current transfer tab is captured between the OPGW and the SRR. No additional fasteners are needed.
- Housing keeper, SRR, and outer rods are made from a high-strength aluminum alloy. The housing base is made from galvanized ductile iron for added strength.
- An optional ground wire assembly can be included with the trunnion support
- SRR and outer rods cannot be reused. Hardware components can be reused, provided they are in good condition
- The FIBERLIGN Trunnion Support has been thoroughly tested for vibration, mechanical loading, and optical attenuation in accordance with IEEE Standard 1138 and IEEE Standard 1591.1

HOLDING STRENGTHS AND LINE ANGLES

Characteristic	Specification
Unbalanced/Slip Load	10%–20% of standard OPGW rated strength
Maximum Pull-off Load from Trunnion Pins	5,000 lb (any direction)
Maximum Line Angle	30 degrees

ATTACHMENT FITTINGS

- The Trunnion Support can be attached to a pole or structure with a trunnion cap or bracket with dimensions consistent with those specified in ANSI C29.7-1986, Class 57

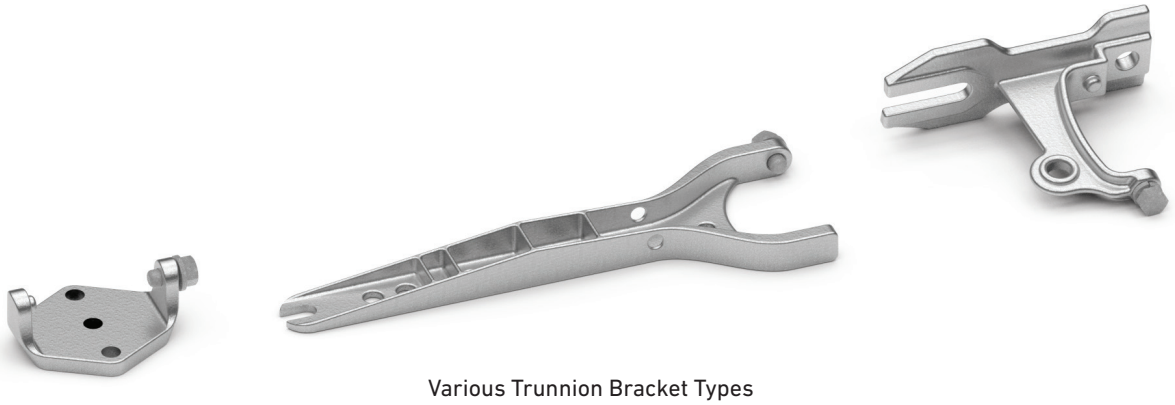

Various Trunnion Bracket Types

COMPONENTS

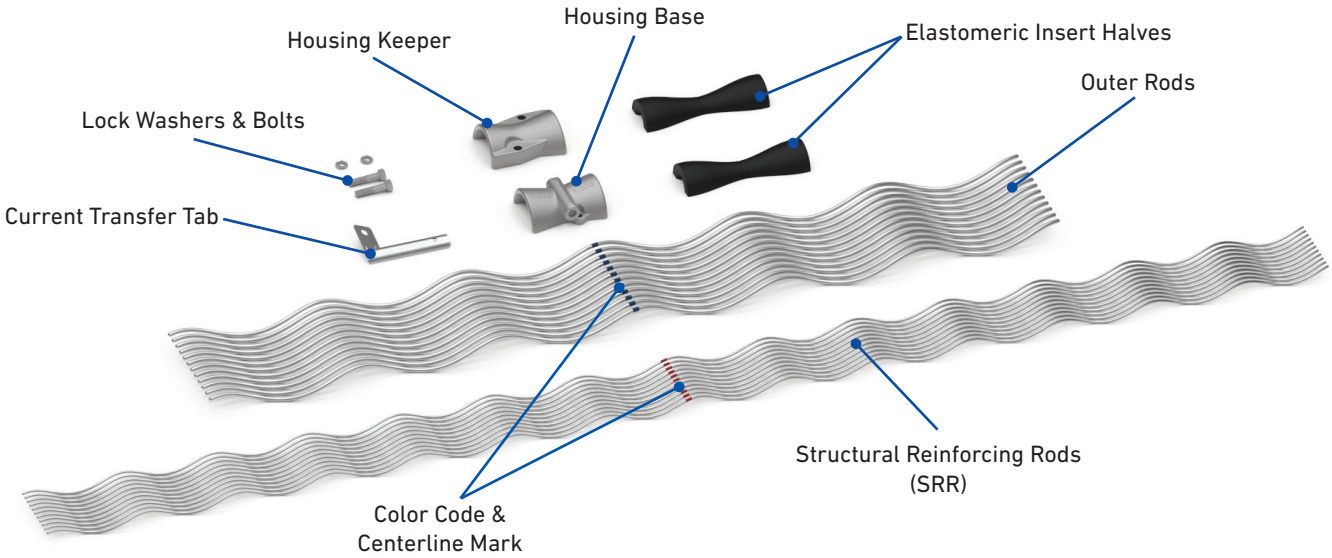

DIMENSIONS

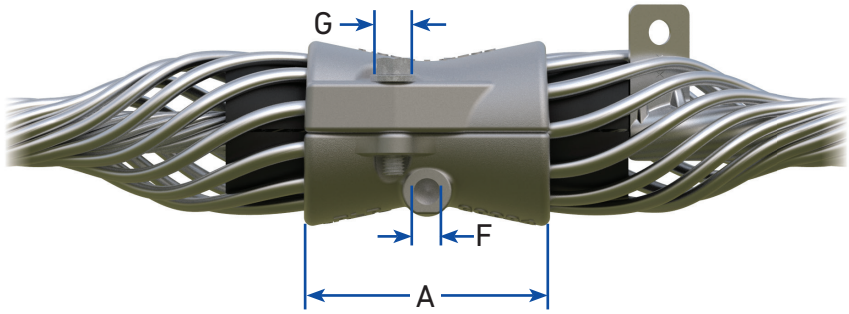

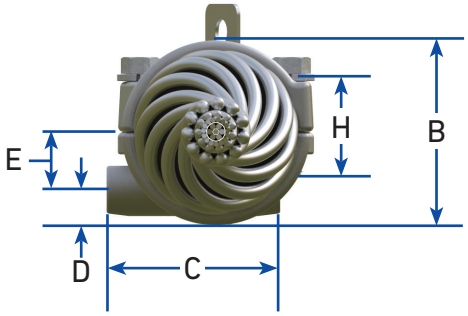

Current Transfer Tab

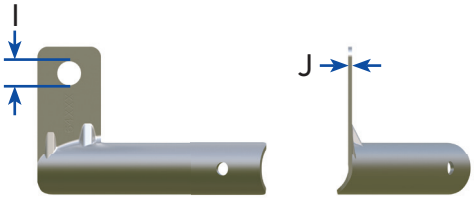

FIBERLIGN Trunnion Support

OPGW Diameter Range	Dimensions in (mm)									
in (mm)	A	B	C	D	E	F	G	H (Bolt Length)	I	J
0.312 – 0.458 (9.0 – 11.6)	3-3/4 (95.3)	2-24/32 (70.3)	3-7/8 (98.4)	26/32 (21.0)	9/16 (14.2)	19/32 (15.1)	3/4 (19.1)	2 (50.8)	16/32 (13.1)	3/32 (2.3)
0.459 – 0.565 (11.7 – 14.3)	4-1/2 (114.3)	3-7/32 (82.0)	3-7/8 (98.4)	7/8 (22.2)	3/4 (19.1)	19/32 (15.1)	3/4 (19.1)	2-1/4 (57.2)	9/16 (14.3)	3/32 (2.3)
0.566 – 0.625 (14.4 – 15.8)	5 (127.0)	3-19/32 (91.7)	3-7/8 (98.4)	23/32 (18.4)	1-1/8 (28.6)	19/32 (15.1)	3/4 (19.1)	2-1/4 (57.2)	9/16 (14.3)	3/32 (2.3)
0.626 – 0.750 (15.9 – 19.9)	5-1/2 (139.7)	4-1/8 (104.6)	3-7/8 (98.4)	24/32 (19.4)	1-5/16 (33.4)	19/32 (15.1)	3/4 (19.1)	2-1/4 (57.2)	9/16 (14.3)	3/32 (2.3)
0.751 – 0.786 (20.0 – 24.8)	5-1/2 (139.7)	4-1/8 (104.6)	3-7/8 (98.4)	24/32 (19.4)	1-5/16 (33.4)	19/32 (15.1)	3/4 (19.1)	2-1/4 (57.2)	5/8 (15.9)	3/16 (4.8)
0.787 – 0.855 (24.9 – 25.8)	6 (152.4)	4-21/32 (118.2)	3-7/8 (98.4)	26/32 (21.0)	1-1/2 (38.1)	19/32 (15.1)	3/4 (19.1)	2-1/4 (57.2)	5/8 (15.9)	3/16 (4.8)
0.856 – 0.942 (25.9 – 26.8)	6-1/2 (165.1)	5-1/16 (128.7)	3-7/8 (98.4)	29/632 (23.5)	1-5/8 (41.3)	19/32 (15.1)	3/4 (19.1)	2-1/4 (57.2)	5/8 (15.9)	3/16 (4.8)

ACCESSORIES

• All ground wire assemblies include attachment hardware (bolts, lock washers, nuts) for each terminal

Catalog Number	Suffix Code	Description
710010015	G	4 ft (1.2 m) Long #4 (7W) Copper Ground Wire Assembly with One Terminal for 1/2" Bolt
710010293	GA	4 ft (1.2 m) Long 4/0 (7W) Aluminum Ground Wire Assembly with One Terminal for 1/2" Bolt
710011205	GA2	5 ft (1.5 m) Long 95 mm² (19W) Aluminum Ground Wire Assembly with One Terminal for M12 Bolt and One Terminal for M16 Bolt

ORDERING INFORMATION

- Select the appropriate catalog number for the Trunnion Support based on the diameter of the OPGW.
- Add the appropriate suffix code to the Trunnion Support catalog number to include a ground wire assembly **(ex: Catalog Number: 4400100G, 4400100GA, or 4400100GA2)** - see ACCESSORIES on the previous page for suffix codes.
- Standard Trunnion Supports are offered for left-hand lay OPGW. Contact PLP with OPGW specifications for further information.

FIBERLIGN Trunnion Support

Catalog Number	Cable Diameter Range		SRR Specifications						Outer Rod Specifications					
	in	mm	Rod Length		Rod Diameter		Rods per Set	Color Code	Rod Length		Rod Diameter		Rods per Set	Color Code
			in	m	in	mm			in	m	in	mm		
4400099	0.312 – 0.339	7.9 – 8.6	66	1.68	0.167	4.2	7	Orange	42	1.07	0.204	5.2	11	Blue
4400100	0.354 – 0.381	9.0 – 9.6	66	1.68	0.146	3.7	9	Blue	42	1.07	0.204	5.2	11	Blue
4400101	0.382 – 0.398	9.7 – 10.0	66	1.68	0.146	3.7	9	Green	42	1.07	0.204	5.2	11	Green
4400102	0.399 – 0.418	10.1 – 10.5	66	1.68	0.146	3.7	10	Yellow	42	1.07	0.204	5.2	11	Yellow
4400103	0.419 – 0.439	10.6 – 11.1	67	1.70	0.146	3.7	10	Black	42	1.07	0.204	5.2	11	Black
4400104	0.440 – 0.458	11.2 – 11.6	68	1.73	0.146	3.7	11	White	43	1.09	0.204	5.2	11	White
4400105	0.459 – 0.461	11.6 – 11.7	72	1.83	0.167	4.2	10	Purple	46	1.17	0.250	6.4	10	Orange
4400106	0.462 – 0.476	11.7 – 12.0	72	1.83	0.167	4.2	10	Purple	46	1.17	0.250	6.4	10	Purple
4400107	0.477 – 0.503	12.1 – 12.7	72	1.83	0.146	3.7	11	Orange	46	1.17	0.250	6.4	10	Orange
4400108	0.504 – 0.511	12.8 – 12.9	73	1.85	0.146	3.7	12	Red	46	1.17	0.250	6.4	10	Purple
4400109	0.512 – 0.536	13.0 – 13.5	76	1.93	0.167	4.2	11	Blue	49	1.24	0.250	6.4	11	Blue
4400110	0.537 – 0.559	13.6 – 14.1	77	1.96	0.167	4.2	11	Green	49	1.24	0.250	6.4	11	Green
4400111	0.560 – 0.565	14.2 – 14.3	77	1.96	0.167	4.2	11	Green	49	1.24	0.250	6.4	11	Green
4400112	0.566 – 0.573	14.4 – 14.6	79	2.01	0.182	4.6	11	Black	54	1.37	0.250	6.4	12	Black
4400113	0.577 – 0.598	14.7 – 15.1	79	2.01	0.182	4.6	11	Black	54	1.37	0.250	6.4	12	White
4400114	0.599 – 0.625	15.2 – 15.8	81	2.06	0.182	4.6	11	Brown	54	1.37	0.250	6.4	12	Brown
4400116	0.626 – 0.632	15.9 – 16.0	94	2.39	0.204	5.2	11	Red	63	1.60	0.310	7.9	11	Red
4400117	0.633 – 0.666	16.1 – 16.8	94	2.39	0.204	5.2	11	Red	63	1.60	0.310	7.9	11	Blue
4400118	0.667 – 0.682	16.9 – 17.2	94	2.39	0.204	5.2	11	Yellow	63	1.60	0.310	7.9	11	Green
4400119	0.683 – 0.710	17.3 – 18.0	94	2.39	0.204	5.2	11	Yellow	63	1.60	0.310	7.9	11	Yellow
4400120	0.711 – 0.728	18.1 – 18.4	94	2.39	0.204	5.2	12	White	63	1.60	0.310	7.9	12	Black
4400121	0.729 – 0.750	18.5 – 19.0	94	2.39	0.204	5.2	12	White	63	1.60	0.310	7.9	12	White
4400122	0.751 – 0.786	19.1 – 19.9	94	2.39	0.204	5.2	12	Brown	63	1.60	0.310	7.9	12	Brown
4400123	0.787 – 0.814	20.0 – 20.6	100	2.54	0.250	6.4	11	Green	72	1.83	0.365	9.3	11	Green
4400124	0.815 – 0.845	20.7 – 21.4	100	2.54	0.250	6.4	11	Yellow	72	1.83	0.365	9.3	11	Yellow
4400125	0.846 – 0.855	21.5 – 21.6	100	2.54	0.250	6.4	11	Blue	72	1.83	0.365	9.3	12	Blue
4400126	0.856 – 0.894	21.7 – 22.6	100	2.54	0.250	6.4	12	Black	80	2.03	0.365	9.3	12	Black
4400127	0.895 – 0.907	22.7 – 23.0	100	2.54	0.250	6.4	12	White	80	2.03	0.365	9.3	12	White
4400128	0.908 – 0.916	23.1 – 23.2	100	2.54	0.250	6.4	12	Purple	80	2.03	0.365	9.3	12	Purple
4400129	0.917 – 0.929	23.3 – 23.5	100	2.54	0.250	6.4	12	Brown	80	2.03	0.365	9.3	12	Brown
4400130	0.930 – 0.942	23.6 – 23.9	100	2.54	0.250	6.4	12	Red	80	2.03	0.365	9.3	12	Red

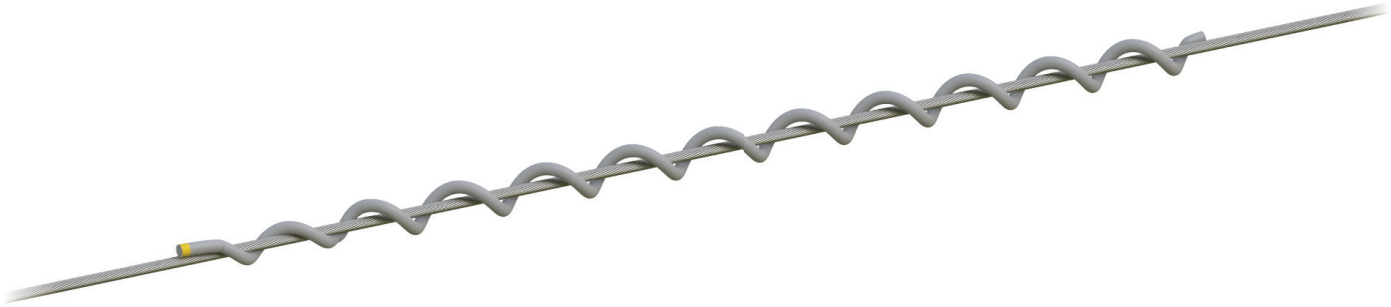

SECTION 3

MOTION CONTROL

FIBERLIGN® OPGW HARDWARE

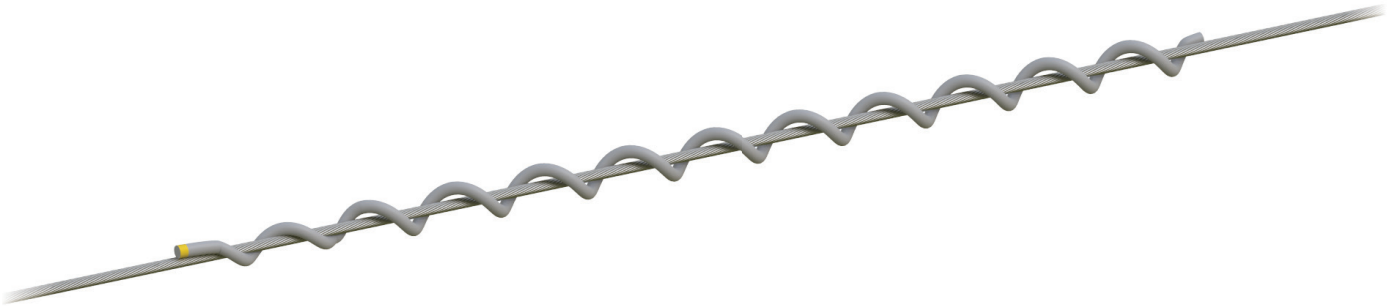

SPIRAL VIBRATION DAMPER

The **Spiral Vibration Damper** is a motion control product used to dissipate aeolian vibration that may occur on OPGW cable spans. Using the recommended number of Spiral Vibration Dampers minimizes bending strain, protecting the cable from long-term fatigue due to aeolian vibration.

FEATURES AND BENEFITS

- Helically-formed plastic rod provides an action/reaction motion that disrupts the natural vibration wave of the cable to dissipate aeolian vibration
- Gripping section of the damper gently holds the OPGW, preventing cable and internal fiber damage or distortion, which can cause optical signal loss
- Effective in a broad range of frequencies
- Easily installed by hand
- Can be nested (subsetted) allowing easier installation for optimal protection against vibration

COMPONENTS

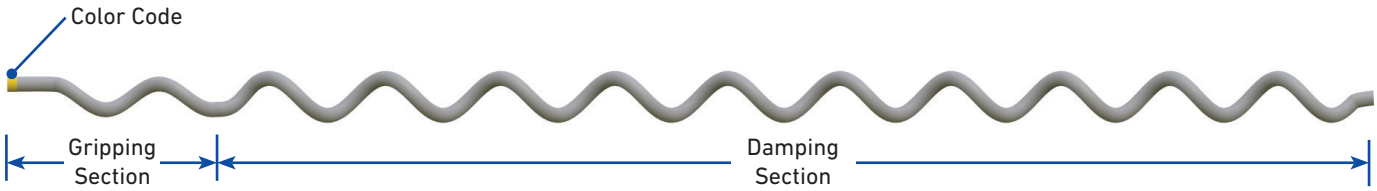

ORDERING INFORMATION

- Select the appropriate catalog number for the Spiral Vibration Damper from the table below using the OPGW diameter.
- Refer to the Basic Recommendations table below to determine how many Spiral Vibration Dampers to order per span

Spiral Vibration Damper

Catalog Number	Cable Diameter Range		Length		Per Carton	
	in	mm	in	m	Units	Wt/Lb
5050104	0.327 – 0.461	8.3 – 11.6	51	1.30	50	34
5050105	0.462 – 0.563	11.7 – 14.2	53	1.35	50	36
5050106	0.564 – 0.760	14.3 – 19.3	65	1.65	50	50

Basic Recommendations

Standard Span Length	Dampers per Cable Span
0 ft – 800 ft	2
801 ft – 1,600 ft	4
1,601 ft – 2,400 ft	6

NOTE: For water/canyon crossings, increase the basic recommendation for the number of dampers per span listed above by 50% for adequate protection against increased laminar wind flow speeds in these areas. In areas prone to high levels of vibration or in areas where the cable tension exceeds 20% RBS, consult PLP for specific recommendations.

Subsetted Spiral Vibration Dampers

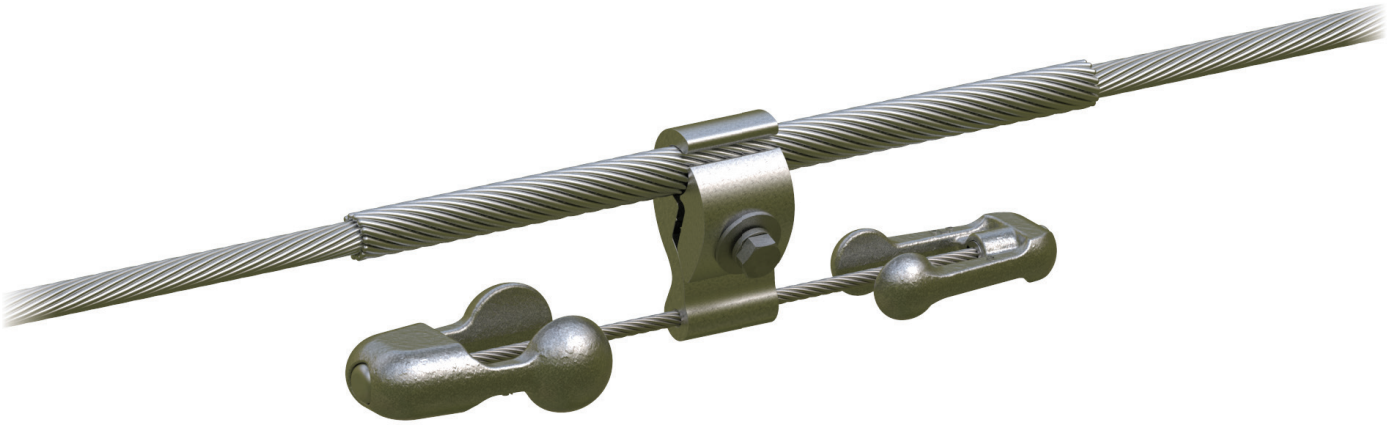

VORTX™ VIBRATION DAMPER

The **VORTX Vibration Damper** responds to wind-induced line vibration that is characterized by high frequency, low amplitude motion commonly known as aeolian vibration. The large and small weights of the VORTX damper can achieve greater power dissipation and frequency response performance than "symmetrical weight" Stockbridge damper designs. Wider frequency coverage translates into better protection as energy is more effectively dissipated over the entire range of cable frequencies.

FEATURES AND BENEFITS

- Extruded aluminum alloy contoured clamp offers a "precision" fit to evenly capture the OPGW and uniformly distribute pressure along the surface of the cable
- Meets IEC standard requirements
- Precision-manufactured galvanized steel messenger strand efficiently dissipates vibration energy
- Open, galvanized ductile iron weights do not enclose the messenger, reducing the possibility of corrosion
- Damper can be ordered with a breakaway bolt that has a bolt head designed to shear off when the bolt is tightened to the proper torque
- Number and placement of dampers in each span is determined by a proprietary, internally-developed computer program that utilizes the results of ongoing field and laboratory research
- VORTX Dampers are tested in accordance with IEC 61897: Overhead Lines – Requirements and Tests for Stockbridge Type Aeolian Vibration Dampers

DAMPER SELECTION

OPGW Diameter	Damper Type
≤0.75" (19 mm)	Spiral Vibration Damper
>0.75" (19 mm)	VORTX Vibration Damper

DAMPER QUANTITY & PLACEMENT

- The number of dampers required per span is dependent upon wind energy exposure and the OPGW's characteristics, such as self-damping which is determined by the OPGW construction and the amount of applied tension.
- Single dampers are capable of a predetermined amount of energy dissipation that can protect spans approximately 1,000 ft (300 m) long or more considering self dampening.
- Longer spans, such as river crossings, need additional protection and may require more than one damper within the span, including dampers that are placed midspan.
- Refer to the images below for the general placement sequence and measurement references for VORTX vibration dampers. **NOTE:** For dead-end hardware locations, dampers must be placed at locations "A" and "C" ("B" and "D").
- Dampers cannot be installed directly onto OPGW and must be secured to the protective rods of the attachment hardware at locations "A" and "B" or PLP Protector Rods (ordered separately) that are installed on the OPGW at locations "C" and "D."

General Placement Sequence

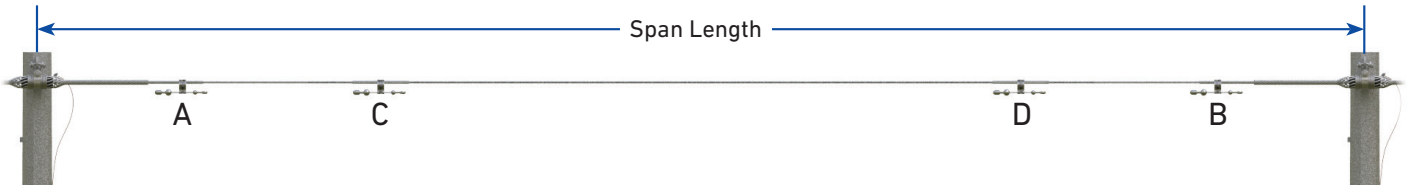

Damper Placement at Tangent Hardware Locations

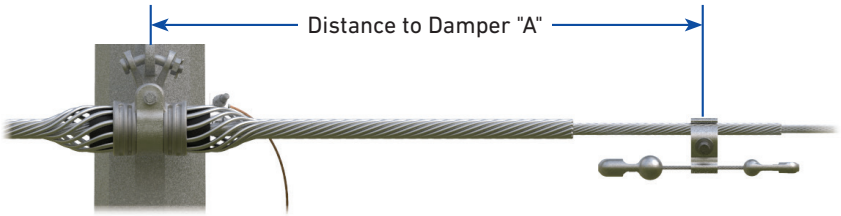

Damper Placement at Dead-End Hardware Locations

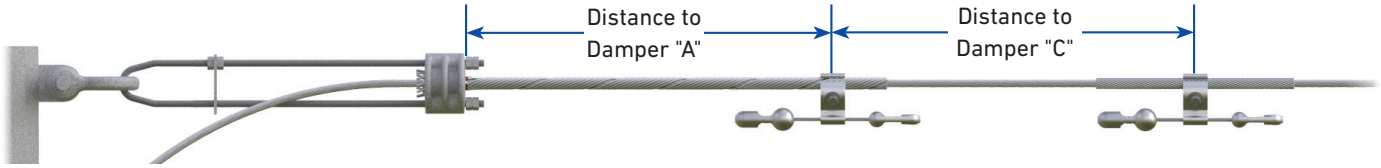

VENTUS™ MOTION CONTROL PLACEMENT SOFTWARE

- PLP's VENTUS software allows users to input real-world line conditions to generate clear, easy-to-read damper placement guidelines for PLP's industry-leading motion control solutions, including VORTX™ Vibration Dampers
- Based upon data gathered from laboratory testing, field studies, CAD research, and PLP's 70+ year knowledge base on vibration to determine the recommended damper model, quantity, and optimal placement location within the span to counter potential damage to the line system.
- Considers many input variables specific to the individual OPGW line, such as its construction, design, and local operating conditions
- Available for registration at no charge to PLP customers. Visit **ventus.plp.com** for more information.

COMPONENTS

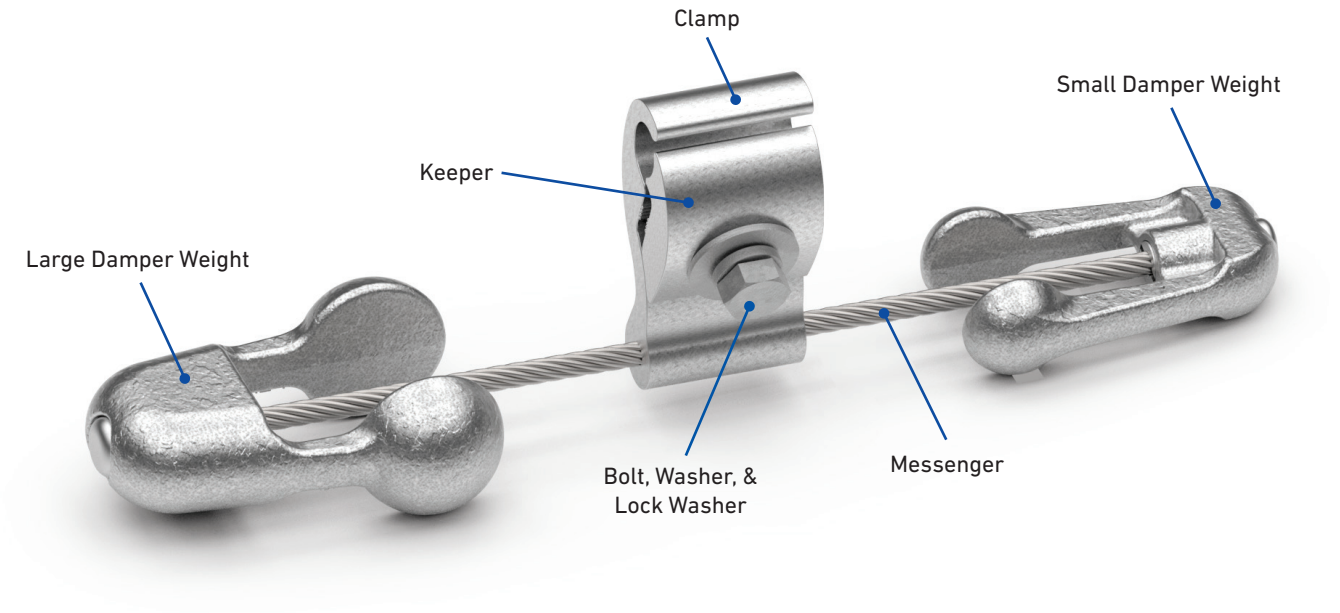

DIMENSIONS

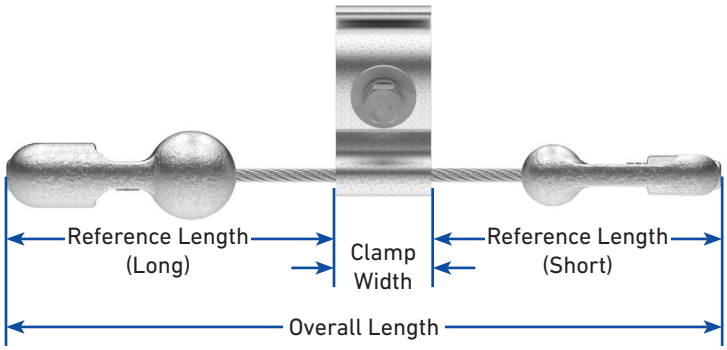

VORTX Vibration Damper Dimensions

Catalog Number	Clamp Range		Overall Length		Reference Length (Long)		Reference Length (Short)		Clamp Width		Bolt Size	Assembled Weight	
	in	mm	in	mm	in	mm	in	mm	in	mm	mm	lb	kg
VSD-2016	0.483 – 0.611	12.3 – 15.4	14.6	370	6.9	175	6.0	153	1.63	41.4	M12 x 50	3.6	1.6
VSD-2020	0.612 – 0.785	15.5 – 19.9	14.9	379	6.9	175	6.0	153	2.00	50.8	M12 x 50	3.9	1.8
VSD-2025	0.786 – 0.982	20.0 – 24.9	14.9	379	6.9	175	6.0	153	2.00	50.8	M12 x 50	4.0	1.8
VSD-2032	0.983 – 1.260	25.0 – 31.9	15.1	384	6.9	175	6.0	153	2.20	55.9	M12 x 70	4.4	2.0
VSD-2040	1.261 – 1.578	32.0 – 40.0	15.3	389	6.9	175	6.0	153	2.38	60.5	M12 x 70	4.6	2.1
VSD-2050	1.579 – 1.970	40.1 – 50.0	15.4	392	6.9	175	6.0	153	2.50	63.5	M12 x 70	4.9	2.2
VSD-2520	0.612 – 0.785	15.5 – 19.9	12.7	322	6.4	161	4.3	110	2.00	50.8	M12 x 50	4.9	2.2
VSD-2525	0.786 – 0.982	20.0 – 24.9	12.7	322	6.4	161	4.3	110	2.00	50.8	M12 x 50	5.0	2.3
VSD-2532	0.983 – 1.260	25.0 – 31.9	12.9	327	6.4	161	4.3	110	2.20	55.9	M12 x 70	5.4	2.5
VSD-2540	1.261 – 1.579	32.0 – 40.1	13.1	332	6.4	161	4.3	110	2.38	60.5	M12 x 70	5.7	2.6
VSD-3525	0.786 – 0.982	20.0 – 24.9	14.7	374	7.0	179	5.7	145	2.00	50.8	M12 x 50	7.3	3.3
VSD-3532	0.983 – 1.260	25.0 – 31.9	14.9	379	7.0	179	5.7	145	2.20	55.9	M12 x 70	7.7	3.5
VSD-3540	1.261 – 1.578	32.0 – 40.0	15.1	384	7.0	179	5.7	145	2.38	60.5	M12 x 70	7.9	3.6
VSD-3550	1.579 – 1.970	40.1 – 50.0	15.2	387	7.0	179	5.7	145	2.50	63.5	M12 x 70	8.2	3.7

ORDERING INFORMATION

Protector Rods

- Must be ordered for locations that require the damper to be placed beyond the protective rods of the attachment hardware.
- Select the appropriate catalog number from the table below using the OPGW diameter.

FIBERLIGN Protector Rods

Catalog Number	Cable Diameter		Rod Length		Rod Diameter		Rods per Set	Color Code	Units per Carton	Weight per Carton	
	in	mm	in	mm	in	mm				lb	Kg
PR-0135	0.378 – 0.423	9.6 – 10.7	12	304	0.121	3.1	11	Yellow	50	10	4.5
PR-0137	0.424 – 0.475	10.8 – 12.1	12	304	0.121	3.1	12	Brown	50	10	4.5
PR-0139	0.476 – 0.533	12.1 – 13.5	16	406	0.121	3.1	13	Blue	50	14	6.4.
PR-0141	0.534 – 0.585	13.6 – 14.8	16	406	0.121	3.1	14	Green	50	14	6.4
PR-0142	0.586 – 0.618	14.9 – 15.6	16	406	0.146	3.7	13	Orange	50	21	9.5
PR-0144	0.619 – 0.667	15.7 – 16.9	16	406	0.146	3.7	14	Purple	50	21	9.5
PR-0146	0.668 – 0.722	17.0 – 18.3	20	508	0.146	3.7	15	Red	50	29	13.1
PR-0148	0.723 – 0.816	18.4 – 20.3	20	508	0.146	3.7	16	Black	50	29	13.1
PR-0150	0.817 – 0.898	20.8 – 22.7	20	508	0.146	3.7	17	White	50	31	14.1
PR-0151	0.899 – 0.954	22.8 – 24.2	24	610	0.167	4.2	17	Yellow	50	47	21.3
PR-0152	0.955 – 1.019	24.3 – 25.8	24	610	0.182	4.6	16	Brown	25	29	13.1
PR-0154	1.020 – 1.064	25.9 – 27.0	24	610	0.182	4.6	17	Blue	25	29	16.1
PR-0155	1.065 – 1.098	27.1 – 27.8	26	660	0.204	5.2	16	Green	25	36	16.3
PR-0156	1.099 – 1.181	27.9 – 29.9	26	660	0.250	6.4	14	Orange	25	48	21.7
PR-0158	1.182 – 1.298	30.0 – 32.9	26	660	0.250	6.4	15	Purple	25	51	23.1

VORTX Vibration Dampers

- Complete the catalog number by selecting the appropriate suffix codes from the tables below
- In order to select the proper clamp suffix code, use the following equation to determine the overall diameter for the section of the span on which the damper will be installed: **OPGW Diameter + (2 x Protector Rod Diameter).**

VORTX Vibration Damper Catalog Number

VSD- X (Section 1) X (Section 2) X (Section 3)

Catalog Number Example: VSD-2025B

Includes (1) VORTX Vibration Damper with Weights for OPGW Diameter Range .465" - .720", Clamp for Overall Diameter Range .786" - .983", and Break-Away Bolt

Section 1

Weight Suffix Code	OPGW Diameter Range	
	in	mm
20	0.465 – 0.720	11.8 – 18.2
25	0.612 – 1.260	15.5 – 32.0
35	0.721 – 1.260	18.3 – 32.0

Section 2

Clamp Suffix Code	Clamp Range	
	in	mm
16	0.483 – 0.612	12.3 – 15.5
20	0.612 – 0.786	15.5 – 20.0
25	0.786 – 0.983	20.0 – 25.0
32	0.983 – 1.261	25.0 – 32.0
40	1.261 – 1.579	32.0 – 40.1
50	1.579 – 1.970	40.1 – 50.0

Section 3

Bolt Suffix Code	Bolt Type
Leave Blank	Standard Bolt
B	Break-Away Bolt

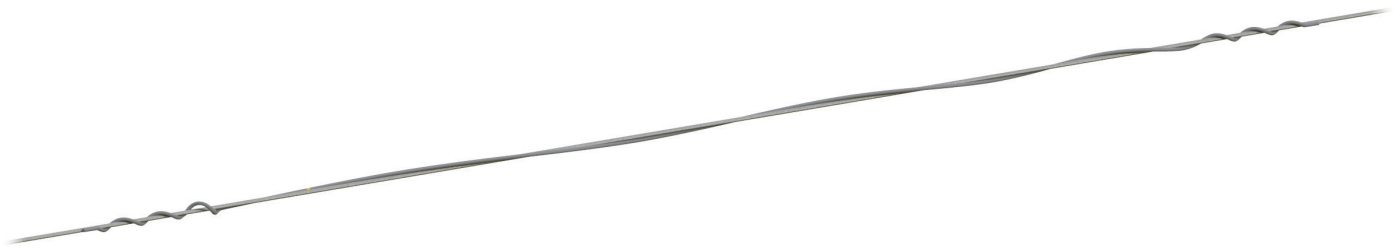

AIR FLOW SPOILER

The **Air Flow Spoiler** is a motion control product used to suppress galloping or dancing motion of OPGW spans. Galloping can rapidly cause severe damage to the cable system. Using the recommended number of Air Flow Spoilers can mitigate galloping and increase cable longevity.

FEATURES AND BENEFITS

- Central spoiling section suppresses galloping by providing a constantly changing aerodynamic profile
- Helical gripping sections on both ends hold the cable securely without excess clamping forces
- Number and placement of Air Flow Spoilers in each cable span is calculated using an internally-developed program based on ongoing field and laboratory research data.

COMPONENTS

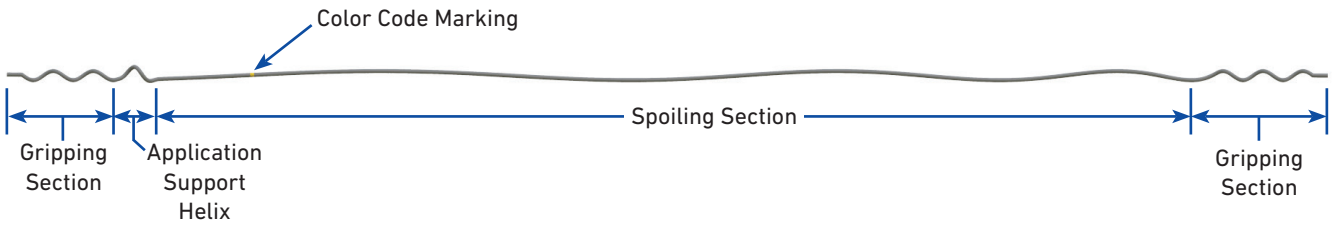

ORDERING INFORMATION

- Select the appropriate catalog number from the first table using the OPGW diameter.
- Use the second table to determine how many spoilers are required for the cable span based on the length of the span
- Consult PLP to determine the exact placement of Air Flow Spoilers for each cable span

Air Flow Spoiler

Catalog Number	Cable Diameter Range		Length		Wt/Unit (Lb)	Color Code
	in	mm	ft	m		
5058100	0.250 – 0.326	6.4 – 8.2	13.50	4.11	1.00	Red
5058101	0.327 – 0.461	8.3 – 11.6	13.50	4.11	1.00	White
5058102	0.462 – 0.563	11.7 – 14.2	14.00	4.27	2.25	Orange
5058103	0.564 – 0.760	14.3 – 19.2	14.50	4.42	2.40	Yellow
5058104	0.761 – 0.926	19.3 – 23.4	15.00	4.57	4.25	Blue
5058105	0.927 – 1.019	23.5 – 25.8	15.25	4.65	4.50	Black
5058106	1.020 – 1.165	25.9 – 29.5	15.75	4.80	5.50	Purple
5058107	1.166 – 1.469	29.6 – 37.3	16.00	4.88	5.75	Brown

Number of Air Flow Spoilers per Cable Span

Span Length		Spoilers Per Span
ft	m	
0 – 120	0 – 36.6	2
120 – 180	36.6 – 54.9	3
181 – 240	55.2 – 73.2	4
241 – 300	73.5 – 91.4	5
301 – 350	91.7 – 106.7	6
351 – 400	106.9 – 121.9	7
401 – 450	122.2 – 137.2	8
451 – 500	137.5 – 152.4	9
501 – 550	152.7 – 167.6	10

Span Length		Spoilers Per Span
ft	m	
551 – 600	167.9 – 182.9	11
601 – 650	182.9 – 198.1	12
651 – 700	198.4 – 213.4	13
701 – 750	213.7 – 228.6	14
751 – 800	228.9 – 243.8	15
801 – 850	244.1 – 259.1	16
851 – 900	259.4 – 274.3	17
901 – 950	274.6 – 289.6	18
951 – 1000	289.9 – 304.8	19

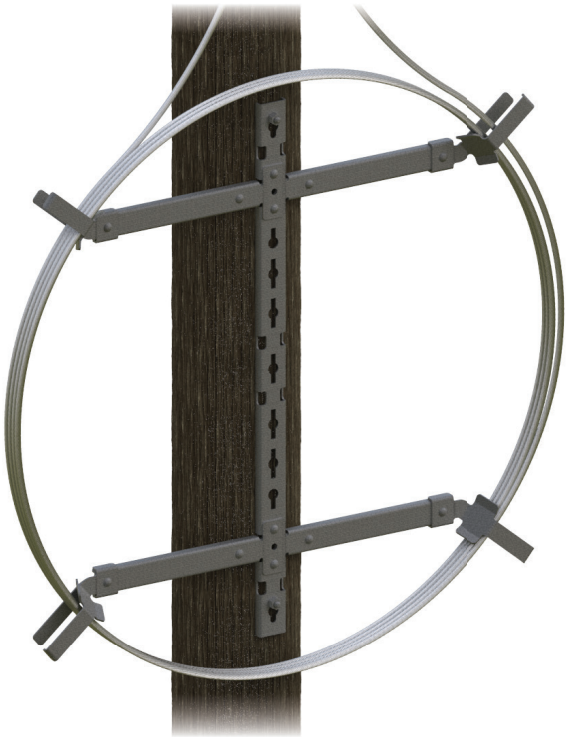

SECTION 4

CABLE STORAGE & SPLICE CLOSURES

FIBERLIGN® OPGW HARDWARE

SLACKLOOP® ADJUSTABLE CABLE STORAGE

The **SLACKLOOP Adjustable Cable Storage** neatly stores slack OPGW cable on wood poles, concrete poles, and lattice towers while maintaining the appropriate cable bend radius. The Adjustable SLACKLOOP System consists of independent crossarms and spools that can be placed any distance away from each other on the structure to adjust for the desired storage length. Cable straps (not provided) can be used to neatly group cable loops and secure the cable to spools or keepers, if desired.

FEATURES AND BENEFITS

- Various configurations can be created with standard crossarm and spool kits
- Short and long crossarm options are available
- Long crossarms allow spools to be attached at various positions at each end of the crossarm
- Mounting options available to accommodate most structures
- Accommodates cable manufacturer-suggested storage diameters
- Storage spools provide a soft, smooth surface to support and protect cable
- Steel components are galvanized or zinc plated to prevent corrosion
- Can be used with the COYOTE® Defender for ballistic protection
- Short crossarm: 2 ft loop creates 130 ft storage
- Long crossarm: 5 ft loop creates 300 ft storage

ORDERING INFORMATION

Select the appropriate **SLACKLOOP Adjustable Cable Storage** kit(s) based on the configurations shown at the bottom of the page.

SLACKLOOP Adjustable Cable Storage

Catalog Number	Product	Description	
8003503	Adjustable Cable Storage Spool	Includes (1) Cable Storage Spool	
8003503B1	Cable Storage Spool with Banding Bracket	Includes (1) Cable Storage Spool, (1) Banding Bracket, (1) 5/8"-11 x 6" Bolt, (1) 5/8"-11 Nut, (1) 5/8" Lock Washer, & (1) 5/8" Washer	
8003503LTC1	Cable Storage Spool with Lattice Tower Clamp	Includes (1) Cable Storage Spool, (1) Lattice Tower Clamp, (1) 5/8"-11 x 8" Bolt, (1) 5/8"-11 Nut, (1) 5/8" Lock Washer, & (1) 5/8" Washer	
8003493	Single Long Crossarm with Spools	Includes (2) Cable Storage Spools, (1) Long Crossarm, (2) 5/8"-11 x 6" Bolts, (2) 5/16"-18 x 1" Bolts, (2) 5/8"-11 Nuts, (2) 5/8" Lock Washers, & (2) 5/8" Washers	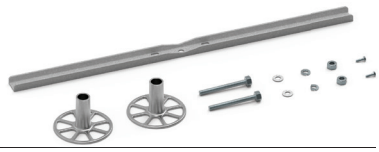
8003569	Dual Long Crossarms with Spools	Includes (4) Cable Storage Spools, (2) Long Crossarm, (4) 5/8"-11 x 6" Bolts, (4) 5/16"-18 x 1" Bolts, (4) 5/8"-11 Nuts, (4) 5/8" Lock Washers, & (4) 5/8" Washers	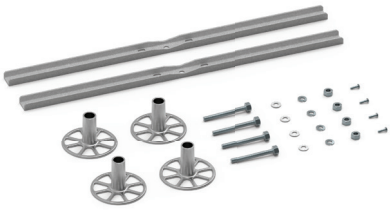

System Configurations

Single Arm and Single Spool for Bolted Applications		Dual Arm for Bolted, Banded, or COYOTE® Defender Applications		Single Arm and Single Spool for Banded Applications		Single Spools for Lattice Tower Applications	
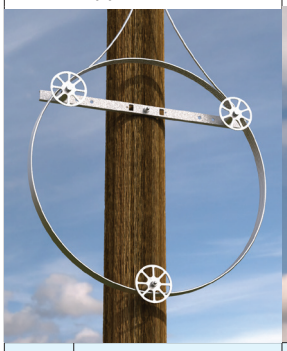		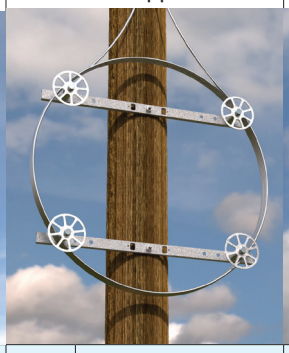					
Qty	**Catalog Number**	**Qty**	**Catalog Number**	**Qty**	**Catalog Number**	**Qty**	**Catalog Number**
1	8003493	1	8003569	1	8003493	3	8003503LTC1
1	8003503			1	8003493B1		

NOTE: 5/8" through bolts, 5/8" double-arming bolts, banding, and the COYOTE® Defender are not supplied. 5/8" through bolts and double-arming bolts are typically used to mount crossarms and spools to wood poles.

FIBERLIGN®

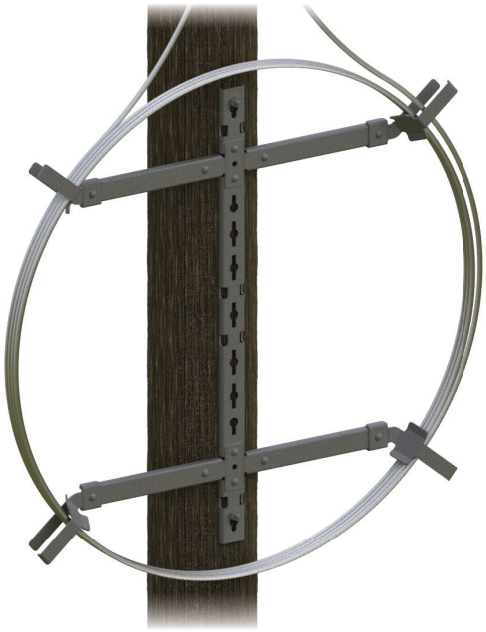

SLACKLOOP® 60" CABLE STORAGE

The **SLACKLOOP 60" Cable Storage** neatly stores slack cables on wood poles, metal poles, and lattice towers. The storage system is available in a 60" size and consists of crossarms that are attached to a central vertical bracket that can be bolted or banded to a structure. The crossarm's metal keepers maintain the proper bend radius for the slack cable. Cable straps (not provided) can be used to neatly group cable loops and secure them to keepers, if desired.

FEATURES AND BENEFITS

- Metal channel structural frames provide a durable lightweight design with rigid strength
- Frames are made from corrosion-resistant galvanized steel
- Keyholes along the central vertical bracket allow various splice closures to be mounted using specialized mounting bracket kits
- Wide cable keepers with smooth tapered ends for better cable support
- Factory-installed keepers minimize field assembly, and the product comes in a compact container for easy, efficient storage

SPECIFICATIONS

SLACKLOOP 60" Cable Storage

Characteristic	Specification
Storage Bracket Size	60" (1,524 mm)
Maximum Cable Diameter[1]	1.00" (25.4 mm)
Maximum Cable Storage Length[2]	230 ft (70.1 m) for 0.94" OD Round Cables

[1]The maximum cable diameter is based on buffer-tube-style cables. For more information regarding other cable types, contact PLP.
[2]To determine the maximum cable storage for multiple cables, divide the number of cables being stored in the bracket by the maximum cable storage amount.

ORDERING INFORMATION

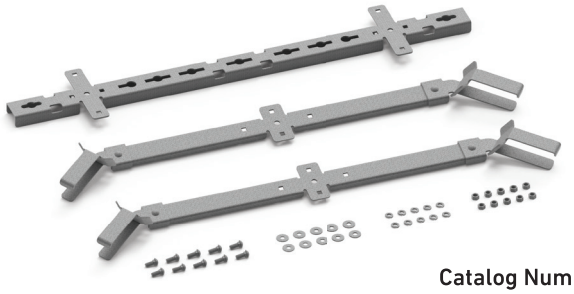

Catalog Number: 80061195

SLACKLOOP Cable Storage

Catalog Number	Description
80061195	Includes (2) Crossarms with Keepers, (1) Vertical Support Bracket, (10) 1/2"-13 x 1-1/4" Carriage Bolts, (10) 1/2"-13 Nuts, (10) 1/2" Lock Washers, & (10) 1/2" Washers

NOTE: 5/8" through bolts, 5/8" double-arming bolts, and banding not supplied. 5/8" through bolts and double-arming bolts are typically used to mount crossarms to wood poles. Two extra carriage bolts are included to mount a splice closure.

MOUNTING ACCESSORIES

- Select the appropriate catalog number based on the type of splice closure that will be mounted to the storage system.
- Order the **Stabilizing Dome Halo Bracket for COYOTE® 6.5" or 9.5" Dome Closures** when mounting them to the vertical storage system without a COYOTE® Defender

SLACKLOOP 60" Cable Storage Splice Closure Mounting Bracket Kits

Catalog Number	Description
8003472	Mounting Kit for COYOTE® 6.5" x 22", 6.5" x 28", and 8.5" x 28", & 9.5" x 28" Splice Cases
80812335	Dome Halo Bracket for COYOTE® 6.5" Dome Closures
80813941	Dome Halo Bracket for COYOTE® 9.5" Dome Closures

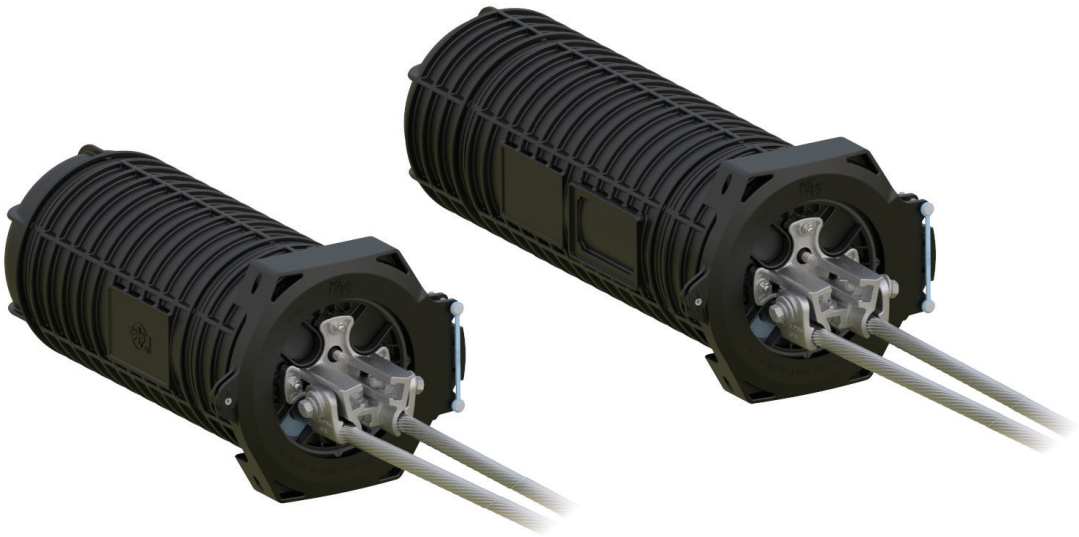

COYOTE® 6.5" DOME CLOSURES WITH FIBERLIGN® CRB SYSTEM FOR OPGW

The **FIBERLIGN Cable Restraint Bracket (CRB) System** provides a secure method for retaining OPGW cables and maintaining a stable connection when mounting COYOTE Dome Closures directly to a tower structure, vertical cable storage bracket, or within the COYOTE Defender 2. The combination of the FIBERLIGN CRB System and the COYOTE Dome closure's patented segmented end plate design and versatile grommet sealing system make this product it the ideal choice for OPGW splice applications.

FEATURES AND BENEFITS

- CRB provides superior cable retention and torque resistance, along with electrical continuity
- The CRB's adjustable keepers allow for a wide range of OPGW cable diameters to be secured in COYOTE Dome Closures, eliminating the need for costly cable connectors and an abundance of inventory
- CRB keepers are knurled for increased retention of OPGW cables
- CRB is factory installed onto specified COYOTE Dome Closures kitted with the necessary materials for preparing, routing, and splicing two OPGW cables
- 6.5" Dome CRB one-piece design can secure two OPGW cables
- 6.5" Dome CRB provides access for future OPGW or ADSS cables to enter the top two ports of the end plate without disrupting secured OPGW cables
- The CRB is designed to easily attach to the SLACKLOOP® 60" Cable Storage through the included mounting adapter bracket within each kit

SPECIFICATIONS

6.5" FIBERLIGN CRB System

Characteristic	Specification
Closure Sizes	6.5" x 17" and 6.5" x 22" COYOTE Dome Closures
Number of Restraints	2
Cable Range	0.375" – 0.750" (9.5 mm - 19.1 mm)

6.5" COYOTE Dome Closures

- Multi-hole grommets allow more than one cable to enter each cable port of the splice closures.
- Size of the splice closure is based on the outmost parts of the assembly including the sealing collar and the OPGW CRB.

Closure	6.5" x 17" Dome		6.5" x 22" Dome	
Buffer Tube Type	Plastic	Stainless Steel	Plastic	Stainless Steel
Catalog Number	COYW617P001	COYW617S001	COYW622P001	COYW622S001
Maximum Splice Tray Capacity	4 **(Catalog Number: 80806033)**		4 **(Catalog Number: 80805514)**	
Maximum Splice Capacity (Single Fusion)	48		144	
Cable Ports	4			
Cable Diameters (OPGW or ADSS)	0.30" – 0.75" (7.6 mm - 19.1 mm)			
Ground Studs	4			
Configuration	Butt			
Applications	Pole/Wall & Aerial			
Ingress Protection	IP-67			
Size	8.6" W x 20.9" L (218 mm x 529 mm)		8.6" W x 25.6" L (218 mm x 650 mm)	

CLOSURE END PLATE & CRB FEATURES

- PLP's patented segmented end plate system allows independent access to each cable port without disrupting surrounding cables.
- Sealing system created by the compression of the end plate caps against the COYOTE silicone grommets is designed to provide a secure seal around a variety of cable profiles.
- CRB secures two OPGW cables at the exterior face of the end plate while L-bracket cable restraint hardware secures cables and strength members at the interior face of the end plate.
- CRB connects all four ground studs of the end plate allowing all cables entering the closure to be bonded together through the use of the interior L-bracket cable restraint hardware.
- Captive security bolt of the CRB secures the mounting adapter bracket in place.

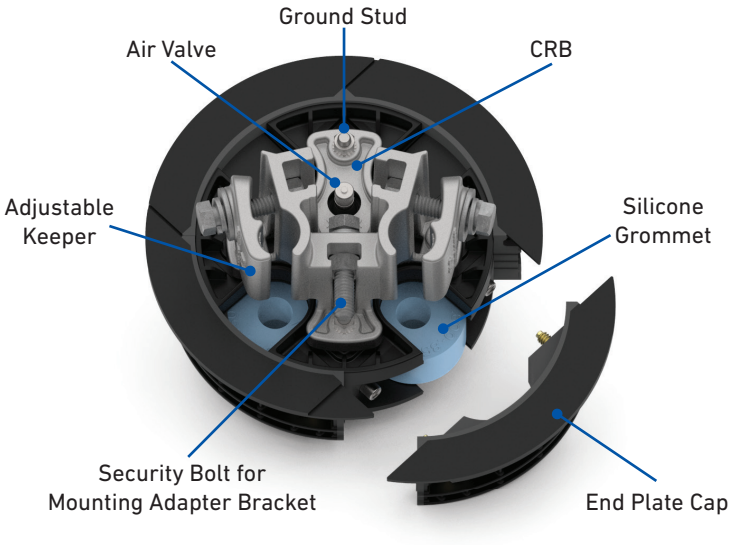

COMPONENTS

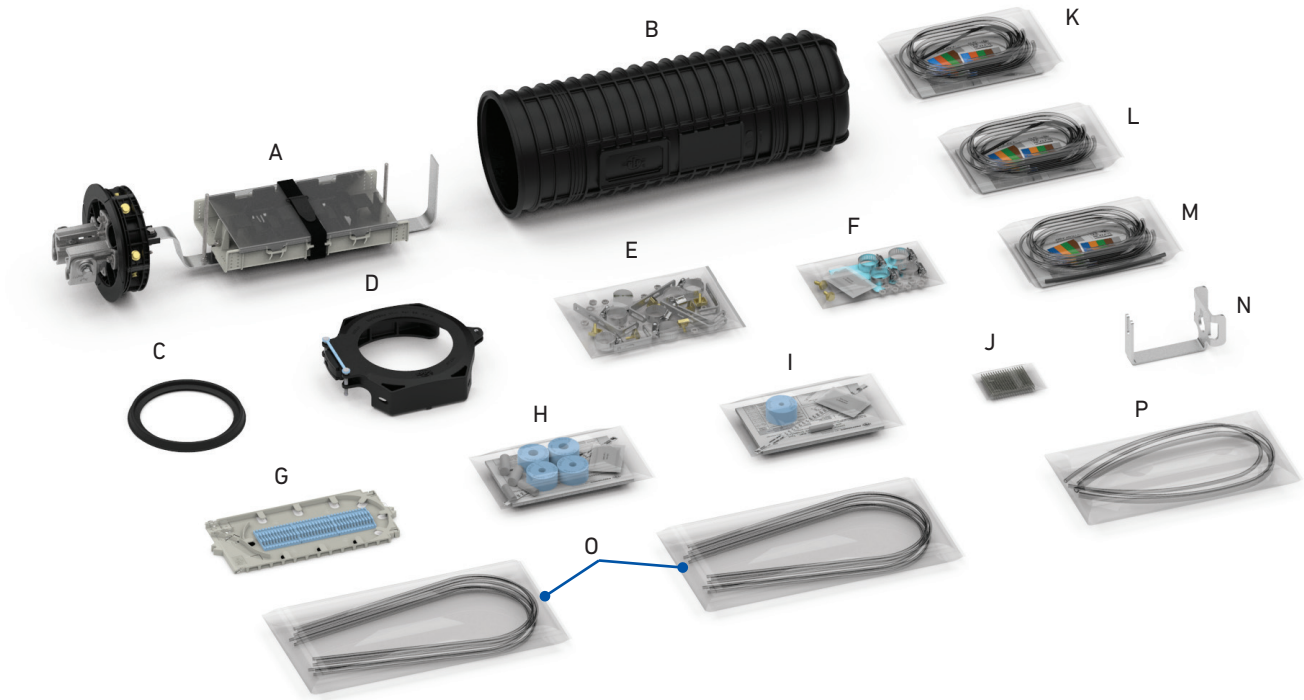

6.5" COYOTE Dome Closures with FIBERLIGN CRB System

Component	6.5" x 17" Dome Closure	6.5" x 22" Dome Closure
A	6.5" x 17" Dome Closure Plastic Buffer Tube Organizer or Stainless Steel Buffer Tube Organizer	6.5" x 22" Dome Closure Plastic Buffer Tube Organizer or Stainless Steel Buffer Tube Organizer (Shown Above)
B	6.5" x 17" Dome Cover	6.5" x 22" Dome Cover (Shown Above)
C	6.5" Dome End Plate Gasket	
D	6.5" Dome Collar	
E	OPGW Sealant and Interior Cable Restraint Bracket Kit	
F	Small Parts Bag	
G	COYOTE Legacy Short Standard Profile 12 CT. Splice Tray **(Catalog Number: 80806033)**	COYOTE Legacy Long Standard Profile 36 CT. Splice Tray **(Catalog Number: 80805514)** – Shown Above
H	Grommet Kit of (2) 1-Hole Grommets for 0.40" – 0.60" Cable Diameters (2) 1 Hole Grommets for 0.60" – 0.85" Cable Diameters	
I	1-Hole Grommet Kit for 0.30" – 0.43" Cable Diameters	
J	12 Pack of 60 mm Single-Fusion Heat Shrink Splice Protectors	36 Pack of 60 mm Single Fusion Heat Shrink Splice Protectors (Shown Above)
K	Transition Furcation Tube Kit for Stainless Steel Buffer Tube 0.102" – 0.110" (2.6 – 2.8 mm) OD Range	
L	Transition Furcation Tube Kit for Stainless Steel Buffer Tube 0.118" – 0.126" (3.0 – 3.2 mm) OD Range	
M	Transition Furcation Tube Kit for Stainless Steel Buffer Tube 0.133" – 0.154" (3.4 – 3.9 mm) OD Range	
N	Mounting Adapter Bracket for 6.5" OPGW CRB	
O	Transport Tubing Kit	
P	Transition Tubing Kit	

- Furcation kits, transition tubing kits, and transport tube kits are only included in closure kits for stainless steel buffer tube applications.

ACCESSORIES

Silicone Grommet Kits for COYOTE 6.5" Dome Closures

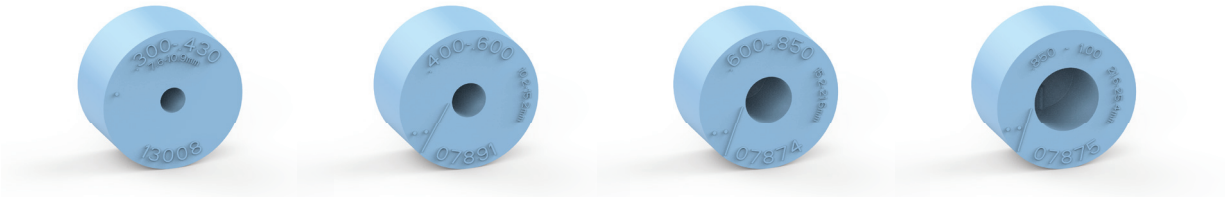

Catalog Number	8004151	8003691	8003692	8003693
in	0.30 – 0.43	0.40 – 0.60	0.60 – 0.85	0.85 – 1.00
mm	7.6 – 10.9	10.2 – 15.2	15.2 – 21.6	21.6 - 25.4

Catalog Number	8003694	8003663	8004065	8003664
in	1.00 – 1.25	0.42 – 0.60	0.250 – 0.312	0.30 – 0.43
mm	25.4 – 31.8	10.7 – 15.2	6.4 – 7.9	7.6 –10.9

Splice Tray Kits for 6.5" x 17" COYOTE Dome Closures

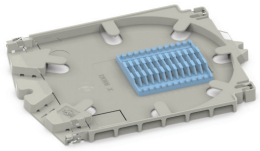

COYOTE Legacy Short Standard Profile 12 CT. Splice Tray for Single Fusion Splices (**Catalog Number: 80806033**)

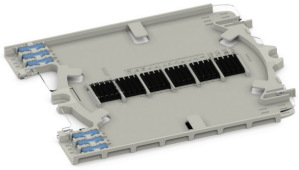

COYOTE LITE-GRIP® Short Low Profile 24 CT. Splice Tray for Single Fusion Splices (**Catalog Number: 80809958**)

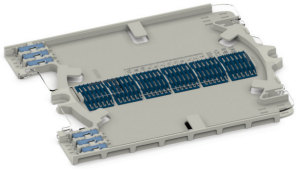

COYOTE LITE-GRIP® Short Low Profile 36 CT. Splice Tray for Single Fusion Splices (**Catalog Number: 80813152**)

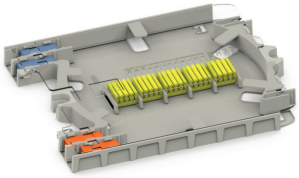

COYOTE LITE-GRIP® Short Deep Profile 40 CT. Splice Tray for Single Fusion Splices (**Catalog Number: 80808945**)

Splice Tray Kits for 6.5" x 22" COYOTE Dome Closures

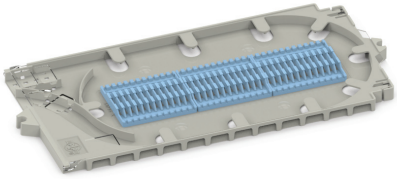

COYOTE Legacy Long Standard Profile 36 CT. Splice Tray for Single Fusion Splices (**Catalog Number: 80805514**)

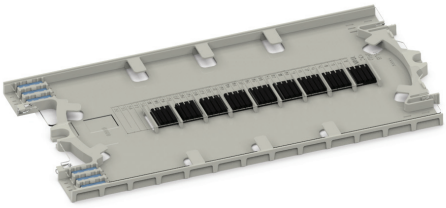

COYOTE LITE-GRIP® Long Standard Profile 36 CT. Splice Tray for Single Fusion Splices (**Catalog Number: 80810086**)

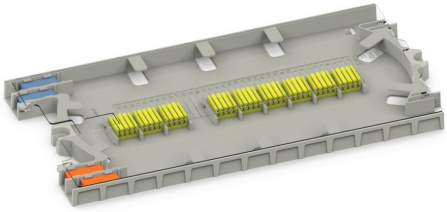

COYOTE LITE-GRIP® Long Deep Profile 72 CT. Splice Tray for Single Fusion Splices (**Catalog Number: LGSTS72**)

ACCESSORIES

Installation Materials

Catalog Number	Description
800011212	Furcation Kit – Stainless Steel Buffer Tubes 0.133" – 0.154" OD
800011381	Furcation Kit – Stainless Steel Buffer Tubes 0.118" – 0.126" OD
800011382	Furcation Kit – Stainless Steel Buffer Tubes 0.102" – 0.110" OD
800011563	Furcation Kit – Stainless Steel Buffer Tubes 0.063" – 0.098" OD
80812321	CRB System OPGW Green Sealant Kit and Attachment Kit – Includes Long and Short Strength Member Brackets
8003509	Heat Shrink Splice Protector Kit – Includes (12) 60 mm Single Fusion
80811010	Heat Shrink Splice Protector Kit – Includes (36) 60 mm Single Fusion
8003280	Transition Tube Kit – Includes (1) 0.135" x 24.5" ID (3.4 mm x 622 mm), (1) 0.170" x 24.5" ID (6 4 mm x 22 mm), (1) 0.25" x 24.5" ID (6 mm x 622 mm) Long Transition Tubes
80805293	Transport Tube Kit – Includes (6) 0.135" x 34" ID (3.4 mm x 863 mm) Long Transport Tubes

MOUNTING ACCESSORIES

- The Dome Halo Bracket is used to secure the top end of the dome closure when the closure is directly mounted to a pole/structure.
- The Lattice Tower Clamp Kit is used for mounting the 60" Fixed Crossarm Vertical SLACKLOOP® System or the Defender 2 directly to lattice towers with tower members up to 1-1/8" thick. Two lattice tower clamps are required for each installation.
- 5/8" through bolts, 5/8" double-arming bolts, and banding are not supplied with any of the kits listed below.

Catalog Number	Description
80812335	Dome Halo Bracket for 6.5" COYOTE Dome Closures with FIBERLIGN CRB System
80061195	60" Fixed Crossarm Vertical SLACKLOOP System
80061194	COYOTE Defender 2 for 6.5" COYOTE Dome Closures
LTC-1	Lattice Tower Clamp Kit with 6" Long Bolt

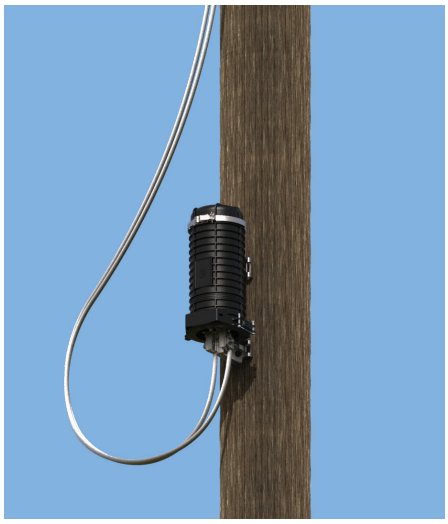

COYOTE 6.5"x17" Dome Closure with FIBERLIGN CRB System Mounted to Wood Pole with Mounting Adapter Bracket and Dome Halo Bracket

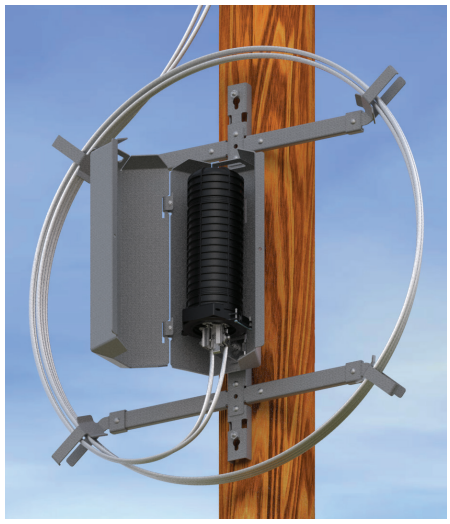

COYOTE 6.5"x22" Dome Closure with FIBERLIGN CRB System Mounted to Wood Pole with COYOTE Defender 2 and 60" Fixed Crossarm Vertical SLACKLOOP System

COYOTE 6.5"x22" Dome Closure with FIBERLIGN CRB System Mounted to Lattice Tower with 60" Fixed Crossarm Vertical SLACKLOOP System and Lattice Tower Clamps

ORDERING INFORMATION

- Select the appropriate catalog number from the tables below based on the OPGW fiber count and buffer tube type.
- 6.5" COYOTE Dome Closure Kits with the FIBERLIGN CRB System can be customized to include the appropriate grommet kit(s) and splice tray(s) required for specific cable diameters and splice quantities. Contact PLP for details.

6.5" x 17" COYOTE Dome Closure Kits with the FIBERLIGN CRB System

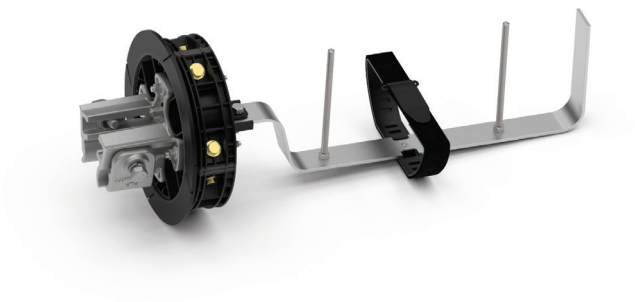

Plastic Buffer Tube Organizer
(Catalog Number: COYW617P001)

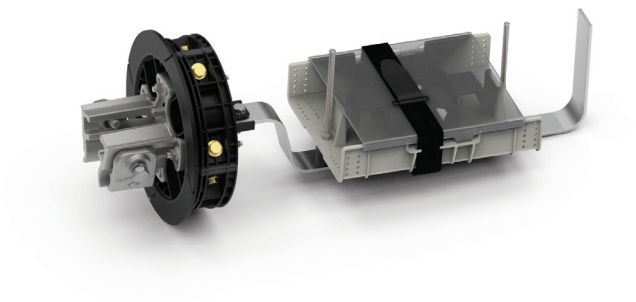

Stainless Steel Buffer Tube Organizer
(Catalog Number: COYW617S001)

Catalog Number	Description
COYW617P001	COYOTE 6.5" x 17" Dome Closure with FIBERLIGN CRB System for Plastic Buffer Tube Application
COYW617S001	COYOTE 6.5" x 17" Dome Closure with FIBERLIGN CRB System for Stainless Steel Buffer Tube Applications

6.5" x 22" COYOTE Dome Closure Kits with the FIBERLIGN CRB System

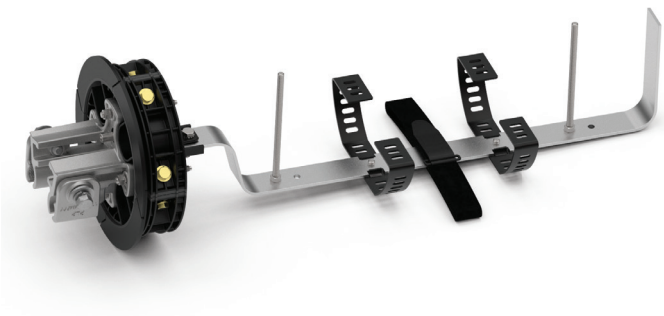

Plastic Buffer Tube Organizer
(Catalog Number: COYW622P001)

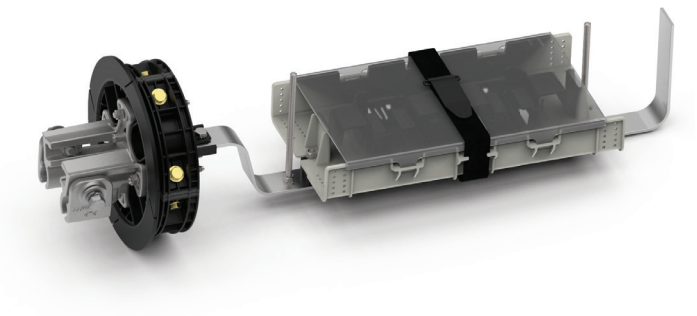

Stainless Steel Buffer Tube Organizer
(Catalog Number: COYW622S001)

Catalog Number	Description
COYW622P001	COYOTE 6.5" x 22" Dome Closure with FIBERLIGN CRB System for Plastic Buffer Tube Application
COYW622S001	COYOTE 6.5" x 22" Dome Closure with FIBERLIGN CRB System for Stainless Steel Buffer Tube Applications

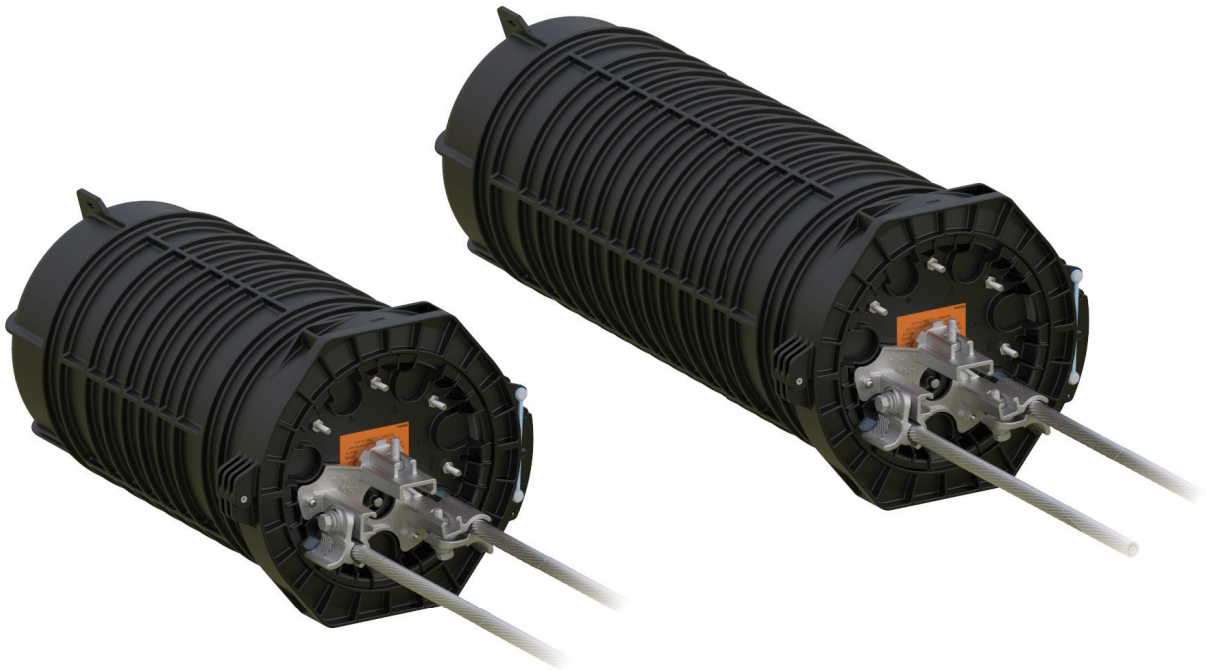

COYOTE® 9.5" DOME CLOSURES WITH FIBERLIGN® CRB SYSTEM FOR OPGW

The **FIBERLIGN Cable Restraint Bracket (CRB) System** provides a secure method for retaining OPGW cables and maintaining a stable connection when mounting COYOTE Dome Closures directly to a tower structure, vertical cable storage bracket, or within the COYOTE Defender. The combination of the FIBERLIGN OPGW CRB and the COYOTE Dome closure's patented segmented end plate design and versatile grommet sealing system make this product the ideal choice for OPGW splice applications.

FEATURES AND BENEFITS

- CRB provides superior cable retention and torque resistance, along with electrical continuity
- Flippable, adjustable keepers of the CRB allow for a wide range of OPGW cable diameters to be secured in COYOTE Dome Closures, eliminating the need for costly cable connectors and an abundance of inventory
- CRB keepers are knurled for increased retention of OPGW cables
- CRB is factory installed onto specified COYOTE Dome Closures kitted with the necessary materials for preparing, routing, and splicing two OPGW cables
- The patent-pending 9.5" Dome Closure CRB modular design can secure two OPGW cables initially and an additional four OPGW cables with optional interlocking single-port OPGW CRBs
- The CRB is designed to easily attach to the SLACKLOOP® 60" Cable Storage through the included mounting adapter bracket within each kit

SPECIFICATIONS

9.5" FIBERLIGN CRB System

Characteristic	Specification
Closure Sizes	9.5" x 19" and 9.5" x 28" COYOTE Dome Closures
Number of Restraints	2 initially; up to 6 with optional single port CRBs
Cable Range	0.360" – 1.100" (9.1 - 27.9 mm)

9.5" COYOTE Dome Closures

- Multi-hole grommets allow more than one cable to enter each cable port of the splice closures.
- Size of the splice closure is based on the outmost parts of the assembly including the sealing collar and the OPGW CRB.

Closure	9.5" x 19" Dome		9.5" x 28" Dome	
Buffer Tube Type	Plastic	Stainless Steel	Plastic	Stainless Steel
Catalog Number	COYW919P001	COYW919S001	COYW928P001	COYW928S001
Maximum Splice Tray Capacity	12 **(Catalog Number: 80809958)**		6 **(Catalog Number: LGSTS72)**	
Maximum Splice Capacity (Single Fusion)	288		432	
Cable Ports	6 (7th port of the end plate is unable to be used due to the positioning of the CRB)			
Cable Diameters (OPGW & ADSS)	0.36" – 1.10" (9.1 - 27.9 mm)			
Ground Studs	7			
Configuration	Butt			
Applications	Pole/Wall & Aerial			
Ingress Protection	IP-67			
Size	11.5" W x 20.4" L (292 x 510 mm)		11.5" W x 29.5" L (292 x 749 mm)	

CLOSURE END PLATE & CRB FEATURES

- PLP's patented segmented end plate system allows independent access to each cable port without disrupting surrounding cables.
- The sealing system created by the compression of the end plate caps against the COYOTE silicone grommets is designed to provide a secure seal around a variety of cable profiles.
- The CRB secures up to 6 OPGW cables at the exterior face of the end plate while L-bracket cable restraint hardware secures cables and strength members at the interior face of the end plate.
- The CRB connects all seven ground studs of the end plate allowing all cables entering the closure to be bonded together through the use of the interior L-bracket cable restraint hardware.
- The captive security bolt of the CRB secures the mounting adapter bracket in place.

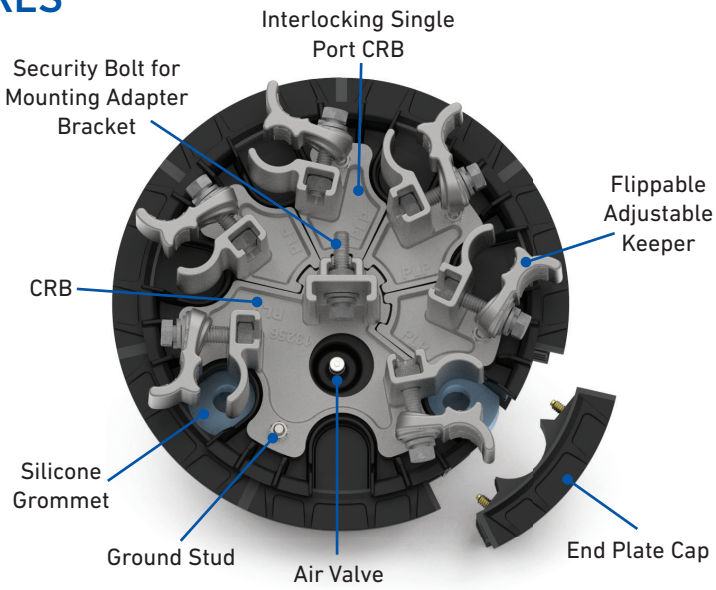

COMPONENTS

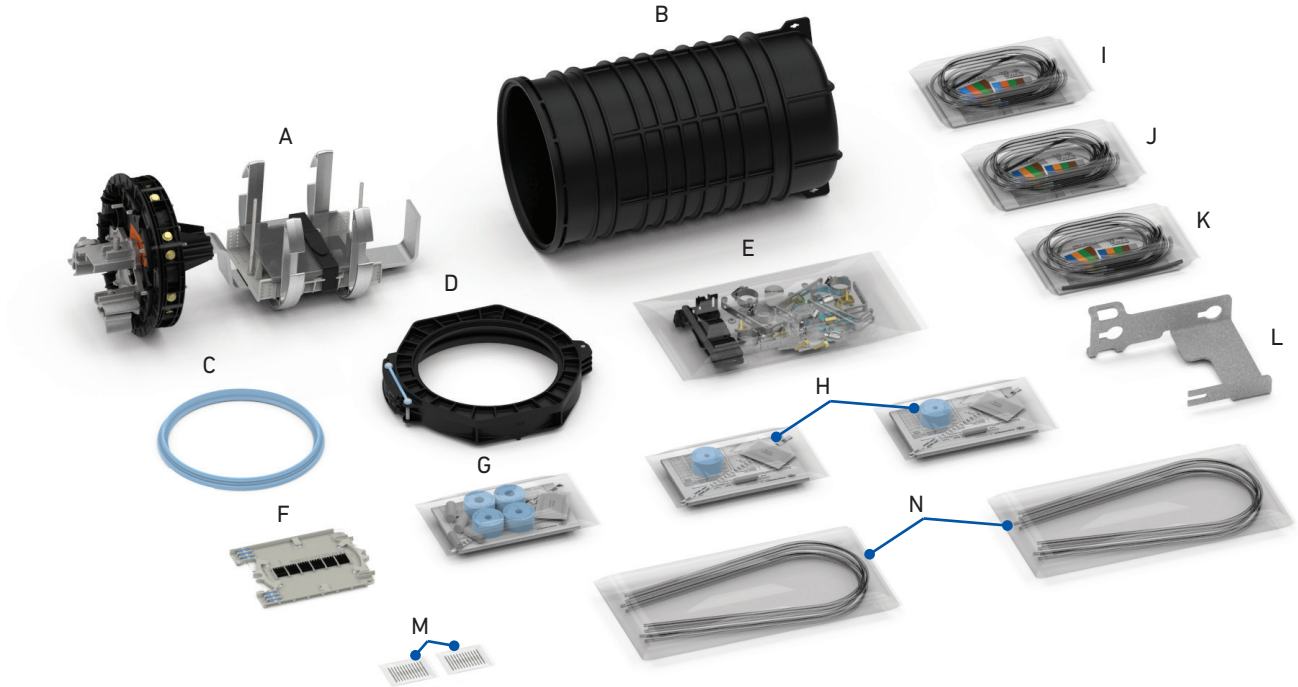

9.5" COYOTE Dome Closures with FIBERLIGN CRB System

Component	9.5" x 19" Dome Closure	9.5" x 28" Dome Closure
A	9.5" x 19" Dome Closure Plastic Buffer Tube Organizer or Stainless Steel Buffer Tube Organizer (Shown Above)	9.5" x 28" Dome Closure Plastic Buffer Tube Organizer or Stainless Steel Buffer Tube Organizer
B	9.5" x 19" Dome Cover (Shown Above)	9.5" x 28" Dome Cover
C	9.5" Dome End Plate Gasket	
D	9.5" Dome Collar	
E	Small Parts Bag for 9.5" Dome Closures with FIBERLIGN® CRB System – Includes OPGW Sealant and Interior Cable Restraint Brackets	
F	COYOTE LITE-GRIP® Short Low Profile 24 CT. Splice Tray **(Catalog Number: 80809958)** - Shown Above	COYOTE LITE-GRIP® Long Deep Profile 72 CT. Splice Tray **(Catalog Number: LGSTS72)**
G	Grommet Kit of (2) 1-Hole Grommets for 0.40" – 0.60" Cable Diameters (2) 1-Hole Grommets for 0.60" – 0.85" Cable Diameters	
H	1-Hole Grommet Kit for 0.30" – 0.43" Cable Diameters	
I	Transition Furcation Tube Kit for Stainless Steel Buffer Tube 0.102" – 0.110" (2.6 – 2.8 mm) OD Range	
J	Transition Furcation Tube Kit for Stainless Steel Buffer Tube 0.118" – 0.126" (3.0 – 3.2 mm) OD Range	
K	Transition Furcation Tube Kit for Stainless Steel Buffer Tube 0.133" – 0.154" (3.4 – 3.9 mm) OD Range	
L	Mounting Adapter Bracket for 9.5" OPGW CRB	
M	12 Packs of 40 mm Single-Fusion Heat Shrink Splice Protectors (Shown Above)	36 Packs of 40 mm Single-Fusion Heat Shrink Splice Protectors
N	Transport Tubing Kits	

• Furcation kits and transport tube kits are only included in closure kits for stainless steel buffer tube applications.

ACCESSORIES

Silicone Grommet Kits for COYOTE 9.5" Dome Closures

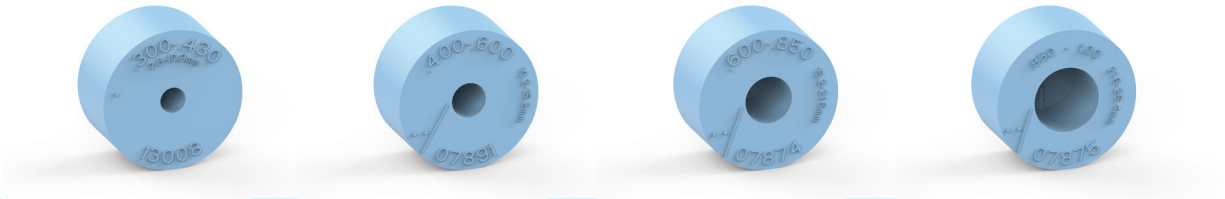

Catalog Number	8004151	8003691	8003692	8003693
in	0.30 – 0.43	0.40 – 0.60	0.60 – 0.85	0.85 – 1.00
mm	7.6 – 10.9	10.2 – 15.2	15.2 – 21.6	21.6 - 25.4

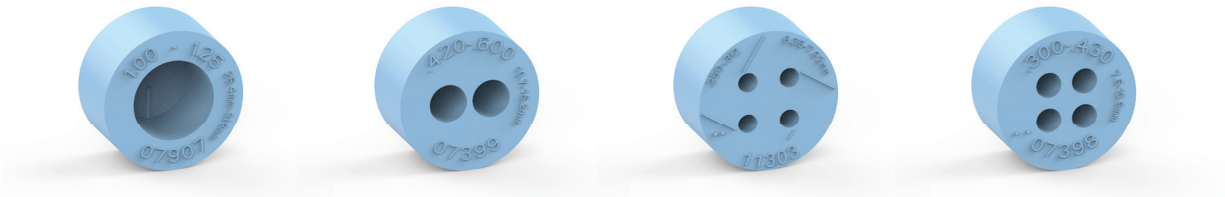

Catalog Number	8003694	8003663	8004065	8003664
in	1.00 – 1.25	0.42 – 0.60	0.250 – 0.312	0.30 – 0.43
mm	25.4 – 31.8	10.7 – 15.2	6.4 – 7.9	7.6 –10.9

Splice Tray Kits for 9.5" x 19" COYOTE Dome Closures

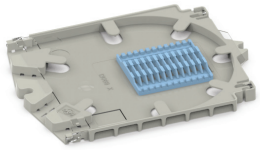

COYOTE Legacy Short Standard Profile 12 CT. Splice Tray for Single Fusion Splices (**Catalog Number: 80806033**)

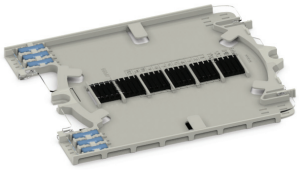

COYOTE LITE-GRIP® Short Low Profile 24 CT. Splice Tray for Single Fusion Splices (**Catalog Number: 80809958**)

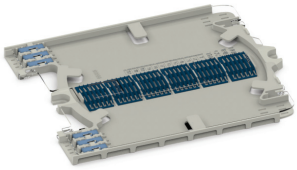

COYOTE LITE-GRIP® Short Low Profile 36 CT. Splice Tray for Single Fusion Splices (**Catalog Number: 80813152**)

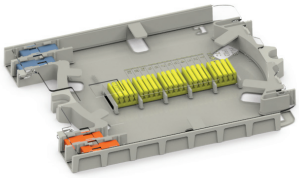

COYOTE LITE-GRIP® Short Deep Profile 40 CT. Splice Tray for Single Fusion Splices (**Catalog Number: 80808945**)

Splice Tray Kits for 9.5" x 28" COYOTE Dome Closures

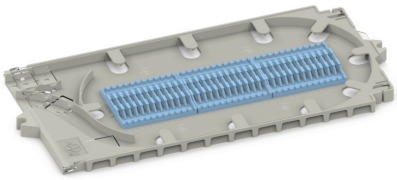

COYOTE Legacy Long Standard Profile 36 CT. Splice Tray for Single Fusion Splices (**Catalog Number: 80805514**)

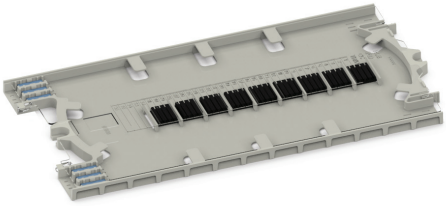

COYOTE LITE-GRIP® Long Standard Profile 36 CT. Splice Tray for Single Fusion Splices (**Catalog Number: 80810086**)

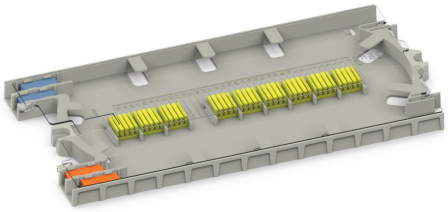

COYOTE LITE-GRIP® Long Deep Profile 72 CT. Splice Tray for Single Fusion Splices (**Catalog Number: LGSTS72**)

ACCESSORIES

Installation Materials

Catalog Number	Description
80813629	Interlocking Single Port CRB for OPGW – Includes (1) "L" Bracket for interior cable restraint
800011212	Furcation Kit – Stainless Steel Buffer Tubes 0.133" – 0.154" OD
800011381	Furcation Kit – Stainless Steel Buffer Tubes 0.118" – 0.126" OD
800011382	Furcation Kit – Stainless Steel Buffer Tubes 0.102" – 0.110" OD
800011563	Furcation Kit – Stainless Steel Buffer Tubes 0.063" – 0.098" OD
80813862	Small Parts Bag for 9.5" COYOTE® Dome Closures with FIBERLIGN® CRB System
80808187	Heat Shrink Splice Protector Kit – Includes (12) 40 mm Single Fusion
8004095	Heat Shrink Splice Protector Kit – Includes (50) 40 mm Single Fusion
8003280	Transition Tube Kit – Includes (1) 0.135" x 24.5" ID (3.4 mm x 622 mm), (1) 0.170" x 24.5" ID (6 4 mm x 22 mm), (1) 0.25" x 24.5" ID (6 mm x 622 mm) Long Transition Tubes
80805293	Transport Tube Kit – Includes (6) 0.135" x 34" ID (3.4 mm x 863 mm) Long Transport Tubes

MOUNTING ACCESSORIES

- The Dome Halo Bracket is used to secure the top end of the dome closure when the closure is directly mounted to a pole/structure or when a COYOTE 9.5" x 28" Dome Closure is mounted directly to the SLACKLOOP® 60" Cable Storage.
- The Lattice Tower Clamp Kit is used for mounting the SLACKLOOP 60" Cable Storage or the Defender directly to lattice towers with tower members up to 1-1/8" thick. Two Lattice Tower Clamps are required for each installation.
- 5/8" through bolts, 5/8" double-arming bolts, and banding are not supplied with any of the kits listed below.

Catalog Number	Description
80813941	Dome Halo Bracket for 9.5" COYOTE Dome Closures with FIBERLIGN CRB System
80061195	SLACKLOOP 60" Cable Storage
8003512	COYOTE Defender for 9.5" COYOTE Dome Closures
LTC-1	Lattice Tower Clamp Kit with 6" Long Bolt

COYOTE 9.5"x19" Dome Closure with FIBERLIGN CRB System Mounted to Wood Pole with Dome Halo Bracket and Direct Mounting Clamp

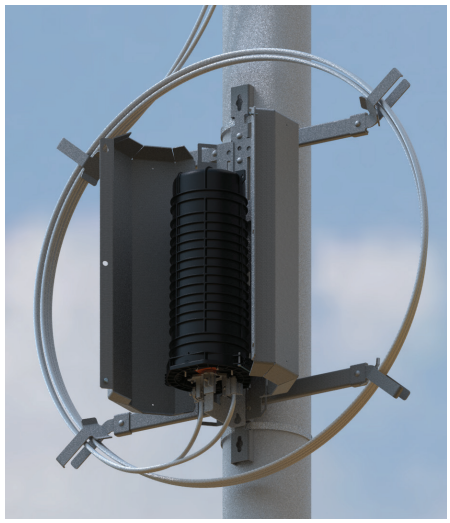

COYOTE 9.5"x28" Dome Closure with FIBERLIGN CRB System Mounted to Steel Pole with COYOTE Defender and SLACKLOOP 60" Cable Storage

COYOTE 9.5"x28" Dome Closure with FIBERLIGN CRB System Mounted to Lattice Tower with SLACKLOOP 60" Cable Storage and Lattice Tower Clamps

ORDERING INFORMATION

- Select the appropriate catalog number from the tables below based on the OPGW fiber count and buffer tube type.
- 9.5" COYOTE Dome Closure Kits with the FIBERLIGN CRB System can be customized to include the appropriate grommet kit(s) and splice tray(s) required for specific cable diameters and splice quantities. Contact PLP for details.

9.5" x 19" COYOTE Dome Closure Kits with the FIBERLIGN CRB System

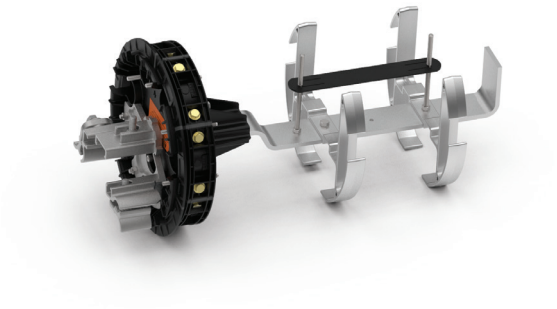

Plastic Buffer Tube Organizer
(Catalog Number: COYW919P001)

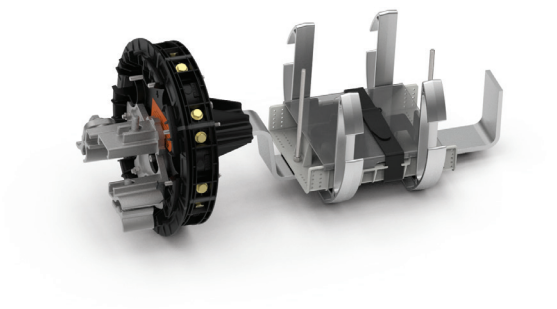

Stainless Steel Buffer Tube Organizer
(Catalog Number: COYW919S001)

Catalog Number	Description
COYW919P001	COYOTE 9.5" x 19" Dome Closure with FIBERLIGN CRB System for Plastic Buffer Tube Application
COYW919S001	COYOTE 9.5" x 19" Dome Closure with FIBERLIGN CRB System for Stainless Steel Buffer Tube Applications

9.5" x 28" COYOTE Dome Closure Kits with the FIBERLIGN CRB System

Plastic Buffer Tube Organizer
(Catalog Number: COYW928P001)

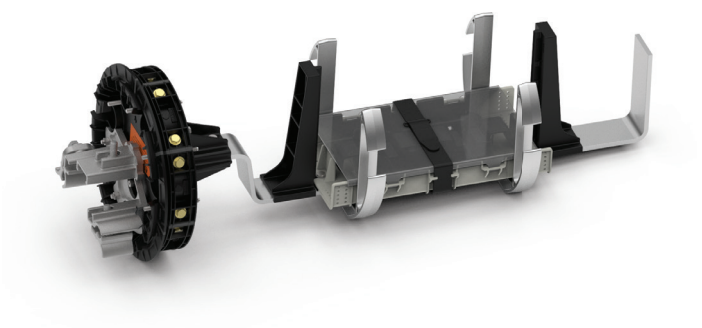

Stainless Steel Buffer Tube Organizer
(Catalog Number: COYW928S001)

Catalog Number	Description
COYW928P001	COYOTE 9.5" x 28" Dome Closure with FIBERLIGN CRB System for Plastic Buffer Tube Application
COYW928S001	COYOTE 9.5" x 28" Dome Closure with FIBERLIGN CRB System for Stainless Steel Buffer Tube Applications

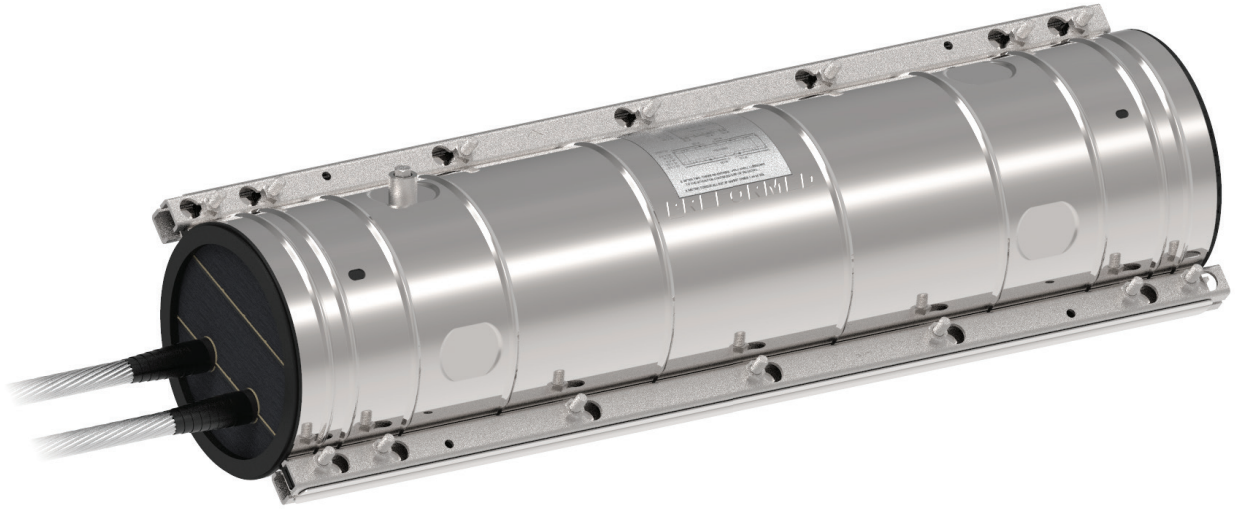

COYOTE® STAINLESS STEEL SPLICE CASE

The **COYOTE Stainless Steel Splice Case for OPGW** combines the field-proven performance of the ARMADILLO® Stainless Steel Splice Case with the high capacity and craft-friendly COYOTE Fiber Management System. Designed for OPGW types with flexible plastic buffer tubes, the COYOTE Stainless Steel Splice Case provides dependable protection of fiber optic splices in the harshest of environments to create a durable and dependable splice case for protecting fiber optic splices in the harshest of environments.

FEATURES AND BENEFITS

- Impact and corrosion-resistant stainless steel shells
- LOCKBAR™ Fastener System allows re-entry without specialty kits/supplies
- High cable pull-out strength with LOCK-TAPE™ Sealant System
- Fiber organizer system for routing plastic buffer tubes
- Accommodates long COYOTE Splice Trays
- Standard splice case kits include the necessary materials for preparing, routing, and splicing OPGW cables up to 36 splices
- Standard splice case kits are designed for butt-style applications and include one blank two-section end plate and one field-drilled three-section end plate for installing up to four OPGW cables or a combination of OPGW and ADSS
- For applications with stainless steel buffer tubes, contact PLP

SPECIFICATIONS

COYOTE Stainless Steel Splice Case

Closure	6.5" x 28" Stainless Steel Splice Case
Catalog Number	8006654
Buffer Tube Type	Plastic
Catalog Number	8006654
Maximum Splice Tray Capacity	36 **(Catalog Number: 80805514)**
Maximum Splice Capacity (Single Fusion)	180
Cable Entries	4
Cable Diameters (OPGW)	0.36" – 1.10" (9.1 - 27.9 mm)
Configuration	Butt
Applications	Pole/Wall & Aerial
Ingress Protection	IP-67

For applications with stainless steel buffer tubes, contact PLP.

DIMENSIONS

Splice Case

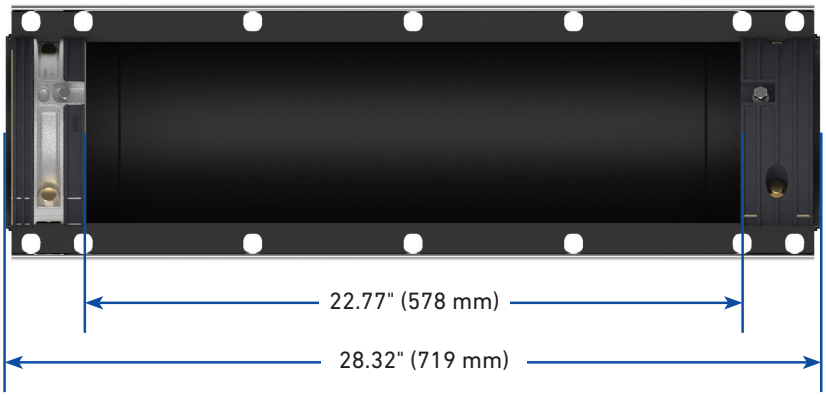

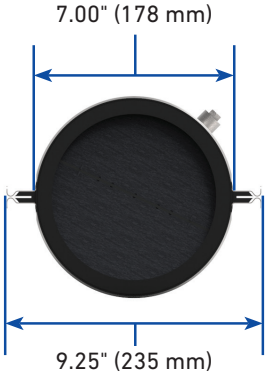

End Plate

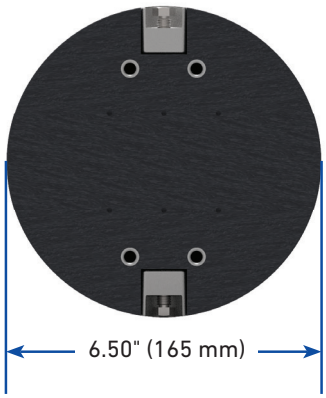

COMPONENTS

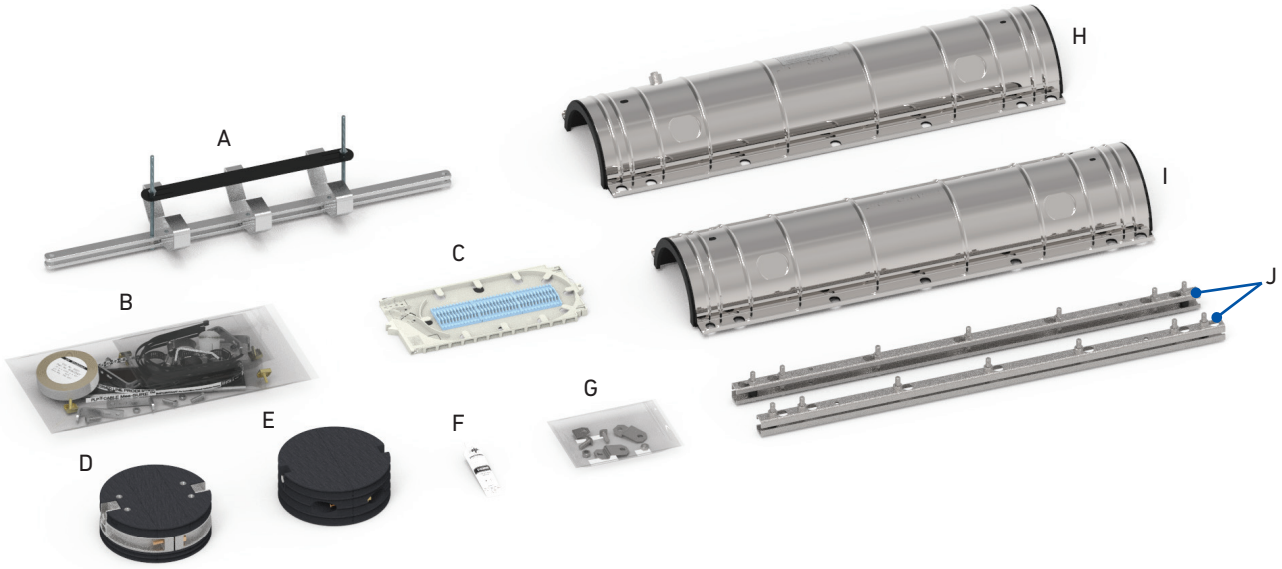

6.5" x 28" COYOTE Stainless Steel Splice Case for OPGW

Component	Description
A	6.5" x 28" COYOTE Stainless Steel Splice Case Buffer Tube Organizer
B	End Plate Kit Small Parts Bag
C	COYOTE Legacy Long Standard Profile 36 CT. Splice Tray **(Catalog Number: 80805514)**
D	6.5", 3-Section Drillable End Plate with 4 Inserts
E	6.5", 2-Section Drillable End Plate
F	1 oz Tube of C-Cement
G	Hanger Bracket Small Parts Bag
H	6.5" x 28" COYOTE Stainless Steel Splice Case Top Shell Half with Air Flange
I	6.5" x 28" COYOTE Stainless Steel Splice Case Bottom Shell Half
J	LOCKBAR™ Set

ACCESSORIES

Splice Tray Kits

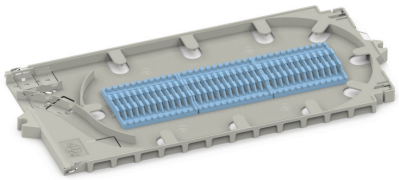

COYOTE Legacy Long Standard Profile 36 CT. Splice Tray for Single Fusion Splices (**Catalog Number: 80805514**)

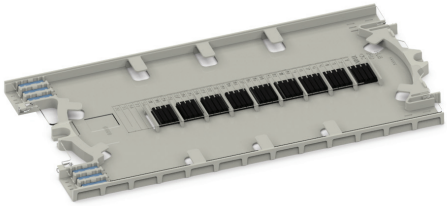

COYOTE LITE-GRIP® Long Standard Profile 36 CT. Splice Tray for Single Fusion Splices (**Catalog Number: 80810086**)

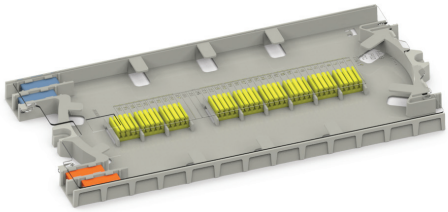

COYOTE LITE-GRIP® Long Deep Profile 72 CT. Splice Tray for Single Fusion Splices (**Catalog Number: LGSTS72**)

ACCESSORIES

Installation Materials & Tools

Catalog Number	Description
80804986	3-Section Drillable End Plate Kit for 6.5" COYOTE Stainless Steel Splice Cases
8003421	3/4" (19 mm) Field-Installed Future Cable Port Kit – Maximum Cable Diameter: 0.80" (20 mm)
8003422	1" (25 mm) Field-Installed Future Cable Port Kit – Maximum Cable Diameter: 1.00" (25 mm
8003411	Green Sealant Kit
8003175	Strength Member Restraint Bracket Kit
80805937	Air Valve for Stainless Steel Splice Cases
80813345	Heat Shrink Splice Protector Kit – Includes (36) 40 mm Single Fusion
8000454	Power End Plate Cutter with Carrying Case and Blade Kit
8000455	Power End Plate Cutter with Blade Kit
80851659	Electric Drill with Socket
8000428	Socket Tool Kit with Torque Wrench
8000432	End Plate Removal Tool

MOUNTING ACCESSORIES

- The Lattice Tower Clamp Kit is used for mounting the SLACKLOOP® 60" Cable Storage or the Defender directly to lattice towers with tower members up to 1-1/8" thick. Two Lattice Tower Clamps are required for each installation.
- 5/8" through bolts, 5/8" double-arming bolts, and banding are not supplied with any of the kits listed below..

Catalog Number	Description
8003472	Vertical Mounting Bracket for 6.5", 8" and 9.5" (165, 203, and 241) COYOTE Splice Cases. Includes two brackets and associated hardware (curved or flat surfaces)
8003491	COYOTE Defender with Mounting Bracket Kit for the COYOTE® 6.5" x 22", 6.5" x 28", 8" x 28", and 9.5" x 28" Splice Cases
8003569	SLACKLOOP® Adjustable Spool Cable Storage
80061195	SLACKLOOP 60" Cable Storage
LTC-1	Lattice Tower Clamp Kit with 6" Long Bolt

ORDERING INFORMATION

- The splice case kit listed below is suitable for OPGW with plastic buffer tubes. OPGW with stainless steel buffer tubes requires splice case kits that include an organizer with a slack basket. Contact PLP for more information.
- 6.5" x 28" COYOTE Stainless Steel Splice Case Kits for OPGW can be customized to include the appropriate splice tray(s) and accessories required for specific applications. Contact PLP for details.

Catalog Number	Description
8006654	6.5" x 28" COYOTE Stainless Steel Splice Case for OPGW

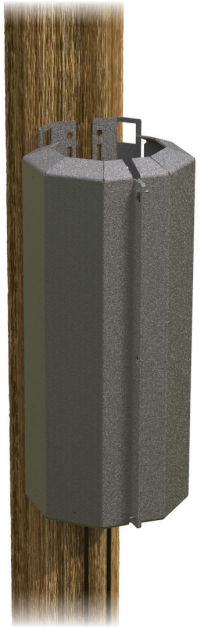

COYOTE® DEFENDER

BALLISTIC PROTECTION

The **COYOTE Defender** provides added protection for PLP splice enclosures that are mounted vertically on a structure. It consists of a mounting frame and two large doors that surround the splice enclosure. The factory-assembled mounting frame has two vertical brackets, two hinge brackets, and an adjustable bracket for mounting splice enclosures within the Defender.

FEATURES AND BENEFITS

- Provides ballistic protection for various PLP splice enclosures, including 9.5" COYOTE Dome Closures and COYOTE Stainless Steel Splice Cases (6.5" x 22", 6.5" x 28", 8" x 28", & 9.5" x 28")
- Adjustable horizontal bracket accommodates splice enclosures that do not align with the default position
- Two large, removable doors allow easy access for future maintenance or expansion
- Steel components are galvanized or zinc plated to prevent corrosion
- Can be bolted or banded to a pole/structure with 5/8" through bolts, 5/8" double-arming bolts, or 1-1/2" steel banding
- Slots in the top and the bottom of the frame allow crossarms of the SLACKLOOP® Adjustable Cable Storage to be installed to provide slack cable storage
- Can be mounted to the SLACKLOOP® 60" Cable Storage to provide slack cable storage

COMPONENTS

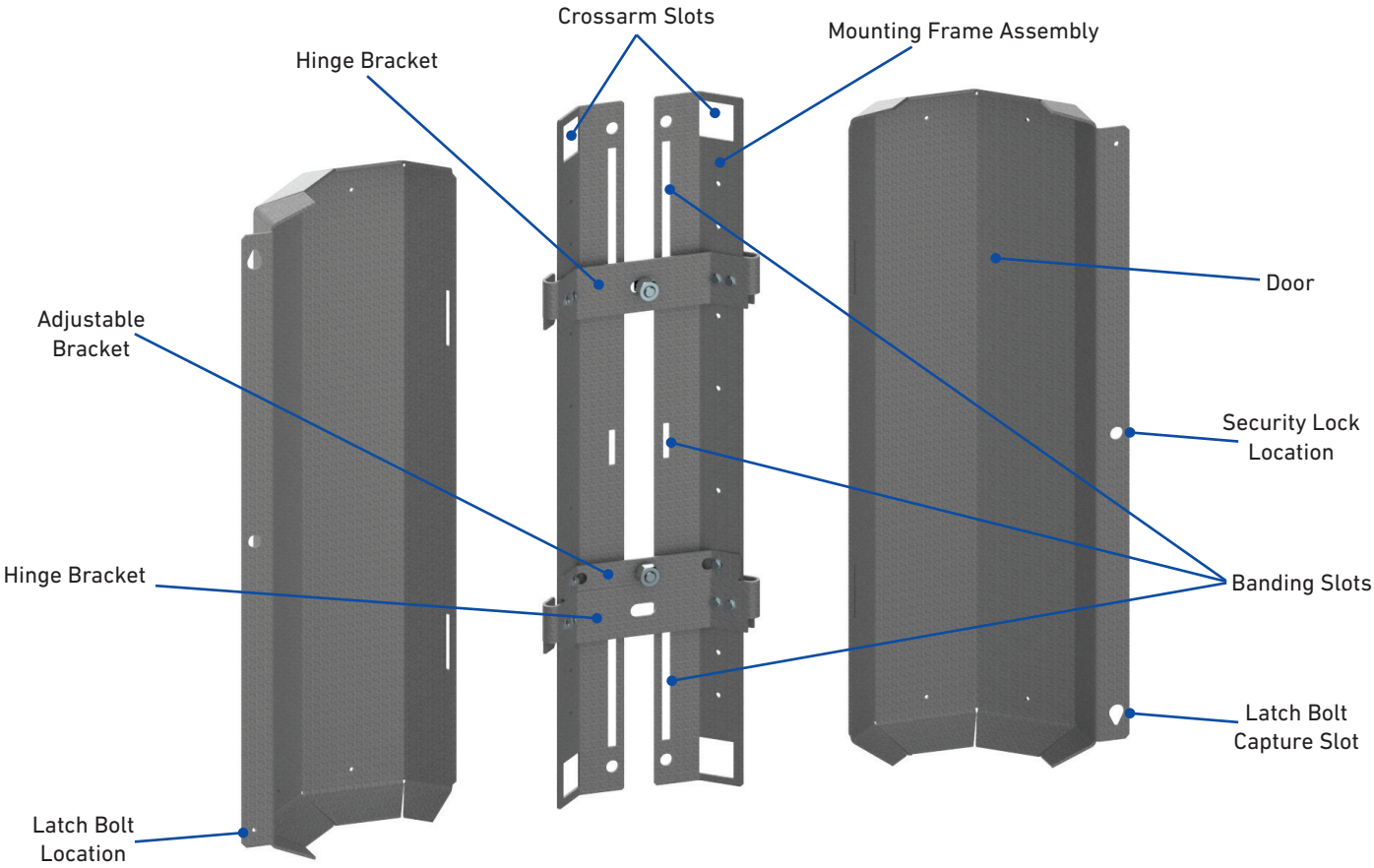

ORDERING INFORMATION

- Select the appropriate COYOTE Defender Kit and either the SLACKLOOP® Adjustable Cable Storage or the SLACKLOOP® 60" Cable Storage based on the configurations shown in the chart below.
- 5/8" through bolts, 5/8" double-arming bolts, and banding are not supplied with the kits listed below.
- When using the SLACKLOOP® Adjustable Cable Storage with the COYOTE Defender for 9.5" COYOTE Dome Closure applications, the bottom crossarm cannot be inserted through the bottom slots of the Defender and will need to be mounted directly to the structure/pole underneath the Defender
- The Lattice Tower Clamp Kit is used for mounting the SLACKLOOP® 60" Cable Storage and the Defender directly to lattice towers with tower members up to 1-1/8" thick. Do not order Lattice Tower Clamp Kits for pole mounting applications.

COYOTE Defender with Vertical SLACKLOOP System Configurations

Component	SLACKLOOP Adjustable Cable Storage				SLACKLOOP 60" Cable Storage			
	9.5" COYOTE Dome Closure Applications		COYOTE 6.5" x 22", 6.5" x 28", 8" x 28", & 9.5" x 28" Splice Case Applications		9.5" COYOTE Dome Closure Applications		COYOTE 6.5" x 22", 6.5" x 28", 8" x 28", & 9.5" x 28" Splice Case Applications	
	Qty	Catalog Number	Qty	Catalog Number	Qty	Catalog Number	Qty	Catalog Number
COYOTE Defender	1	8003512	1	8003491	1	8003512	1	8003491
SLACKLOOP System	1	8003569	1	8003569	1	80061195	1	80061195
Lattice Tower Clamp	2	LTC-1	2	LTC-1	2	LTC-1	2	LTC-1

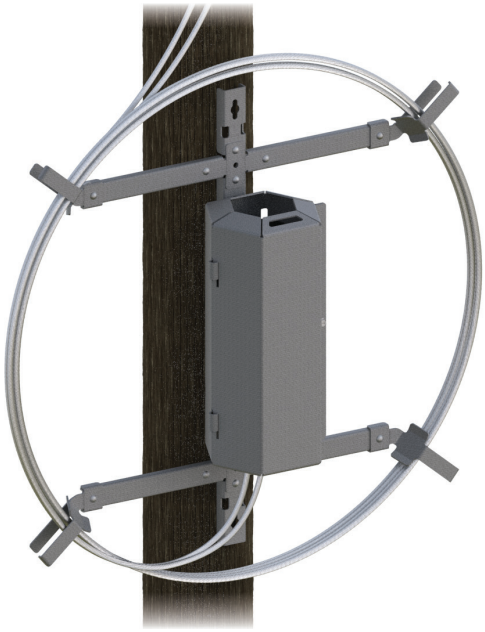

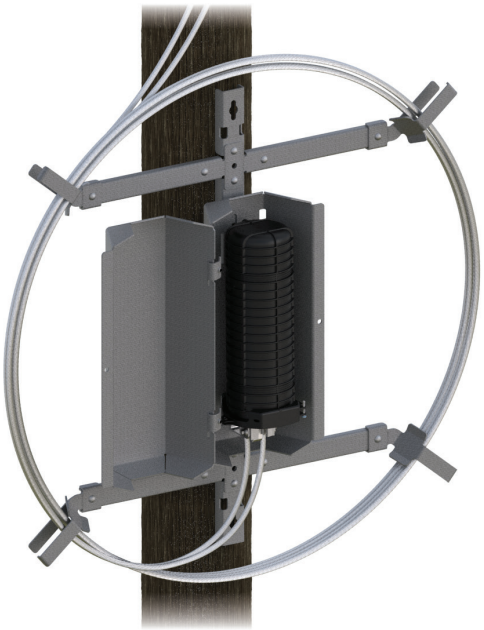

COYOTE® DEFENDER 2

BALLISTIC PROTECTION

The **COYOTE Defender 2** provides added protection for 6.5" COYOTE Dome Closures with the FIBERLIGN® OPGW CRB System that are mounted vertically on a pole or structure. It consists of a mounting base and a hinged door that swings open for easy access to the splice closure.

FEATURES AND BENEFITS

- Provides ballistic protection for 6.5" x 17" and 6.5" x 22" COYOTE Dome Closures with the FIBERLIGN OPGW CRB System
- Weighs a third less than the COYOTE Defender without sacrificing the level of ballistic protection
- Both the mounting base and the hinged door have a 7 gauge steel thickness and weighs under 37 lb
- Steel components are galvanized or zinc plated to prevent corrosion
- Can be bolted or banded directly to a pole/structure with 5/8" through bolts, 5/8" double-arming bolts, or 1-1/4" steel banding
- Can be mounted to the SLACKLOOP® 60" Cable Storage to provide slack cable storage

COMPONENTS

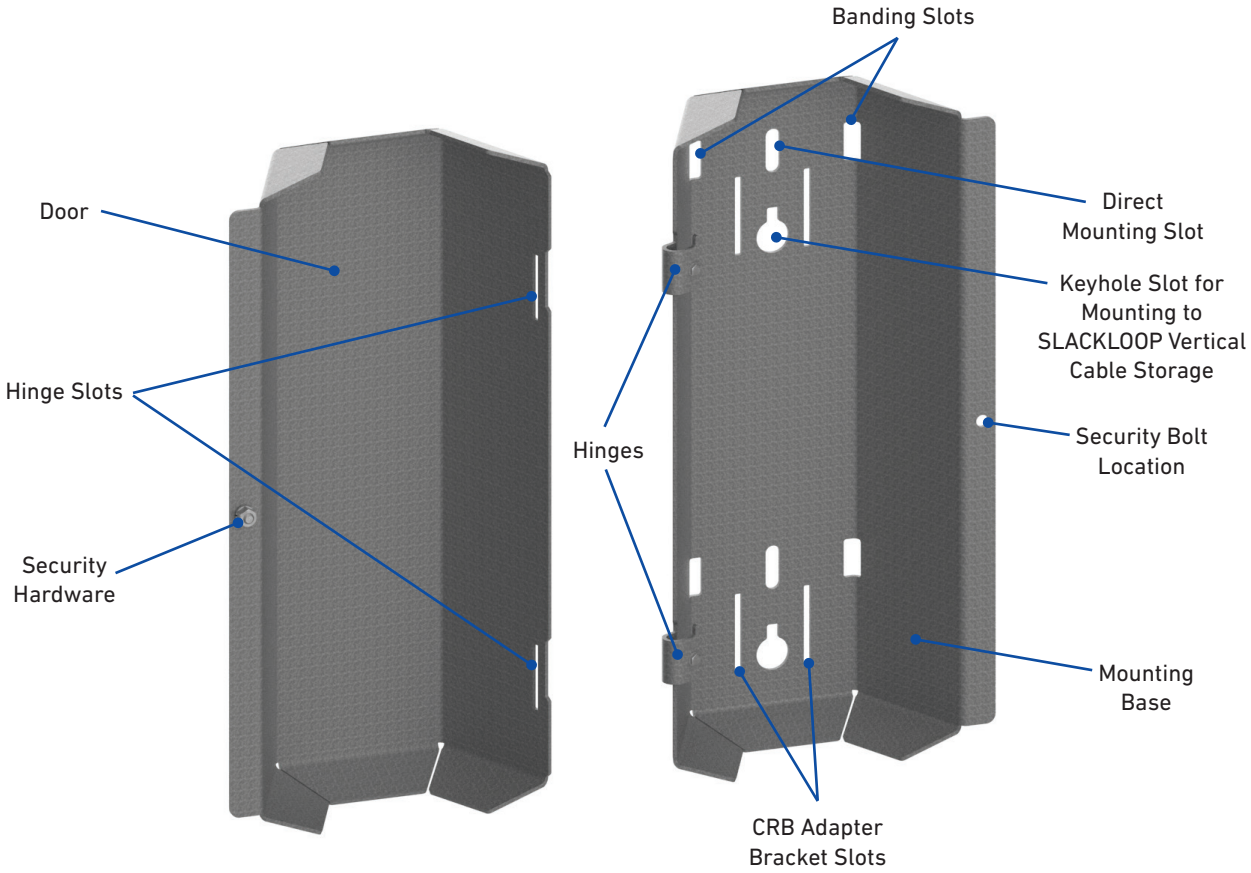

ORDERING INFORMATION

- 5/8" through bolts, 5/8" double-arming bolts, and banding are not supplied with the kits listed below.
- The Lattice Tower Clamp Kit is used for mounting the SLACKLOOP® 60" Cable Storage and the Defender directly to lattice towers with tower members up to 1-1/8" thick. Do not order Lattice Tower Clamp Kits for pole mounting applications.

COYOTE Defender 2 with Vertical SLACKLOOP System Configurations

Component	6.5" COYOTE Dome Closures with FIBERLIGN OPGW CRB Applications	
	Qty	Catalog Number
COYOTE Defender 2	1	80061194
SLACKLOOP® 60" Cable Storage	1	80061195
Lattice Tower Clamp	2	LTC-1

SECTION 5

POLE HARDWARE

FIBERLIGN® OPGW HARDWARE

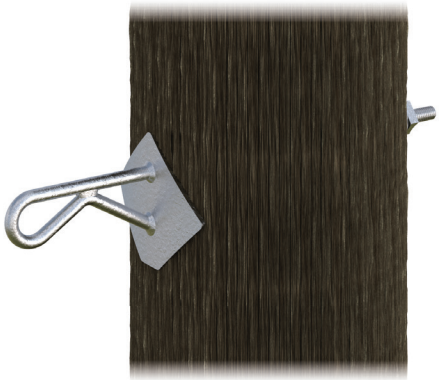

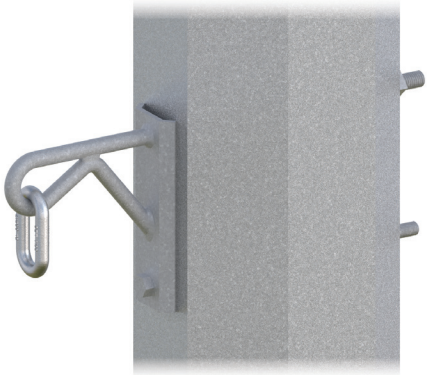

FIBERLIGN® SHIELD WIRE BRACKET

FIBERLIGN Shield Wire Brackets offer a superior connection to the structure through a single-piece bracket design. The extended standoff design allows for ample clearance from the structure, preventing incidental wear on tangent hardware at the structure. A welded washer provides additional strength and ease of installation in the field.

FEATURES AND BENEFITS

- Available in three sizes: 5/8" (15.9 mm), 3/4" (19.1 mm), and 7/8" (22.2 mm)
- Each size can be ordered with a 1/2" or 5/8" chain link to provide proper orientation for attaching tangent hardware
- Extended standoff design allows for greater space between the structure and tangent hardware
- Welded surface plate provides additional strength and stability for the eyebolt at the structure interface
- Welded washer provides additional strength and retains the washer for ease of application
- Square nut washer and concave lock nut ensure proper engagement with the structure
- Accepts poles and structures of various diameters and thicknesses
- Rated to meet or exceed a vertical load of 5,000 lb
- Galvanized per ASTM A-153

DIMENSIONS – 5/8" SHIELD WIRE BRACKETS

5/8" Shield Wire Bracket

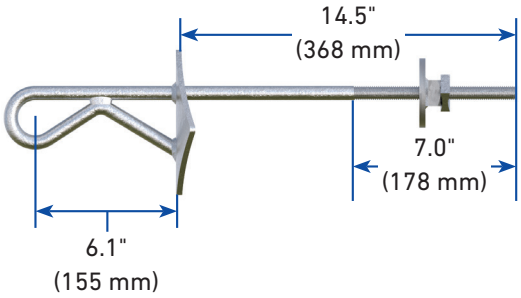

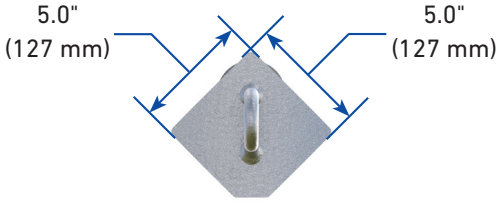

5/8" Shield Wire Bracket with 1/2" Chain Link

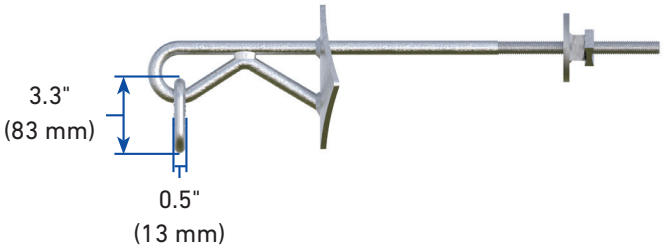

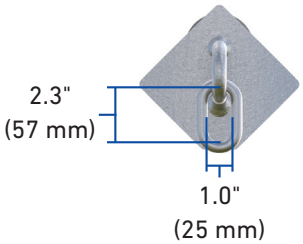

5/8" Shield Wire Bracket with 5/8" Chain Link

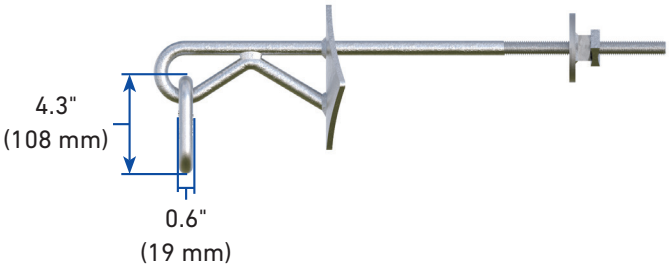

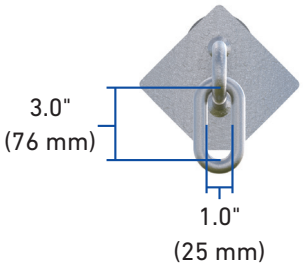

ORDERING INFORMATION – 5/8" SHIELD WIRE BRACKETS

- Select the appropriate catalog number based on the acceptable attachment fitting diameter for the OPGW hardware
- 1/2" chain links are typical for 5/8" shield wire brackets

Catalog Number	Description	Vertical Load Rating (lb)
710016015	5/8" Shield Wire Bracket	5,000
710016015L1	5/8" Shield Wire Bracket with 1/2" Chain Link	5,000
710016015L2	5/8" Shield Wire Bracket with 5/8" Chain Link	5,000

DIMENSIONS – 3/4" SHIELD WIRE BRACKETS

3/4" Shield Wire Bracket

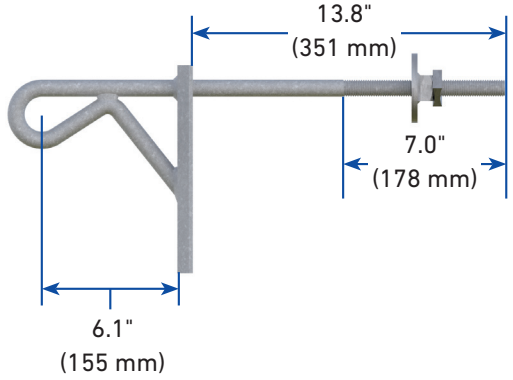

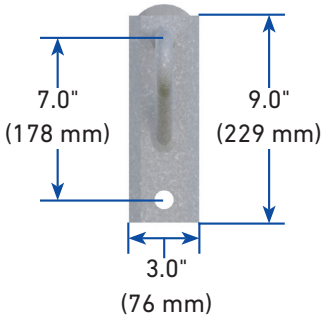

3/4" Shield Wire Bracket with 1/2" Chain Link

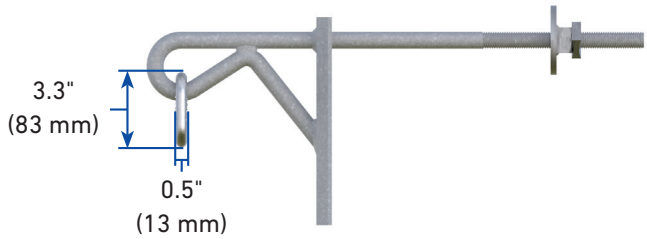

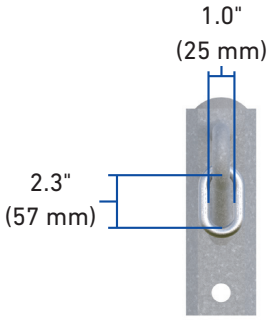

3/4" Shield Wire Bracket with 5/8" Chain Link

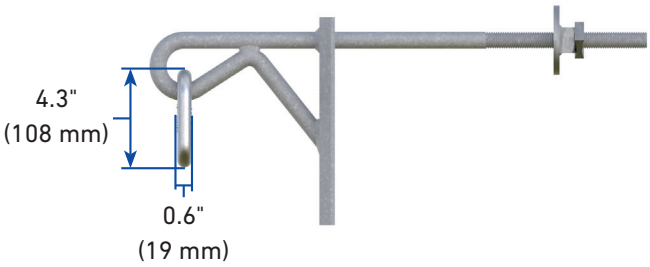

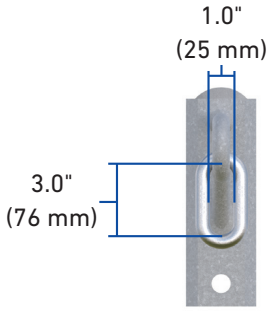

ORDERING INFORMATION – 3/4" SHIELD WIRE BRACKETS

- Select the appropriate catalog number based on the acceptable attachment fitting diameter for the OPGW hardware
- 5/8" chain links are typical for 3/4" shield wire brackets

Catalog Number	Description	Vertical Load Rating (lb)
710016012	3/4" Shield Wire Bracket	5,000
710016012L1	3/4" Shield Wire Bracket with 1/2" Chain Link	5,000
710016012L2	3/4" Shield Wire Bracket with 5/8" Chain Link	5,000

DIMENSIONS – 7/8" SHIELD WIRE BRACKETS

7/8" Shield Wire Bracket

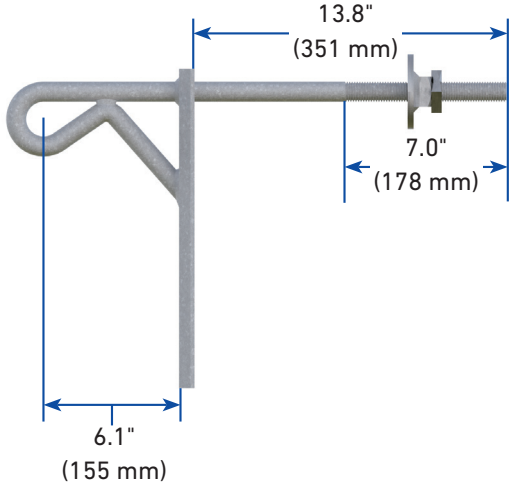

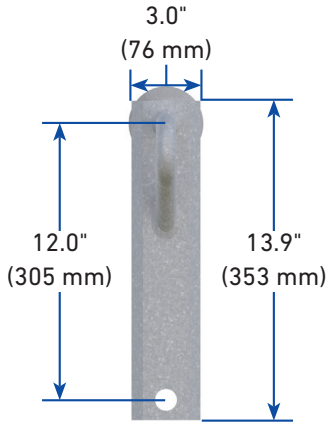

7/8" Shield Wire Bracket with 1/2" Chain Link

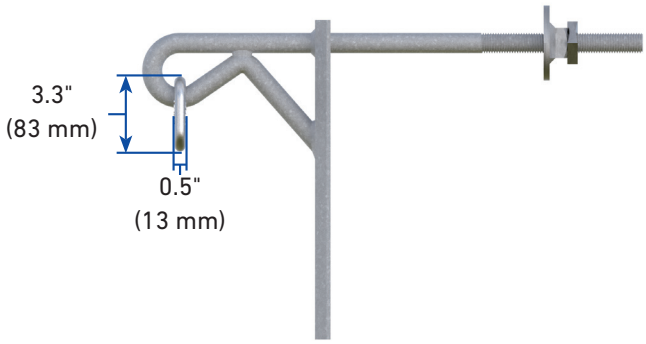

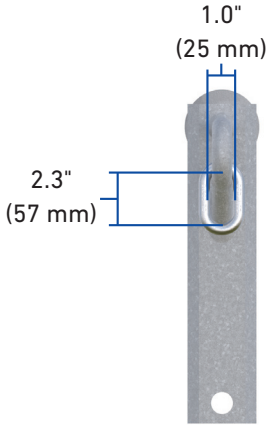

7/8" Shield Wire Bracket with 5/8" Chain Link

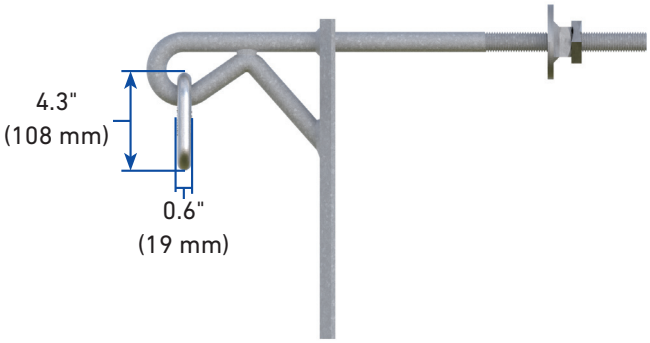

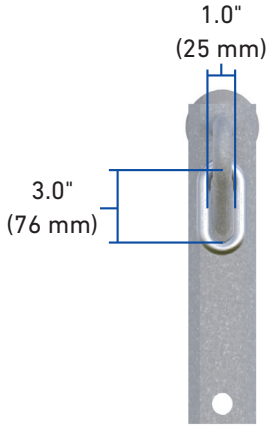

ORDERING INFORMATION – 7/8" SHIELD WIRE BRACKETS

- Select the appropriate catalog number based on the acceptable attachment fitting diameter for the OPGW hardware
- 5/8" chain links are typical for 7/8" shield wire brackets

Catalog Number	Description	Vertical Load Rating (lb)
710016013	7/8" Shield Wire Bracket	5,000
710016013L1	7/8" Shield Wire Bracket with 1/2" Chain Link	5,000
710016013L2	7/8" Shield Wire Bracket with 5/8" Chain Link	5,000

FIBERLIGN® DOWNLEAD CUSHION

The **FIBERLIGN Downlead Cushion** secures OPGW downleads to poles or structures while minimizing compressive clamping forces which could be transferred to the optical elements. The Downlead Cushion is a two-piece design with a base and cap that has parallel grooves to accommodate specified OPGW diameters. Various mounting accessories can be included to install the Downlead Cushion on different types of utility poles and structures, including lattice towers.

FEATURES AND BENEFITS

- Firmly secures OPGW to poles and structures without compromising OPGW integrity
- Standard cushion has two grooves to support each OPGW downlead
- Made from an all-aluminum alloy that provides an electrical path from the OPGW to the structure for bonding purposes or urethane
- Kits can include mounting accessories to secure the downlead cushion to poles (wood, concrete, or metal) or lattice towers

COMPONENTS

Aluminum Downlead Cushion

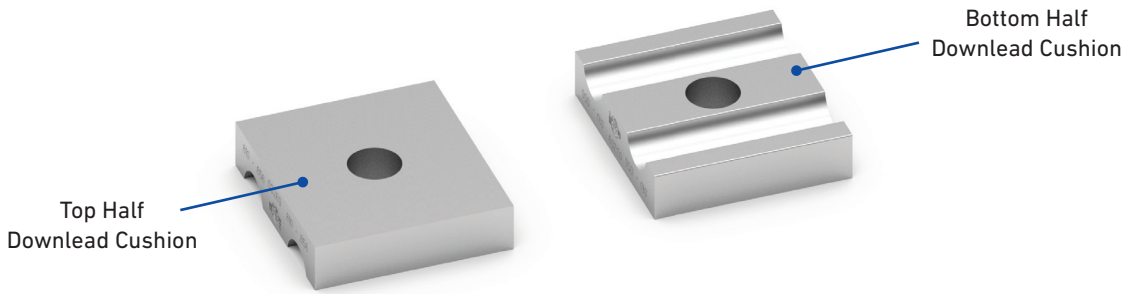

Urethane Downlead Cushion

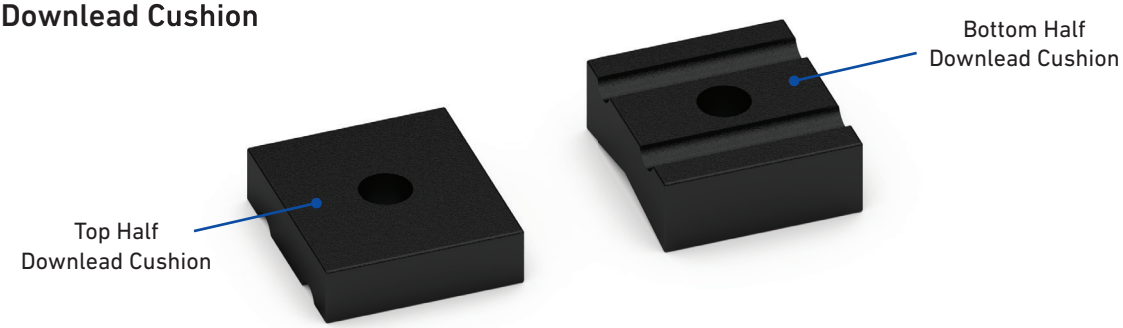

MOUNTING ACCESSORIES

- Select the appropriate mounting kit based on the type of pole or structure used.
- Order the 1/2"-13 UNC Hex Head Bolt Hardware Kit when mounting a Downlead Cushion to a metal or concrete pole with a 1/2"-13 UNC female interface.
- The Banding Bracket Kit does not include banding to mount the bracket to the pole. Banding must be purchased separately. **NOTE:** The Banding Bracket can accept up to 1-1/4" wide banding.

Wood Pole

Wood Pole Mounting Hardware Kit
(Suffix Code: H1)
(Catalog Number: 710010017)

Metal or Concrete Pole

1/2"-13 UNC Hex Head Bolt Hardware Kit
(Suffix Code: H3)
(Catalog Number: 710011655)

Banding Bracket Kit
(Suffix Code: B1)
(Catalog Number: 710010576)

MOUNTING ACCESSORIES

FIBERLIGN®

- Lattice Tower Clamp Kits are for mounting Downlead Cushions to lattice towers with tower members up to 1-1/8" thick.
- Order the Metal Pole/Lattice Tower Clamp Kit when mounting a Downlead Cushion from a ladder clip of a metal pole that is 1/2" thick and has an opening of 1-1/2" wide or from lattice tower members up to 1-1/8" thick.
- Order the Horizontal Metal Pole/Lattice Tower Clamp Kit when mounting a Downlead Cushion from a ladder clip of a metal pole that is 1/2" thick and has an opening of 1-1/2" wide or the edge of a lattice tower member up to 1-1/8" thick.

Lattice Tower

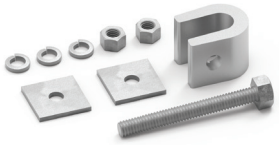

Lattice Tower Clamp Kit with 6" Long Bolt
(Suffix Code: LTC1)
(Catalog Number: LTC-1)

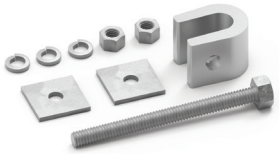

Lattice Tower Clamp Kit with
8" Long Bolt
(Catalog Number: 7000402)

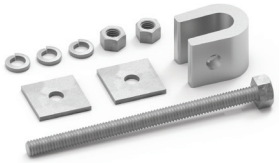

Lattice Tower Clamp Kit with
10" Long Bolt
(Catalog Number: 7000401)

Light-Duty Lattice Tower Clamp Kit
(Suffix Code: LTC2)
(Catalog Number: LTC-2)

Metal Pole or Lattice Tower

Metal Pole/Lattice Tower Clamp Kit
(Catalog Number: 710015838)

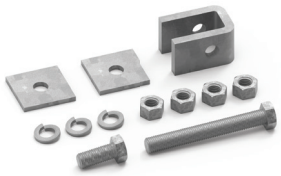

Horizontal Metal Pole/Lattice Tower Clamp Kit
(Catalog Number: 710016505)

FIBERLIGN Aluminum Downlead Cushion
for OPGW Mounted to Steel Pole with
Metal Pole/Lattice Tower Clamp Kit

FIBERLIGN Urethane Downlead Cushion for
OPGW Mounted to Steel Pole with Horizontal
Metal Pole/Lattice Tower Clamp Kit

ORDERING INFORMATION

- Select the appropriate catalog number for the Downlead Cushion from the table below using the OPGW diameter and the type of pole or structure the Downlead Cushion will be mounted to.
- Order the Downlead Cushion with the 1/2"-13 UNC Hex Head Bolt Hardware Kit when the Downlead Cushion is being mounted to a metal or concrete pole with a 1/2"-13 UNC female interface.
- Downlead Cushions that are ordered with the Banding Bracket Kit do not include banding to mount the bracket to the pole. Banding must be purchased separately. **NOTE:** The banding bracket can accept up to 1-1/4" wide banding.
- Downlead Cushions ordered with the Lattice Tower Clamp Kit are used for mounting the cushions to lattice towers with tower members up to 1-1/8" thick.

Aluminum Downlead Cushion

Catalog Number						OPGW Diameter Range	
Cushion Only	Cushion with Wood Pole Mounting Hardware Kit	Cushion with 1/2"-13 UNC Hex Head Bolt Hardware Kit	Cushion with Banding Bracket Kit	Cushion with Lattice Tower Clamp Kit	Cushion with Light-Duty Lattice Tower Clamp Kit	in	mm
8003644	8003644H1	8003644H3	8003644B1	8003644LTC1	8003644LTC2	0.328 – 0.374	8.3 – 9.5
8003654	8003654H1	8003654H3	8003654B1	8003654LTC1	8003654LTC2	0.375 – 0.422	9.5 – 10.6
8003653	8003653H1	8003653H3	8003653B1	8003653LTC1	8003653LTC2	0.423 – 0.468	10.7 – 11.8
8003266	8003266H1	8003266H3	8003266B1	8003266LTC1	8003266LTC2	0.469 – 0.515	11.9 – 13.0
8003267	8003267H1	8003267H3	8003267B1	8003267LTC1	8003267LTC2	0.516 – 0.562	13.1 – 14.2
8003268	8003268H1	8003268H3	8003268B1	8003268LTC1	8003268LTC2	0.563 – 0.609	14.3 – 15.4
8003269	8003269H1	8003269H3	8003269B1	8003269LTC1	8003269LTC2	0.610 – 0.656	15.5 – 16.6
8003270	8003270H1	8003270H3	8003270B1	8003270LTC1	8003270LTC2	0.657 – 0.703	16.7 – 17.8
8003271	8003271H1	8003271H3	8003271B1	8003271LTC1	8003271LTC2	0.704 – 0.750	17.9 – 19.0
8003477	8003477H1	8003477H3	8003477B1	8003477LTC1	8003477LTC2	0.751 – 0.797	19.1 – 20.2

Urethane Downlead Cushion

Catalog Number						OPGW Diameter Range	
Cushion Only	Cushion with Wood Pole Mounting Hardware Kit	Cushion with 1/2"-13 UNC Hex Head Bolt Hardware Kit	Cushion with Banding Bracket Kit	Cushion with Lattice Tower Clamp Kit	Cushion with Light-Duty Lattice Tower Clamp Kit	in	mm
8003806	8003806H1	8003806H3	8003806B1	8003806LTC1	8003806LTC2	0.280 – 0.374	7.1 – 9.4
8003041	8003041H1	8003041H3	8003041B1	8003041LTC1	8003041LTC2	0.375 – 0.468	9.5 – 11.8
8003042	8003042H1	8003042H3	8003042B1	8003042LTC1	8003042LTC2	0.469 – 0.562	11.9 – 14.2
8003043	8003043H1	8003043H3	8003043B1	8003043LTC1	8003043LTC2	0.563 – 0.656	14.3 – 16.6
8003044	8003044H1	8003044H3	8003044B1	8003044LTC1	8003044LTC2	0.657 – 0.750	16.7 – 19.0
8003052	8003052H1	8003052H3	8003052B1	8003052LTC1	8003052LTC2	0.751 – 0.849	19.1 – 21.5
8003256	8003256H1	8003256H3	8003256B1	8003256LTC1	8003256LTC2	0.850 – 0.950	21.6 – 24.1
8003257	8003257H1	8003257H3	8003257B1	8003257LTC1	8003257LTC2	0.951 – 1.050	24.2 – 26.6
8003379	8003379H1	8003379H3	8003379B1	8003379LTC1	8003379LTC2	1.051 – 1.190	26.7 – 30.2

FIBERLIGN Aluminum Downlead Cushion for OPGW Mounted to Wood Pole (Suffix Code: H1)

FIBERLIGN Urethane Downlead Cushion for OPGW Mounted to Steel Pole (Suffix Code: H3)

FIBERLIGN Aluminum Downlead Cushion for OPGW Mounted to Lattice Tower (Suffix Code: LTC1)

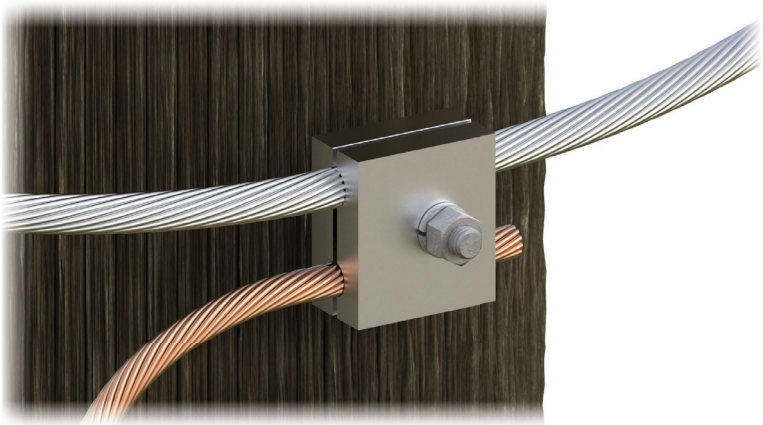

SECTION 6

ACCESSORIES

FIBERLIGN® OPGW HARDWARE

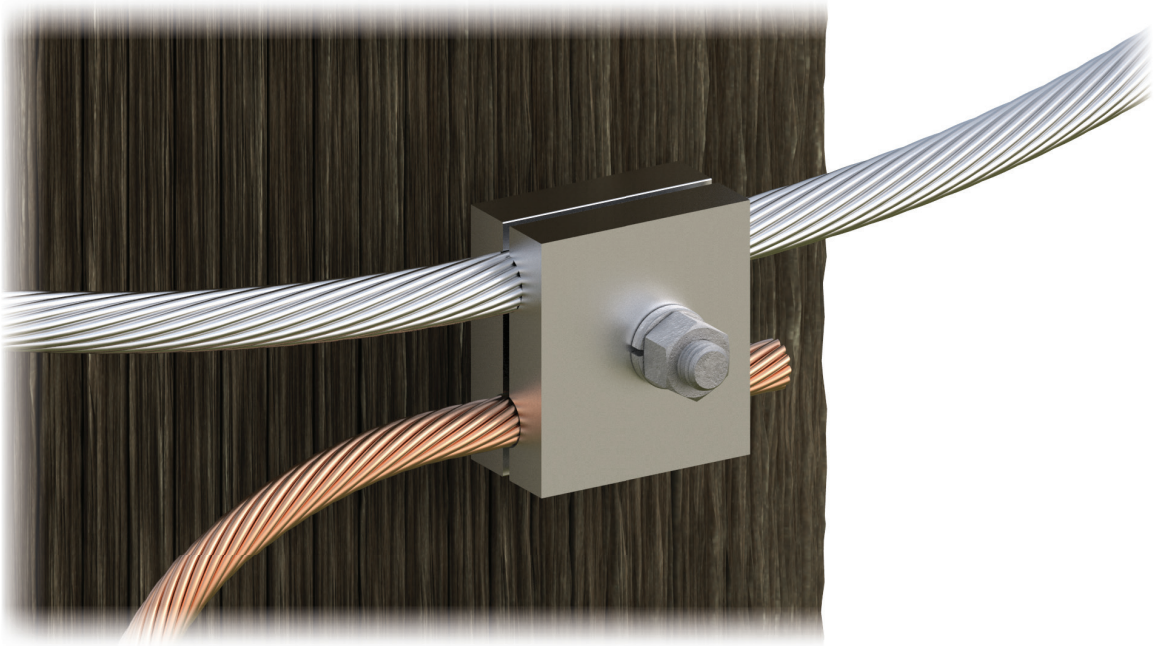

FIBERLIGN® GROUND CLAMP

The **FIBERLIGN Ground Clamp** has parallel grooves designed to capture and bond OPGW to the structure ground wire. The aluminum alloy clamps include oxide inhibitor in the grooves and a bolt, nut, and lock-washer.

FEATURES AND BENEFITS

- Each aluminum alloy clamp contains two parallel grooves, one for OPGW and one for a ground wire
- Grooves contain oxide inhibitor
- Clamp halves are secured together with a galvanized steel 1/2"-13 x 2-1/4" hex bolt, 1/2" lock washer, and 1/2"-13 hex nut
- Ground Clamps have a 25 ft-lb installation torque

COMPONENTS

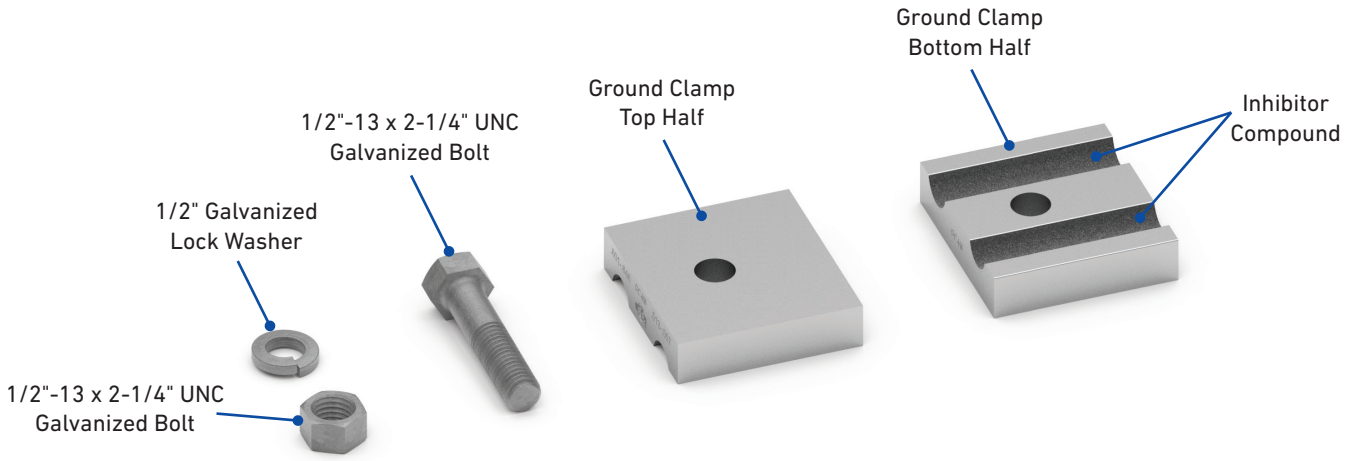

ORDERING INFORMATION

• Complete the catalog number for the desired Ground Clamp by selecting the appropriate suffix codes from on the tables below.

FIBERLIGN Ground Clamp Catalog Number

GC-___X___ ___X___
(Section 1) (Section 2)

Catalog Number Example: GC-H6
Includes (1) Ground Clamp for OPGW Diameter Range 0.601" – 0.646" and Ground Wire Diameter Range 0.513" – 0.557"

Section 1

Suffix Code (Groove A)	OPGW Diameter Range	
	in	mm
A	0.328 – 0.372	8.3 – 9.3
B	0.373 – 0.418	9.4 – 10.6
C	0.419 – 0.464	10.7 – 11.8
D	0.465 – 0.510	11.9 – 12.9
E	0.511 – 0.557	13.0 – 14.1
F	0.558 – 0.600	14.2 – 15.2
H	0.601 – 0.646	15.3 – 16.5
I	0.647 – 0.690	16.6 – 17.5
J	0.691 – 0.720	17.6 – 18.3
K	0.721 – 0.750	18.4 – 19.0
L	0.751 – 0.796	19.1 – 20.2

Section 2

Suffix Code (Groove B)	Ground Wire Diameter Range	
	in	mm
1	0.155 – 0.203	3.9 – 5.1
2	0.204 – 0.385	5.2 – 9.8
3	0.386 – 0.418	9.9 – 10.6
4	0.419 – 0.464	10.7 – 11.8
5	0.465 – 0.512	11.9 – 13.0
6	0.513 – 0.557	13.1 – 14.1
7	0.558 – 0.600	14.2 – 15.2
8	0.601 – 0.646	15.3 – 16.4
9	0.647 – 0.690	16.5 – 17.5

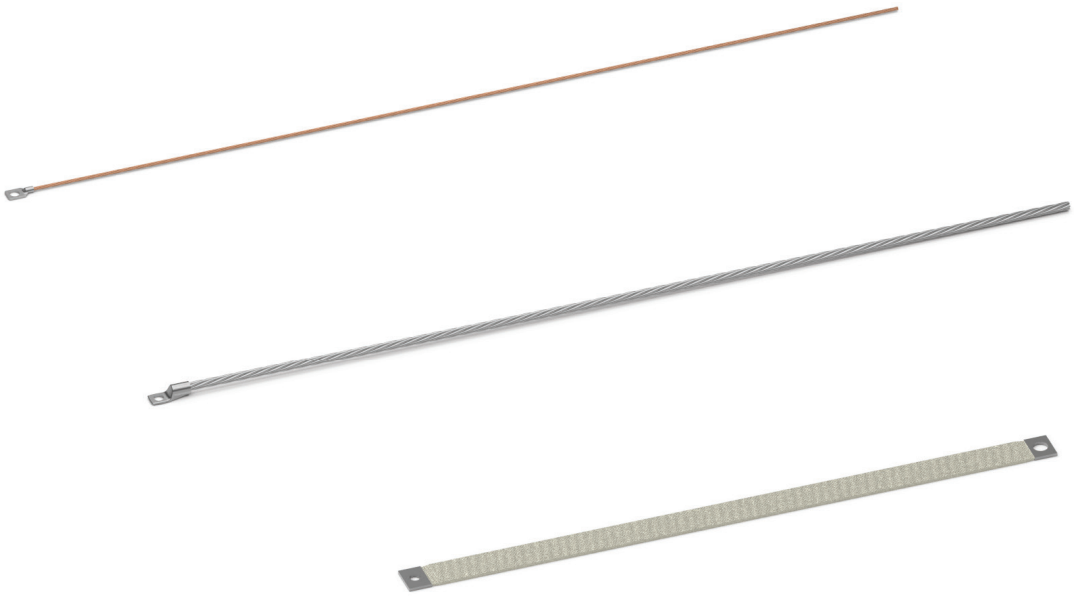

FIBERLIGN® GROUND WIRE ASSEMBLIES

FIBERLIGN Ground Wire Assemblies are used to ground OPGW attachment hardware to a grounded metal pole or structure or a separate ground wire that runs the length of the pole or structure.

FEATURES AND BENEFITS

- Made of conductive metals with at least one factory-installed terminal to connect it to the attachment hardware
- Available in different lengths with various combinations of terminals and bolt hole sizes to accommodate different connection types
- Stranded or braided wire construction
- Some Ground Wire Assemblies can be included with FIBERLIGN OPGW attachment hardware (Refer to each product section for availability)

ORDERING INFORMATION

• Select the appropriate catalog number based on the terminal bolt hole size(s), wire type, and length needed to connect the assembly

Stranded Ground Wire Assembly

Catalog Number	Wire Type	Wire Construction	Length		Number of Terminals	Terminal Bolt Hole Sizes		Includes Hardware (Bolts, Washers, Nuts)
			in	mm		Terminal 1	Terminal 2	
710010015	Copper	#4, 7 Wire	48	1,219	1	9/16"	–	Yes
710010016		#4, 7 Wire	48	1,219	1	9/16"	–	No
710010527		#4, 7 Wire	48	1,219	2	9/16"	9/16"	Yes
710010293	Aluminum	4/0, 7 Wire	48	1,219	1	1/2"	–	Yes
710010294		4/0, 7 Wire	48	1,219	1	1/2"	–	No
710010882		4/0, 7 Wire	120	3,048	1	1/2"	–	Yes
710010658		4/0, 19 Wire	48	1,219	2	1/2"	5/8"	Yes
710011205		95 mm², 19 Wire	60	1,524	2	1/2" (M12)	5/8" (M16)	Yes

48" (1,219 mm) Long #4 (7W) Copper Ground Wire Assembly
(Catalog Number: 710010016)

Flexible Braided Ground Wire Assembly

Catalog Number	Wire Type	Wire Construction	Length		Number of Terminals	Terminal Bolt Hole Sizes		Includes Hardware (Bolts, Washers, Nuts)
			in	mm		Terminal 1	Terminal 2	
710016687	Tinned Copper	1,536 Strands, 290 Ampacity	18	457	2	1/2"	1/2"	No
710017294			24	610	2	1/2"	1/2"	No
710016706			36	914	2	1/2"	1/2"	No
710016902			50	1,270	2	1/2"	1/2"	No
710016903			70	1,778	2	1/2"	1/2"	No
710016994			18	457	2	1/2"	3/4"	No
710017295			24	610	2	1/2"	3/4"	No
710016995			36	914	2	1/2"	3/4"	No
710016996			50	1,270	2	1/2"	3/4"	No
710016997			70	1,778	2	1/2"	3/4"	No

36" (914 mm) 1,536 Strands, 290 Ampacity Tinned Copper Braided Ground Assembly
(Catalog Number: 710016706)

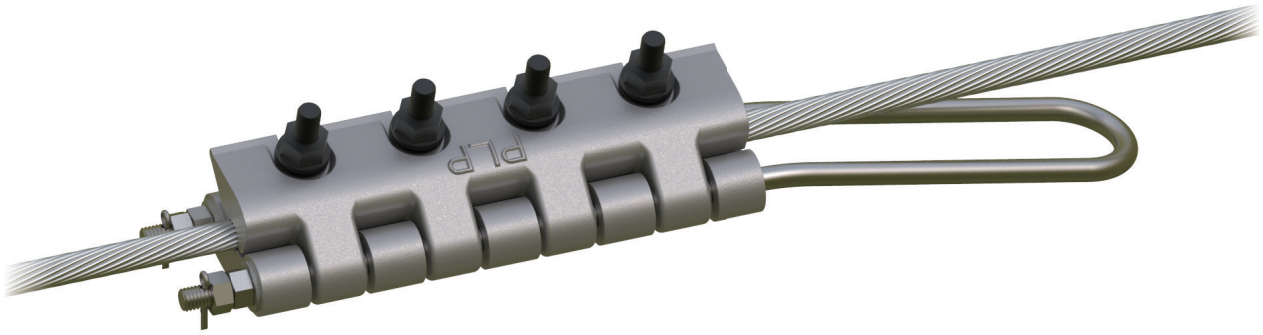

FIBERLIGN® OPTICAL TENSION DEVICE

The **FIBERLIGN Optical Tension Device** is designed for pulling OPGW fiber cable to final sag tension. Once the final sag has been achieved, a permanent type dead-end device should be installed promptly, followed by the removal of the tensioning device.

FEATURES AND BENEFITS

- Designed for OPGW cable with a diameter range of 0.350" – 0.820" (8.9 mm – 20.8 mm)
- Load rating of 50% of the rated breaking strength of the OPGW or 5,000 lb (24.4 kN), whichever is less
- Body and keeper are made from a high-strength aluminum alloy
- Pivoting harden steel eye bolt assemblies allow for quick installation of the device onto OPGW
- Spherical nuts and washers of the eye bolt assemblies prevent unequal load distribution on the keeper
- Steel bail is angled to allow clearance between the OPGW and the hoist and prevent damage to the OPGW during tensioning
- Double lock nuts and cotter pins prevent the bail from pulling out of the body while being tensioned
- Various designs are available to accommodate OPGW manufactured by specific suppliers

COMPONENTS

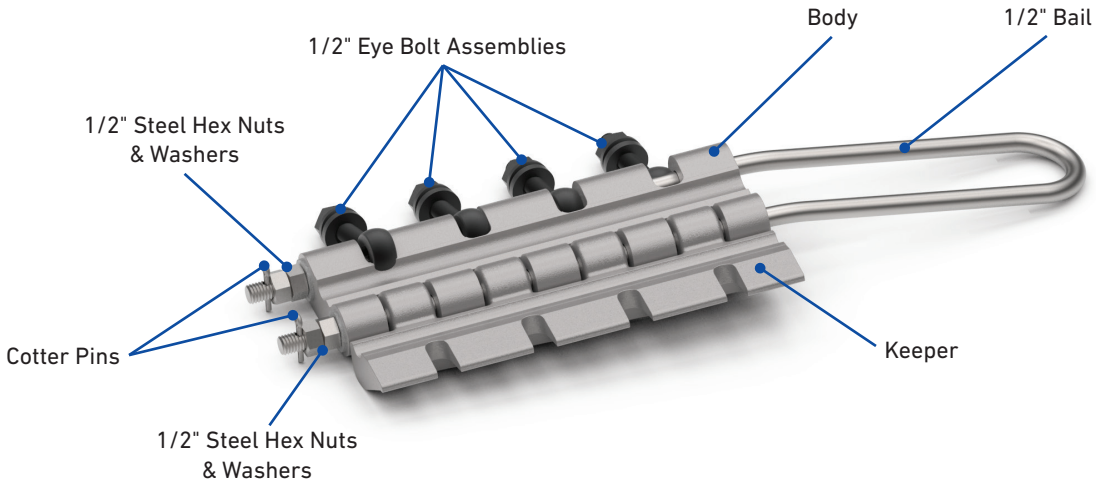

ORDERING INFORMATION

• Complete the catalog number by selecting the appropriate suffix codes from on the tables below

FIBERLIGN Optical Tension Device Catalog Number

OTD-__X__-__XXX__
(Section 1) (Section 2)

Catalog Number Example: OTD-A-724
Includes (1) Optical Tension Device for AFL .724" Diameter OPGW

Section 1

OPGW Supplier	
Suffix Code	Supplier Name
A	AFL
I	Incab
P	Prysmian
S	SFPOC
O	Other

Section 2

OPGW Diameter	
Suffix Code	in
350 – 820	0.350 – 0.820

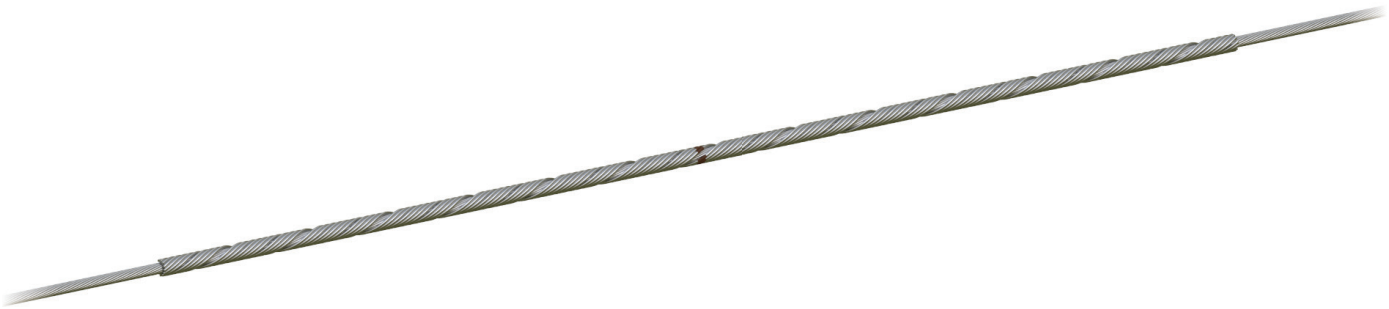

FIBERLIGN® REPAIR RODS

The **FIBERLIGN Repair Rods** are designed to repair the outer mechanical strand members of the OPGW cable. Repair Rods are not an optical repair product and are not designed as splices for all-metal overhead shield wire.

FEATURES AND BENEFITS

- Subsetted aluminum-clad steel rods with an inner bore that is coated with conductive grit
- Provides varying levels of mechanical and electrical repair depending upon the specific construction, stranding, and material of the OPGW
- Repairs mechanical damage of single-layer OPGW cables up to 50% of the rated breaking strength of the cable. Contact the OPGW manufacturer to verify the extent of damage that the specific design of OPGW can withstand without jeopardizing the performance of the fiber optic elements of the cable.

COMPONENTS

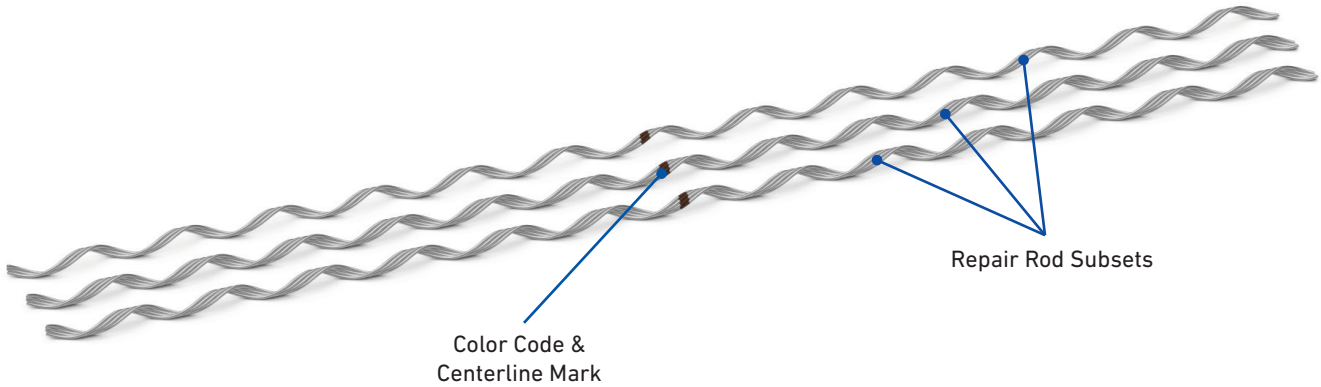

ORDERING INFORMATION

- Select the appropriate catalog number from the table below using the OPGW diameter.
- Standard repair rods are offered for left-hand lay single-layer strand OPGW. Repair rods for right-hand lay OPGW are available. Contact PLP with OPGW specifications for further information.

FIBERLIGN Repair Rods

Catalog Number	Cable Diameter		Rod Length		Rods per Set	Subsets	Color Code
	in	mm	in	m			
3600100	0.354 – 0.385	8.9 – 9.7	45	1.14	9	3-3-3	Red
3600101	0.386 – 0.422	9.8 – 10.7	48	1.22	9	3-3-3	Black
3600102	0.423 – 0.460	10.8 – 11.6	50	1.27	10	3-3-4	Orange
3600103	0.461 – 0.505	11.7 – 12.8	54	1.37	11	3-4-4	Green
3600104	0.506 – 0.550	12.9 – 13.9	61	1.55	10	3-3-4	Blue
3600105	0.551 – 0.602	14.0 – 15.2	65	1.65	10	3-3-4	Yellow
3600106	0.603 – 0.660	15.3 – 16.7	70	1.78	11	3-4-4	Brown
3600107	0.661 – 0.719	16.8 – 18.2	74	1.88	12	4-4-4	Purple
3600108	0.720 – 0.785	18.3 – 19.9	80	2.03	13	3-3-3-4	Pink
3600109	0.786 – 0.850	20.0 – 21.5	86	2.18	12	4-4-4	Red
3600110	0.851 – 0.933	21.6 – 23.6	94	2.39	12	4-4-4	Black
3600111	0.934 – 1.020	23.7 – 25.9	102	2.59	13	3-3-3-4	Orange

Repair Rods Installed on OPGW

PRODUCTS AVAILABLE FOR SUBSTATION OR CENTRAL OFFICE DEMARCATION

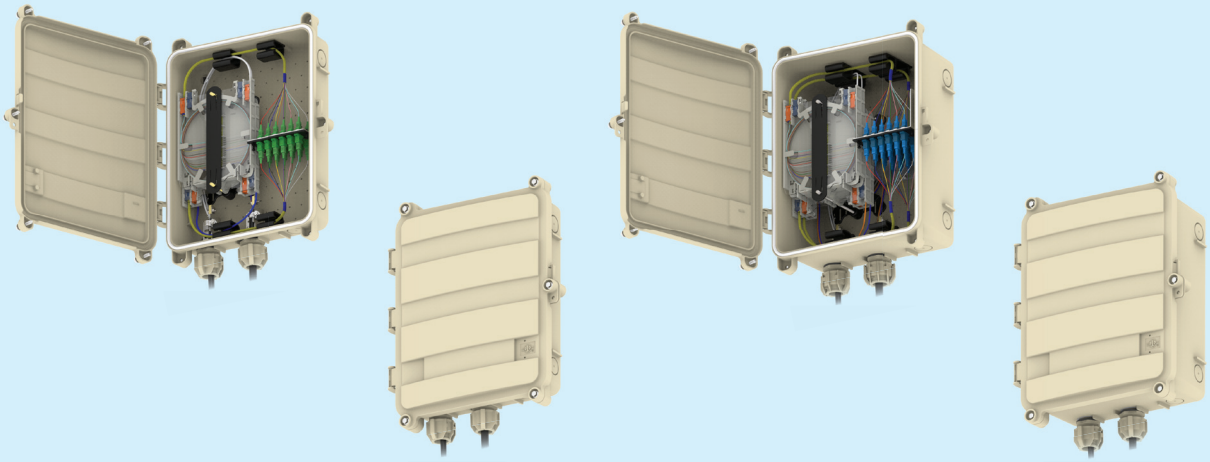

COYOTE® MPC

The **COYOTE® MPC (Multi-Purpose Closure)** is constructed of durable, UV-stabilized, flame-retardant polymer to permit interior or exterior applications. Eight cable entrance ports around the exterior accept an easy-to-use grommet system and standard commercially available fittings. The closure's interior can be configured to address slack storage, splicing, cross-connect, hardened adapter applications, or any combination. Pre-terminated configurations are also available to minimize the amount of labor required during installation. For more information about the COYOTE MPC, refer to the **PLP COYOTE® Fiber Optic Solutions Catalog.**

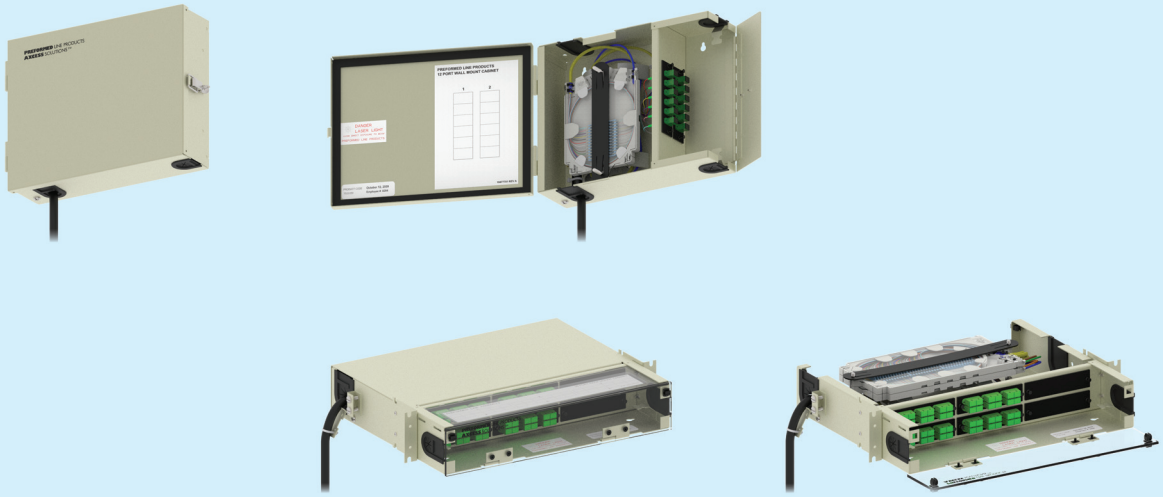

COYOTE® AXCESS SOLUTIONS™ CABINETS

COYOTE Axcess Solutions Cabinets are pre-assembled to your exact specifications to begin splicing right out of the carton, providing a substantial labor savings. Each cabinet is made from rugged 16 gauge steel and has a durable powder-coat finish that comes in almond or black. High-density splicing and patching can be achieved in one cabinet with the craft-friendly COYOTE splice trays and integrated fiber storage. Cabinets can be ordered with adapter modules (UPC or APC) and color coded pigtails to match your application. All multi-mode fiber grades are available. For more information about COYOTE Axcess Solutions Cabinets refer to the **PLP COYOTE® Fiber Optic Solutions Catalog.**

INDEX

Catalog Number	Page
00065474	11, 17, 19
00066114	11, 19
00070052	43
00070056	43
00070059	43
00070061	43
00070088	43
00070107	43
00070108	43
00070109	43
00070110	43
00070111	43
00070112	43
00070113	120, 118
00070125	120, 118
00070126	120, 118
00070127	120, 118
00070128	120, 118
00070129	120, 118
00070130	120, 118
00070131	120, 118
00070132	120, 118
00070133	120, 118
00070134	120, 118
00070135	120, 118
00070136	120, 118
00070137	120, 118
00070138	43
00070147	43
00070154	39
00070176	39
00070177	39
00070178	39
00070179	39
00070180	39
00070181	39
00070182	39
00070183	39
00070184	39
00070186	39
00070188	39
00070190	39
00070192	39
00070194	39
00070195	39
00070216	39
00070217	39
00070218	39
00070219	39
00070220	39
00070221	39
00070222	39
00070223	39
00070224	120, 118
00070225	120, 118
00070236	120, 118
00070237	120, 118
00070238	120, 118
00070239	120, 118
00070241	39
00070250	39
00070251	13
00070253	39
00070255	39
00070256	39
00070257	39
00070258	47, 52, 120, 118
00070446	47, 52, 118
00070447	47, 52, 118
00070448	47, 52, 118
00070449	47, 52, 118
00070450	47, 52, 118
00070451	47, 52, 118
00070452	47, 52, 118
00070453	53
00070454	47, 52, 118
00070454A	53
00070455	47, 52, 118
00070455A	53
00070456	47, 52, 118
00070456A	53
00070457	47, 52, 118
00070457A	53
00070458	47, 52, 118
00070458A	53
00070459	80, 86, 92
00070459A	80, 86, 92
1000172	80, 86, 92
1000173	80, 86, 92
1000174	80, 86, 92
1000175	80, 86, 92
1000176	80, 86, 92
1000177	80, 86, 92
1000178	26
1000179	26
2872000	26
2872001	26
2872001C1E1B1	26
2872002	26
2872003	26
2872004	26
2872005	26
2872006	26
2872007	26
2872008	26
2872009	26
2872010	26
2872011	26
2872012	26
2872013	26
2872014	26
2872015	26
2872016	26
2872017	26
2872018	27
2872019	27
2872099	27
2872100	27
2872100C1E1B1	27
2872101	27

SECTION 7
INDEX

FIBERLIGN® OPGW HARDWARE

INDEX

Catalog Number	Page
2801300	15
2801301	15
2801302	15
2801303	15
2801304	15
2801304S2	15
2801305	15
2801306	15
2801307	15
2801308	15
2801309	15
2801310	15
2801311	15
2801312	15
2801313	15
2801314	15
2801315	15
2801316	15
2801317	15
2801318	15
2801319	15
2801320	15
2801321	15
2801322	15
2801323	15
2801324	15
2801325	15
2801326	15
2801327	15
2801328	15
2801329	15
2801330	15
2801331	15
2801332	15
2890001C4E2	19
2890002C4E2	19
2890003C4E2	19
2890004C4E2	19
2890005C4E2	19
2890006C4E2	19
2890007C4E2	19
2890008C4E2	19
2890009C4E2	19
2890020C4E2	19
3600100	103
3600101	103
3600102	103
3600103	103
3600104	103
3600105	103
3600106	103
3600107	103

Catalog Number	Page
3600108	103
3600109	103
3600110	103
3600111	103
4300100	31
4300101	31
4300102	31
4300103	31
4300104	31
4300105	31
4300106	31
4300107	31
4300108	31
4300109	31
4300110	31
4300111	31
4300112	31
4300113	31
4300114	31
4300116	31
4300117	31
4300118	31
4300119	31
4300120	31
4300121	31
4300122	31
4300123	31
4300124	31
4300125	31
4300126	31
4300127	31
4300128	31
4300129	31
4300153	31
4300154	31
4300155	31
4300200	31
4300201	31
4300202	31
4300203	31
4300204	31
4300205	31
4300206	31
4300207	31
4300208	31
4300209	31
4300210	31
4300211	31
4300212	31
4300213	31
4300214	31
4300216	31

Catalog Number	Page
4300217	31
4300218	31
4300219	31
4300220	31
4300221	31
4300222	31
4300223	31
4300224	31
4300225	31
4300226	31
4300227	31
4300228	31
4300229	31
4300253	31
4300254	31
4300255	31
4400099	47
4400100	47
4400101	47
4400102	47
4400103	47
4400104	47
4400105	47
4400106	47
4400107	47
4400108	47
4400109	47
4400110	47
4400111	47
4400112	47
4400113	47
4400114	47
4400116	47
4400117	47
4400118	47
4400119	47
4400120	47
4400121	47
4400122	47
4400123	47
4400124	47
4400125	47
4400126	47
4400127	47
4400128	47
4400129	47
4400130	47
4700100	37
4700101	37
4700102	37
4700103	37
4700104	37

Catalog Number	Page
4700105	37
4700106	37
4700107	37
4700108	37
4700109	37
4700110	37
4700111	37
4700112	37
4700113	37
4700114	37
4700115	37
4700116	37
4700117	37
4700118	37
4700119	37
4700120	37
4700121	37
4700122	37
4700123	37
4700200	37
4700201	37
4700202	37
4700203	37
4700204	37
4700205	37
4700206	37
4700207	37
4700208	37
4700209	37
4700210	37
4700211	37
4700212	37
4700213	37
4700214	37
4700215	37
4700216	37
4700217	37
4700218	37
4700219	37
4700220	37
4700221	37
4700222	37
4700223	37
4700300	43
4700301	43
4700302	43
4700303	43
4700304	43
4700305	43
4700306	43
4700307	43
4700308	43

Catalog Number	Page
4700309	43
4700310	43
4700311	43
4700312	43
4700313	43
4700314	43
4700315	43
4700316	43
4700317	43
4700318	43
4700319	43
5050104	51
5050105	51
5050106	51
5058100	57
5058101	57
5058102	57
5058103	57
5058104	57
5058105	57
5058106	57
5058107	57
7000401	92
7000402	92
8000428	79
8000432	79
8000454	79
8000455	79
8003041	93
8003042	93
8003043	93
8003044	93
8003052	93
8003175	79
8003256	93
8003257	93
8003266	93
8003267	93
8003268	93
8003269	93
8003270	93
8003271	93
8003280	68, 74
8003379	93
8003411	79
8003421	79
8003422	79
8003472	63, 79
8003477	93
8003491	79, 81
8003493	61
8003493B1	61

Catalog Number	Page
8003503	61
8003503B1	61
8003503LTC1	61
8003509	68
8003512	74, 81
8003569	61, 79, 81
8003644	93
8003653	93
8003654	93
8003663	67, 73
8003664	67, 73
8003691	67, 73
8003692	67, 73
8003693	67, 73
8003694	67, 73
8003806	93
8004065	67, 73
8004095	74
8004151	67, 73
8006654	77, 79
80061194	68, 83
80061195	63, 68, 74, 79, 81, 83
80804986	79
80805293	68, 74
80805514	65, 66, 67, 73, 77, 78
80805937	79
80806033	65, 66, 67, 73
80808187	74
80808945	67, 73
80809958	67, 71, 72, 73
80810086	67, 73, 78
80811010	68
80812321	68
80812335	63, 68
80813152	67, 73
80813345	79
80813629	74
80813862	74
80813941	63, 74
80851659	79
280110266	15
710010015	19, 30, 46, 99
710010016	14, 36, 42, 99
710010017	91
710010293	19, 30, 46, 99
710010294	14, 36, 42, 99
710010527	99
710010576	91
710010658	99
710010882	99
710011205	14, 19, 30, 36, 42, 46, 99
710011655	91

Catalog Number	Page
710012417	19
710015838	92
710016012	88
710016012L1	88
710016012L2	88
710016013	89
710016013L1	89
710016013L2	89
710016015	87
710016015L1	87
710016015L2	87
710016505	92
710016687	99
710016706	99
710016902	99
710016903	99
710016994	99
710016995	99
710016996	99
710016997	99
710017294	99
710017295	99
800011212	68, 74
800011381	68, 74
800011382	68, 74
800011563	68, 74
A	
AS-5L	13, 14, 17, 18, 19, 27, 30, 33, 36, 39, 42
C	
CE-5105	29
CE-5259	29
CE-5261	29, 33, 35, 36, 39, 41, 42
CE-5261BNK	42
COYW617P001	65, 69
COYW617S001	65, 69
COYW622P001	65, 69
COYW622S001	65, 69
COYW919P001	71, 75
COYW919S001	71, 75
COYW928P001	71, 75
COYW928S001	71, 75
G	
GC-H6	97
L	
LCE-66-14	17, 18, 19
LGSTS72	67, 71, 72, 73, 78

Catalog Number	Page
LTC-1	68, 74, 79, 81, 83, 92
LTC-2	19, 92
O	
OTD-A-724	101
P	
PR-0135	55
PR-0137	55
PR-0139	55
PR-0141	55
PR-0142	55
PR-0144	55
PR-0146	55
PR-0148	55
PR-0150	55
PR-0151	55
PR-0152	55
PR-0154	55
PR-0155	55
PR-0156	55
PR-0158	55
T	
TC-6F	17, 18
V	
VSD-2016	54
VSD-2020	54
VSD-2025	54
VSD-2032	54
VSD-2040	54
VSD-2050	54
VSD-2520	54
VSD-2525	54
VSD-2532	54
VSD-2540	54
VSD-3525	54
VSD-3532	54
VSD-3540	54
VSD-3550	54
Y	
YC-5206	29
YC-5207	29, 35, 36, 41, 42
YC-5209	29
YP-5908	30, 39, 42
YP-5909	30, 33, 36
YP-5910	30
YP-5911	30
YP-5912	30

NOTES:

NOTES:

GLOBAL HEADQUARTERS
660 BETA DRIVE
CLEVELAND, OHIO 44143

+1 440 461 5200
INFO@PLP.COM
PLP.COM

© 2026 Preformed Line Products
Printed in U.S.A.
CO-CA-1024-4
04.26.1.5C