PRODUCT CATALOG

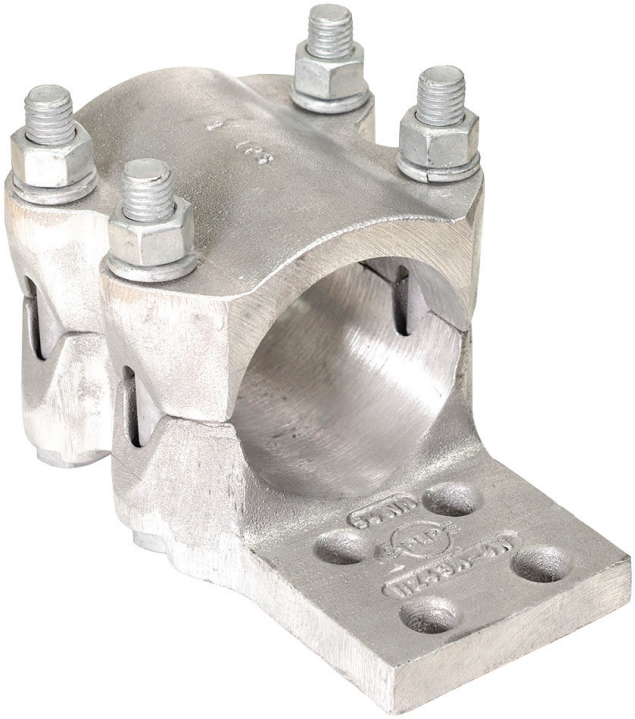

SUBSTATION CONNECTORS

230 kV and Below

ABOUT PLP

PLP protects the world's most critical connections by creating stronger and more reliable networks. Our precision-engineered solutions are trusted by energy and communications providers to perform better and last longer. PLP, a recognized world leader in conductor protection and support, began operations in 1947 with the introduction of the Armor Rod, an innovative helical product that fundamentally changed the electric utility industry. Since then, PLP has continued to introduce innovative products, like the ARMOR-GRIP® Suspension, which to this day still provides the best protection against static and dynamic stresses at the conductor's support point. With offices manufacturing facilities in over 20 countries, PLP now works as a united global corporation, delivering high-quality products and unparalleled service to customers around the world.

ENGINEERING & DESIGN

Since 1947, PLP has been an industry leader in designing high-quality, field-proven solutions for the electric power industry. Substation systems worldwide rely on PLP connectors, spacers, expansion connectors, string hardware, and many other critical components when solutions that perform better and last longer are essential.

The strength, durability, and longevity of PLP products begins with our dedicated engineering teams. PLP engineers utilize our 70+ years of industry experience, the latest design software, and cutting-edge engineering techniques to help ensure our products live up to the PLP name.

TESTING & QUALITY CONTROL

Product testing has been at the forefront of PLP's culture since the company began in 1947. Testing of all products is performed at the time of design and throughout the manufacturing process as part of our sample testing program for utility capital projects. For Substations, PLP follows the ANSI NEMA CC-1 Standard for the Testing of Electric Power Connection.

PLP's state-of-the-art lab in Cleveland is one of the largest facilities dedicated to testing the strength and endurance of power utility hardware. 50,000-pound and 450,000-pound tensile machines at the lab allow us to test the strength and durability of fittings prior to delivery to the customer. Heat Cycle and Temperature Rise testing can be conducted here and at many of PLP laboratories globally. While competitors have reduced or eliminated their testing labs and programs, PLP has expanded its lab by 50 percent making it a 23,000 square foot facility.

SUBSTATION CONNECTORS

PLP **Substation Connectors** for 230 kV and below include a full range of product solutions for bolted, compression and weldment applications. Each connector is designed and tested to strict industry standards to ensure the optimal performance in the field. All components arrive at the job site in project-specific packaging to help expedite identification and installation.

FEATURES AND BENEFITS

- Standard connectors rated up to 230 kV
- Tin plating of connectors and various hardware materials available by special request
- Custom design solutions available to secure your most challenging/unique connections
- Global technical and manufacturing resources with decades of experience to provide immediate assistance

IMPORTANT NOTES
SUBSTATION CONNECTORS

1. Standard catalog numbers are provided. Specific designs and part numbers can be configured per customer specifications. Please contact PLP Technical Support for project-specific part numbers.

2. All galvanizing has been performed per ASTM A153. All tin plating has been performed per ASTM B545.

3. Corona rings/bells/caps, when required, are packaged separately to avoid damage.

4. Please see the individual component drawings for detailed dimensions and material properties of parts.

5. Store connectors dry and clean before installation.

6. The reliability and low resistance of any electrical contact depends strongly on the preparation and installation accuracy. Please reference the Substation Connector Application Procedure (SP3685) for the proper installation instructions.

7. Standard connectors are not designed for reinstallation or reopening.

CONTENTS

SUBSTATION CONNECTORS

SECTION 1 – TERMINALS

Aluminum Bolted

HZ-A, Tube to Pad 13
HZR-A, Cable to Pad 15
H2ZR-A, Two Cable to Pad 17

Bronze Bolted

AZ, Cable to One Hole Pad, Single U-Bolt 18
AAZ, Cable to Pad, Double U-Bolt 19
CZ, Cable to Pad, Single Eyebolt 20
CCZ, Cable to Pad, Double Eyebolt 22
C2Z, Two Cable to Pad, Eyebolt 24
C3Z, Three Cable to Pad, Eyebolt 25
LZ, Cable to One-Hole Pad, Set Screw 26
HZ, Tube to Pad 27
HZR, Cable to Pad 28

Aluminum Compression

XZF-R, Cable to Pad 30
ZTC, Cable to Pad 32

SECTION 2 – COUPLERS

Aluminum Bolted

HE-A, Straight Tube to Tube 37
HL-A, 90-Degree Tube to Tube 38
HL-A, 90-Degree Cable to Cable 39
HHE-A, Straight Tube to Tube Reducer 40
HHE-A, Straight Tube to Cable 41
EHHE-A, Straight Cable to Cable 42

Aluminum Compression

ERC, Straight Cable to Cable 43

Bronze Bolted

CE, Straight Cable to Cable, Eyebolt 44
HE, Straight Tube to Tube 45
HE, Straight Tube to Cable 46
HE, Straight Cable to Cable 47

SECTION 3 – TEES

Aluminum Bolted

HB-A, Tube to Pad 51
HBR-A, Cable to Pad 53
HHTR-A, Tube Main to Cable Tap 54
HHTR-A, Cable Main to Cable Tap 57
HHT-A, Tube Main to Tube Tap 59

Bronze Bolted

AT/ATT, Cable Main to Cable Tap, U-Bolt 62
CT, Cable Main to Cable Tap, Compact 63
CB, Cable to Pad, Eyebolt 64
HB, Tube to Pad 65
HBR, Cable to Pad 67
HATT, Tube Main to Cable Tap, U-Bolt 68
HT, Tube Main to Tube Tap 70
HT, Cable Main to Cable Tap 72
HT, Tube Main to Cable Tap 74

Aluminum Compression

CCDT, Cable to Cable 76
CCDTN4, Cable to Pad 77

SECTION 4 – PARALLEL CONNECTORS

Aluminum Bolted

EGP-A, Two Cable 81
MP-R, Two Cable, U-Bolt 82

SECTION 5 – STUD CONNECTORS

Aluminum Bolted

HP-A, Stud to Tube 85
HPR-A, Stud to Cable 87

Bronze Bolted

HP, Stud to Tube 90
HPR, Stud to Cable 92

SECTION 6 – BUS SUPPORTS

Aluminum Bolted

FSD-A, Tube to Insulator, Double Support 97
SHG, Cable to Insulator 99

Bronze Bolted

SF, Tube to Insulator 100
SD, Tube to Insulator 101

SECTION 7 – SPACERS

Aluminum Bolted

ES-A, Two Cables 105

SECTION 8 – EXPANSION CONNECTORS

Aluminum Bolted

FE-A, Tube to Tube with Guide 109
FES-A Tube to Insulator 110
FP-A, Stud to Tube with Guide 111
FZ-A, Tube to Pad with Guide 112

Bronze Bolted

FE, Tube to Tube with Guide 114
FP, Stud to Tube with Guide 115
FZ, Tube to Pad with Guide 116

SECTION 9 – CAPS

Aluminum

TA-A, Internal Press Fit 121

Bronze

TA, Internal Press Fit 122

SECTION 10 – GROUNDING CONNECTORS

Bronze Bolted

TC, Two Cable Cross 125
TD, Two Cables to Flat, Double Body 126
TDH, Two Cables to Tube, 90-Degrees 127
TDV, Two Cables to Tube, Parallel 128
TE, One Cable to Flat, Double Body 129
TG, Braid to Tube 130
TR, One Cable to Tube, 90-Degrees or Parallel 131
TSE, One Cable to Flat, Single Body 132
TT, Three Cables to Tube, Parallel 133

SECTION 11 – APPENDIX & INDEX

Order Options Suffix List 136
PLP Electrical Joint Compound 137
Conductor Size Tables - ACSR 138
Conductor Size Tables - AAC 141
Nominal Pipe Size (NPS) Information 143
Torque Tables 145
Index 146

SALES CONTACTS AND CUSTOMER SUPPORT 147

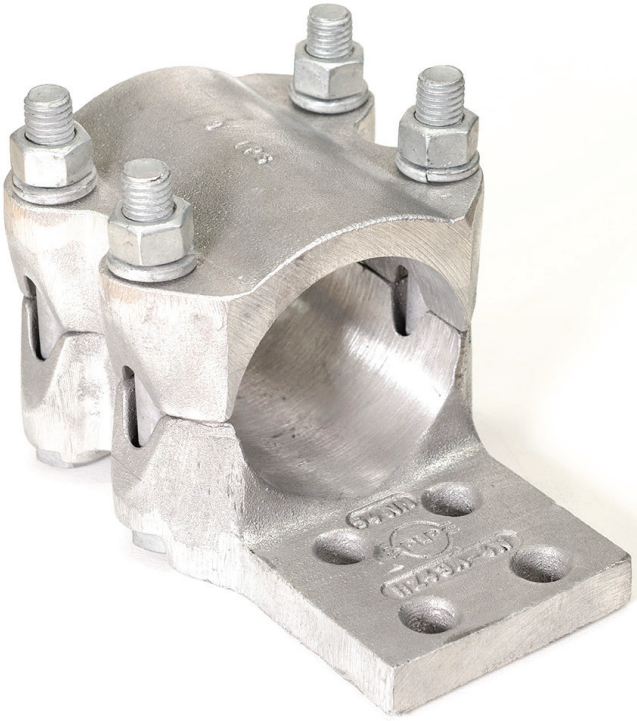

SECTION 1

TERMINALS

SUBSTATION CONNECTORS - 230KV AND BELOW

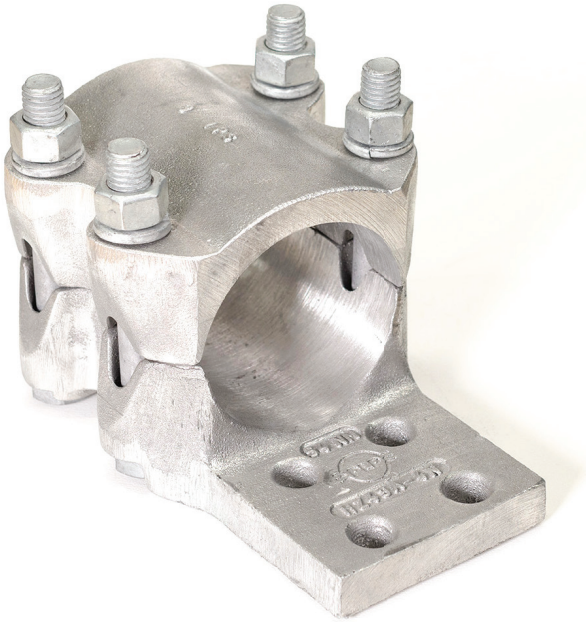

TERMINALS

PLP **Substation Terminals** for 230kV and below are designed to connect a bus tube or stranded conductor to a terminal pad connection on primary substation equipment. All contact faces are manufactured to maximize contact surface area and provide a superior installed fit.

FEATURES AND BENEFITS

- Complete range of sizes for connecting most standard bus tube or stranded conductor to a terminal pad
- Terminal pad dimensions comply to ANSI/NEMA CC-1 standard
- Solutions for bolted, compression, and weldment applications
- Available in aluminum and bronze, with tin plating capabilities for both materials
- Custom design solutions available to secure your most challenging connections

HZ-A

Aluminum Bolted Terminal Tube to Pad 230kV and Below

Aluminum alloy terminal to connect tube in the main to a flat pad surface. Electrical joint compound is recommended for all tube/flat contact surfaces.

CASTINGS: Aluminum Alloy

HARDWARE: Galvanized Steel

See page 136 for special order options such as tin plating, hardware materials and specific angles. Contact PLP for further details, unlisted option and/or special applications.

Example: HZ37A-2N with Stainless Steel Hardware would be HZ37A-2N-SS.

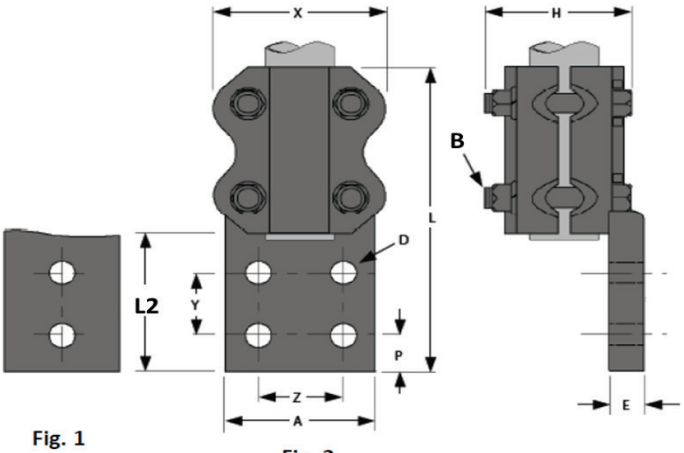

Fig. 1 Fig. 2

Part Number	Figure	NPS Tube Diameter	Dimensions in (mm)									
		in (mm)	A	D	E	H	L	L2	P	B	X	Y/Z
HZ37A-2N	1	3/4 (19)	1.61 (41)	0.56 (14)	0.39 (10)	3.11 (79)	6.50 (165)	3.00 (76)	0.63 (16)	1/2 (13)	2.80 (71)	1.75 (44)
HZ37A-4N	2	3/4 (19)	3.00 (76)	0.56 (14)	0.39 (10)	3.11 (79)	6.50 (165)	3.00 (76)	0.63 (16)	1/2 (13)	2.80 (71)	1.75 (44)
HZ38A-2N	1	1 (25)	1.89 (48)	0.56 (14)	0.51 (13)	3.43 (87)	6.81 (173)	3.00 (76)	0.63 (16)	1/2 (13)	3.07 (78)	1.75 (44)
HZ38A-4N	2	1 (25)	3.00 (76)	0.56 (14)	0.51 (13)	3.43 (87)	6.81 (173)	3.00 (76)	0.63 (16)	1/2 (13)	3.07 (78)	1.75 (44)
HZ39A-2N	1	1-1/4 (32)	2.24 (57)	0.56 (14)	0.51 (13)	2.87 (73)	7.01 (178)	3.00 (76)	0.63 (16)	1/2 (13)	3.35 (85)	1.75 (44)
HZ39A-4N	2	1-1/4 (32)	3.00 (76)	0.56 (14)	0.51 (13)	2.87 (73)	7.01 (178)	3.00 (76)	0.63 (16)	1/2 (13)	3.35 (85)	1.75 (44)
HZ40A-2N	1	1-1/2 (38)	2.52 (64)	0.56 (14)	0.51 (13)	3.90 (99)	7.52 (191)	3.00 (76)	0.63 (16)	1/2 (13)	3.82 (97)	1.75 (44)
HZ40A-4N	2	1-1/2 (38)	3.00 (76)	0.56 (14)	0.51 (13)	3.90 (99)	7.52 (191)	3.00 (76)	0.63 (16)	1/2 (13)	3.82 (97)	1.75 (44)
HZ40A-4N4	2	1-1/2 (38)	4.00 (102)	0.56 (14)	0.51 (13)	3.90 (99)	8.70 (221)	4.00 (102)	1.13 (29)	1/2 (13)	3.82 (97)	1.75 (44)
HZ41A-2N	1	2 (51)	2.76 (70)	0.56 (14)	0.51 (13)	4.45 (113)	7.76 (197)	3.00 (76)	0.63 (16)	5/8 (16)	4.61 (117)	1.75 (44)
HZ41A-4N	2	2 (51)	3.11 (79)	0.56 (14)	0.71 (18)	4.45 (113)	7.76 (197)	3.00 (76)	0.63 (16)	5/8 (16)	4.61 (117)	1.75 (44)
HZ41A-4N4	2	2 (51)	4.00 (102)	0.56 (14)	0.71 (18)	4.45 (113)	8.46 (215)	4.00 (102)	1.13 (29)	5/8 (16)	4.61 (117)	1.75 (44)
HZ42A-2N	1	2-1/2 (64)	3.00 (76)	0.56 (14)	0.71 (18)	4.96 (126)	7.76 (197)	3.00 (76)	0.63 (16)	5/8 (16)	4.92 (125)	1.75 (44)
HZ42A-4N	2	2-1/2 (64)	3.74 (95)	0.56 (14)	0.71 (18)	4.96 (126)	7.76 (197)	3.00 (76)	0.63 (16)	5/8 (16)	4.92 (125)	1.75 (44)
HZ42A-4N4	2	2-1/2 (64)	4.00 (102)	0.56 (14)	0.71 (18)	4.96 (126)	8.78 (223)	4.00 (102)	1.13 (29)	5/8 (16)	4.92 (125)	1.75 (44)
HZ43A-2N	1	3 (76)	3.74 (95)	0.56 (14)	0.71 (18)	5.43 (138)	8.11 (206)	3.00 (76)	0.63 (16)	5/8 (16)	5.51 (140)	1.75 (44)
HZ43A-4N	2	3 (76)	3.74 (95)	0.56 (14)	0.71 (18)	5.43 (138)	8.11 (206)	3.00 (76)	0.63 (16)	5/8 (16)	5.51 (140)	1.75 (44)

HZ-A CONTINUED

Aluminum Bolted Terminal
Tube to Pad
230kV and Below

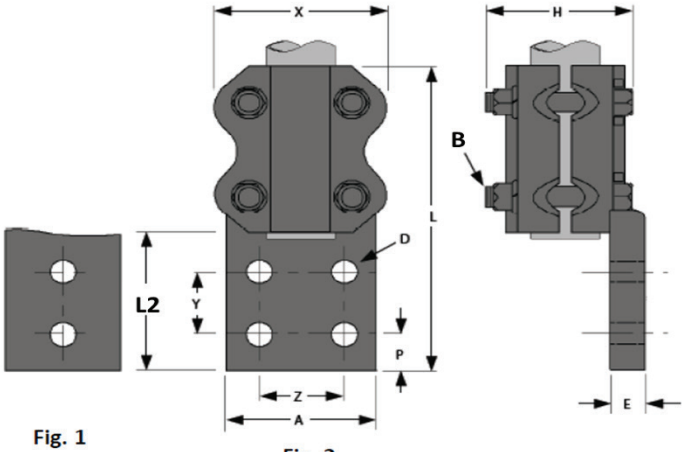

Fig. 1

Fig. 2

Part Number	Figure	NPS Tube Diameter	Dimensions in (mm)									
		in (mm)	A	D	E	H	L	L2	P	B	X	Y/Z
HZ43A-4N4	2	3 (76)	4.00 (102)	0.56 (14)	0.71 (18)	5.43 (138)	9.25 (235)	4.00 (102)	1.13 (29)	5/8 (16)	5.51 (140)	1.75 (44)
HZ44A-2N	1	3-1/2 (89)	3.74 (95)	0.56 (14)	0.71 (18)	5.43 (138)	8.74 (222)	3.00 (76)	0.63 (16)	5/8 (16)	6.14 (156)	1.75 (44)
HZ44A-2N4	1	3-1/2 (89)	4.00 (102)	0.56 (14)	0.71 (18)	5.43 (138)	9.76 (248)	4.00 (102)	1.13 (29)	5/8 (16)	6.14 (156)	1.75 (44)
HZ44A-4N	2	3-1/2 (89)	3.74 (95)	0.56 (14)	0.71 (18)	5.43 (138)	8.74 (222)	3.00 (76)	0.63 (16)	5/8 (16)	6.14 (156)	1.75 (44)
HZ44A-4N4	2	3-1/2 (89)	4.00 (102)	0.56 (14)	0.75 (19)	5.43 (138)	9.76 (248)	4.00 (102)	1.13 (29)	5/8 (16)	6.14 (156)	1.75 (44)
HZ45A-2N	1	4 (102)	3.74 (95)	0.56 (14)	0.75 (19)	5.94 (151)	9.57 (243)	3.00 (76)	0.63 (16)	5/8 (16)	6.61 (168)	1.75 (44)
HZ45A-4N	2	4 (102)	3.74 (95)	0.56 (14)	0.75 (19)	5.94 (151)	9.57 (243)	3.00 (76)	0.63 (16)	5/8 (16)	6.61 (168)	1.75 (44)
HZ45A-4N4	2	4 (102)	4.00 (102)	0.56 (14)	0.75 (19)	5.94 (151)	10.55 (268)	4.00 (102)	1.13 (29)	5/8 (16)	6.61 (168)	1.75 (44)
HZ47A-4N	2	5 (127)	6.50 (165)	0.56 (14)	0.83 (21)	7.24 (184)	10.51 (267)	3.00 (76)	0.63 (16)	5/8 (16)	7.76 (197)	1.75 (44)
HZ47A-4N4	2	5 (127)	6.50 (165)	0.56 (14)	0.83 (21)	7.24 (184)	11.50 (292)	4.00 (102)	1.13 (29)	5/8 (16)	7.76 (197)	1.75 (44)
HZ49A-4N4	2	6 (152)	7.64 (194)	0.56 (14)	1.00 (25)	8.58 (218)	12.52 (318)	4.00 (102)	1.13 (29)	5/8 (16)	8.78 (223)	1.75 (44)

HZR-A

Aluminum Bolted Terminal Cable to Pad 230kV and Below

Aluminum alloy terminal to connect cable in the main to a flat pad surface. Electrical joint compound is recommended for all cable/flat contact surfaces.

CASTINGS: Aluminum Alloy

HARDWARE: Galvanized Steel

See page 136 for special order options such as tin plating, hardware materials and specific angles. Contact PLP for further details, unlisted option and/or special applications.

Example: HZR14A-2N with Stainless Steel Hardware would be HZR14A-2N-SS.

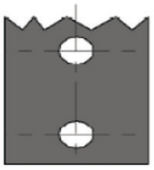

Fig. 1

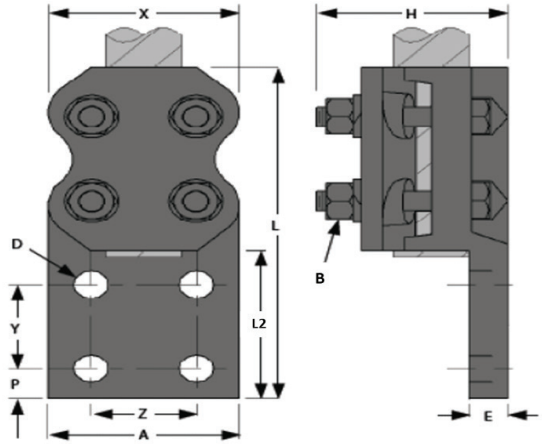

Fig. 2

Part Number	Figure	AAC	AAC Diameter in (mm)	ACSR	ACSR Diameter in (mm)	Dimensions in (mm) A	D	E	H	L	L2	P	B	X	Y/Z
HZR14A-2N	1	1/0T-250(*)	0.372 - 0.575 (9.4 - 14.6)	1/0 (6/1) - 4/0 (6/1)	0.398 - .563 (10.1 - 14.3)	1.65 (42)	0.56 (14)	0.35 (9)	2.28 (58)	5.91 (150)	3.00 (76)	0.63 (16)	1/2 (13)	2.48 (63)	1.75 (44)
HZR14A-M2	1	1/0T-250(*)	0.372 - 0.575 (9.4 - 14.6)	1/0 (6/1) - 4/0 (6/1)	0.398 - .563 (10.1 - 14.3)	1.57 (40)	0.63 (16)	0.35 (9)	2.28 (58)	5.91 (150)	3.00 (76)	0.63 (16)	1/2 (13)	2.80 (71)	1.75 (44)
HZR14A-M4	1	1/0T-250(*)	0.372 - 0.575 (9.4 - 14.6)	1/0 (6/1) - 4/0 (6/1)	0.398 - .563 (10.1 - 14.3)	1.57 (40)	0.56 (14)	0.35 (9)	2.28 (58)	5.91 (150)	3.00 (76)	0.71 (18)	1/2 (13)	2.48 (63)	1.75 (44)
HZR14A-4N	2	1/0T-250(*)	0.372 - 0.575 (9.4 - 14.6)	1/0 (6/1) - 4/0 (6/1)	0.398 - .563 (10.1 - 14.3)	3.00 (76)	0.56 (14)	0.35 (9)	2.28 (58)	5.91 (150)	3.00 (76)	0.63 (16)	1/2 (13)	2.48 (63)	1.75 (44)
HZR14A-4N4	2	1/0T-250(*)	0.372 - 0.575 (9.4 - 14.6)	1/0 (6/1) - 4/0 (6/1)	0.398 - .563 (10.1 - 14.3)	4.00 (102)	0.56 (14)	0.35 (9)	2.28 (58)	6.89 (175)	4.00 (102)	1.14 (29)	1/2 (13)	2.48 (63)	1.75 (44)
HZR14A-4N4-M1	2	1/0T-250(*)	0.372 - 0.575 (9.4 - 14.6)	1/0 (6/1) - 4/0 (6/1)	0.398 - .563 (10.1 - 14.3)	4.00 (102)	0.56 (14)	0.79 (20)	2.28 (58)	6.89 (175)	4.00 (102)	1.14 (29)	1/2 (13)	2.48 (63)	1.75 (44)
HZR17A-2N	1	250-400	0.575 - 0.728 (14.6 - 18.5)	4/0 (6/1) - 397 (26/7)	0.563 - .783 (14.3 - 19.9)	1.77 (45)	0.56 (14)	0.43 (11)	2.80 (71)	6.30 (160)	3.00 (76)	0.63 (16)	1/2 (13)	2.64 (67)	1.75 (44)
HZR17A-4N	2	250-400	0.575 - 0.728 (14.6 - 18.5)	4/0 (6/1) - 397 (26/7)	0.563 - .783 (14.3 - 19.9)	3.00 (76)	0.56 (14)	0.43 (11)	2.80 (71)	6.30 (160)	3.00 (76)	0.63 (16)	1/2 (13)	2.64 (67)	1.75 (44)
HZR17A-4N4	2	250-400	0.575 - 0.728 (14.6 - 18.5)	4/0 (6/1) - 397 (26/7)	.563 - .783 (14.3 - 19.9)	4.00 (102)	0.56 (14)	0.43 (11)	2.80 (71)	7.28 (185)	4.00 (102)	1.14 (29)	1/2 (13)	2.64 (67)	1.75 (44)
HZR17A-4M	2	250-400	0.575 - 0.728 (14.6 - 18.5)	4/0 (6/1) - 397 (26/7)	.563 - .783 (14.3 - 19.9)	4.00 (102)	0.56 (14)	0.43 (11)	2.80 (71)	7.28 (185)	4.00 (102)	0.98 (25)	1/2 (13)	2.64 (67)	1.75 (44)
HZR21A-2N	1	350-600	0.681 - 0.893 (17.3 - 22.7)	336 (18/1) - 477 (30/7)	.684 - .883 (17.4 - 22.4)	1.77 (45)	0.56 (14)	0.43 (11)	2.80 (71)	6.42 (163)	3.00 (76)	0.63 (16)	1/2 (13)	2.76 (70)	1.75 (44)
HZR21A-M3	1	350-600	0.681 - .893 (17.3 - 22.7)	336 (18/1) - 477 (30/7)	.684 - .883 (17.4 - 22.4)	1.77 (45)	0.63 (16)	0.43 (11)	2.80 (71)	6.42 (163)	3.00 (76)	0.63 (16)	1/2 (13)	2.76 (70)	1.75 (44)
HZR21A-M6	1	350-600	0.681 - 0.893 (17.3 - 22.7)	336 (18/1) - 477 (30/7)	.684 - .883 (17.4 - 22.4)	1.57 (40)	0.56 (14)	0.43 (11)	2.80 (71)	6.57 (167)	3.15 (80)	0.79 (20)	1/2 (13)	2.76 (70)	1.26 (32)
HZR21A-M7	1	350-600	0.681 - 0.893 (17.3 - 22.7)	336 (18/1) - 477 (30/7)	.684 - .883 (17.4 - 22.4)	1.77 (45)	0.56 (14)	0.43 (11)	2.80 (71)	6.42 (163)	3.00 (76)	0.63 (16)	1/2 (13)	2.76 (70)	1.18 (30)
HZR21A-4N	2	350-600	0.681 - 0.893 (17.3 - 22.7)	336 (18/1) - 477 (30/7)	.684 - .883 (17.4 - 22.4)	3.00 (76)	0.56 (14)	0.43 (11)	2.80 (71)	6.42 (163)	3.00 (76)	0.63 (16)	1/2 (13)	2.76 (70)	1.75 (44)
HZR21A-4N4	2	350-600	0.681 - 0.893 (17.3 - 22.7)	336 (18/1) - 477 (30/7)	.684 - .883 (17.4 - 22.4)	4.00 (102)	0.56 (14)	0.43 (11)	2.80 (71)	7.40 (188)	4.00 (102)	1.14 (29)	1/2 (13)	2.76 (70)	1.75 (44)
HZR21A-4M	2	350-600	0.681 - 0.893 (17.3 - 22.7)	336 (18/1) - 477 (30/7)	.684 - .883 (17.4 - 22.4)	4.00 (102)	0.56 (14)	0.43 (11)	2.80 (71)	7.40 (188)	4.00 (102)	0.98 (25)	1/2 (13)	2.76 (70)	1.97 (50)
HZR21A-M1	2	350-600	0.681 - .893 (17.3 - 22.7)	336 (18/1) - 477 (30/7)	.684 - .883 (17.4 - 22.4)	4.00 (102)	0.56 (14)	0.43 (11)	2.80 (71)	7.40 (188)	4.00 (102)	1.14 (29)	1/2 (13)	2.76 (70)	1.75 (44)
HZR21A-M2	2	350-600	0.681 - .893 (17.3 - 22.7)	336 (18/1) - 477 (30/7)	.684 - .883 (17.4 - 22.4)	4.00 (102)	0.56 (14)	0.43 (11)	2.80 (71)	7.40 (188)	4.00 (102)	1.18 (30)	1/2 (13)	2.76 (70)	1.57 (40)
HZR21A-M5	2	350-600	0.681 - .893 (17.3 - 22.7)	336 (18/1) - 477 (30/7)	.684 - .883 (17.4 - 22.4)	4.00 (102)	0.56 (14)	0.43 (11)	2.80 (71)	7.40 (188)	4.00 (102)	1.02 (26)	1/2 (13)	2.76 (70)	1.85 (47)
HZR21A-M8	2	350-600	0.681 - .893 (17.3 - 22.7)	336 (18/1) - 477 (30/7)	.684 - .883 (17.4 - 22.4)	3.15 (80)	0.56 (14)	0.43 (11)	2.80 (71)	6.57 (167)	3.15 (80)	0.79 (20)	1/2 (13)	2.76 (70)	1.57 (40)
HZR27A-2N	1	600-900	0.893 - 1.094 (22.7 - 27.8)	477 (30/7) - 795 (54/7)	.883 - 1.093 (22.4 - 27.8)	2.00 (51)	0.56 (14)	0.51 (13)	3.15 (80)	6.73 (171)	3.00 (76)	0.63 (16)	1/2 (13)	3.00 (76)	1.75 (44)
HZR27A-4N	2	600-900	0.893 - 1.094 (22.7 - 27.8)	477 (30/7) - 795 (54/7)	.883 - 1.093 (22.4 - 27.8)	3.00 (76)	0.56 (14)	0.51 (13)	3.15 (80)	6.73 (171)	3.00 (76)	0.63 (16)	1/2 (13)	3.00 (76)	1.75 (44)

*S denotes SOLID wire, and T denotes STRANDED wire

HZR-A CONTINUED

Aluminum Bolted Terminal
Cable to Pad
230kV and Below

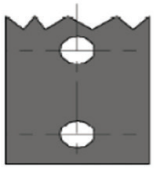

Fig. 1

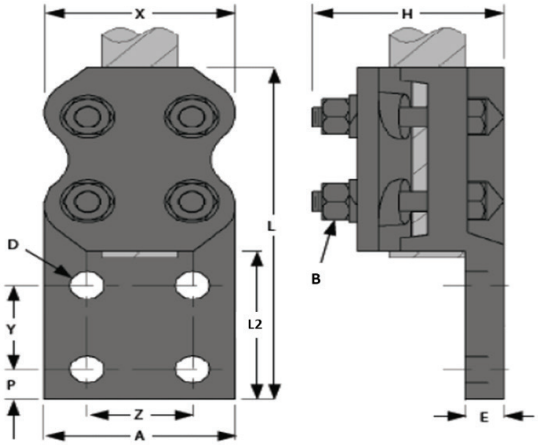

Fig. 2

Part Number	Figure	AAC	AAC Diameter in (mm)	ACSR	ACSR Diameter in (mm)	Dimensions in (mm) A	D	E	H	L	L2	P	B	X	Y/Z
HZR27A-4N4	2	600-900	0.893 - 1.094 (22.7 - 27.8)	477 (30/7) - 795 (54/7)	.883 - 1.093 (22.4 - 27.8)	4.00 (102)	0.56 (14)	0.51 (13)	3.15 (80)	7.91 (201)	4.00 (102)	1.14 (29)	1/2 (13)	3.00 (76)	1.75 (44)
HZR27A-4M	2	600-900	0.893 - 1.094 (22.7 - 27.8)	477 (30/7) - 795 (54/7)	.883 - 1.093 (22.4 - 27.8)	4.00 (102)	0.56 (14)	0.51 (13)	3.15 (80)	7.91 (201)	4.00 (102)	0.98 (25)	1/2 (13)	3.00 (76)	1.97 (50)
HZR29A-2N	1	900-1250	1.094 - 1.289 (27.8 - 32.7)	715 (30/19) - 1113 (54/19)	1.081 - 1.293 (27.5 - 32.8)	2.64 (67)	0.56 (14)	0.51 (13)	3.62 (92)	6.89 (175)	3.00 (76)	0.63 (16)	1/2 (13)	3.19 (81)	1.75 (44)
HZR29A-4N	2	900-1250	1.094 - 1.289 (27.8 - 32.7)	715 (30/19) - 1113 (54/19)	1.081 - 1.293 (27.5 - 32.8)	3.07 (78)	0.56 (14)	0.51 (13)	3.62 (92)	6.89 (175)	3.00 (76)	0.63 (16)	1/2 (13)	3.19 (81)	1.75 (44)
HZR29A-4N4	2	900-1250	1.094 - 1.289 (27.8 - 32.7)	715 (30/19) - 1113 (54/19)	1.081 - 1.293 (27.5 - 32.8)	4.00 (102)	0.56 (14)	0.51 (13)	3.62 (92)	8.19 (208)	4.00 (102)	1.14 (29)	1/2 (13)	3.19 (81)	1.75 (44)
HZR29A-4M	2	900-1250	1.094 - 1.289 (27.8 - 32.7)	715 (30/19) - 1113 (54/19)	1.081 - 1.293 (27.5 - 32.8)	4.00 (102)	0.56 (14)	0.51 (13)	3.62 (92)	8.19 (208)	4.00 (102)	0.98 (25)	1/2 (13)	3.19 (81)	1.97 (50)
HZR29A-M3	2	900-1250	1.094 - 1.289 (27.8 - 32.7)	715 (30/19) - 1113 (54/19)	1.081 - 1.293 (27.5 - 32.8)	4.92 (125)	0.56 (14)	0.63 (16)	3.62 (92)	9.09 (231)	4.92 (125)	1.18 (30)	1/2 (13)	3.19 (81)	1.75 (44)
HZR29A-M4	2	900-1250	1.094 - 1.289 (27.8 - 32.7)"	715 (30/19) - 1113 (54/19)	1.081 - 1.293 (27.5 - 32.8)	3.15 (80)	0.56 (14)	0.63 (16)	3.62 (92)	7.09 (180)	3.15 (80)	0.63 (16)	1/2 (13)	3.19 (81)	1.75 (44)
HZR29A-M5	2	900-1250	1.094 - 1.289 (27.8 - 32.7)"	715 (30/19) - 1113 (54/19)	1.081 - 1.293 (27.5 - 32.8)	3.15 (80)	0.56 (14)	0.63 (16)	3.62 (92)	7.09 (180)	3.15 (80)	0.79 (20)	1/2 (13)	3.19 (81)	1.75 (44)
HZR29A-M12	2	900-1250	1.094 - 1.289 (27.8 - 32.7)	715 (30/19) - 1113 (54/19)	1.081 - 1.293 (27.5 - 32.8)	4.92 (125)	0.71 (18)	0.51 (13)	3.62 (92)	10.51 (267)	4.33 (110)	0.79 (20)	1/2 (13)	3.19 (81)	1.75 (44)
HZR29A-M13	2	900-1250	1.094 - 1.289 (27.8 - 32.7)	715 (30/19) - 1113 (54/19)	1.081 - 1.293 (27.5 - 32.8)	3.15 (80)	0.59 (15)	0.51 (13)	3.62 (92)	10.51 (267)	4.33 (110)	0.71 (18)	1/2 (13)	3.19 (81)	1.75 (44)
HZR29A-M17	1	900-1250	1.094 - 1.289 (27.8 - 32.7)	715 (30/19) - 1113 (54/19)	1.081 - 1.293 (27.5 - 32.8)	2.64 (67)	0.56 (14)	0.51 (13)	3.62 (92)	8.19 (208)	3.94 (100)	1.10 (28)	1/2 (13)	3.19 (81)	1.75 (44)
HZR30A-2N	1	1250-1600	1.289 - 1.459 (32.7 - 37.1)	1113 (54/19) - 1431 (45/7)	1.293 - 1.427 (32.8 - 36.3)	3.07 (78)	0.56 (14)	0.63 (16)	3.66 (93)	7.99 (203)	3.00 (76)	0.63 (16)	5/8 (16)	3.70 (94)	1.75 (44)
HZR30A-4N	2	1250-1600	1.289 - 1.459 (32.7 - 37.1)	1113 (54/19) - 1431 (45/7)	1.293 - 1.427 (32.8 - 36.3)	3.07 (78)	0.56 (14)	0.63 (16)	3.66 (93)	7.99 (203)	3.00 (76)	0.63 (16)	5/8 (16)	3.70 (94)	1.75 (44)
HZR30A-4N4	2	1250-1600	1.289 - 1.459 (32.7 - 37.1)	1113 (54/19) - 1431 (45/7)	1.293 - 1.427 (32.8 - 36.3)	4.00 (102)	0.56 (14)	0.63 (16)	3.66 (93)	8.98 (228)	4.00 (102)	1.14 (29)	5/8 (16)	3.70 (94)	1.75 (44)
HZR30A-4N4-M1	2	1250-1600	1.289 - 1.459 (32.7 - 37.1)	1113 (54/19) - 1431 (45/7)	1.293 - 1.427 (32.8 - 36.3)	4.00 (102)	0.56 (14)	0.79 (20)	3.66 (93)	8.98 (228)	4.00 (102)	1.14 (29)	5/8 (16)	3.70 (94)	1.75 (44)
HZR30A-4M	2	1250-1600	1.289 - 1.459 (32.7 - 37.1)	1113 (54/19) - 1431 (45/7)	1.293 - 1.427 (32.8 - 36.3)	4.00 (102)	0.56 (14)	0.63 (16)	3.66 (93)	8.98 (228)	4.00 (102)	0.98 (25)	5/8 (16)	3.70 (94)	1.97 (50)
HZR30A-M1	2	1250-1600	1.289 - 1.459 (32.7 - 37.1)	1113 (54/19) - 1431 (45/7)	1.293 - 1.427 (32.8 - 36.3)	4.92 (125)	0.63 (16)	0.63 (16)	3.66 (93)	9.76 (248)	4.72 (120)	0.63 (16)	5/8 (16)	3.70 (94)	1.75 (44)
HZR32A-2N	1	1500-2000	1.412 - 1.632 (35.9 - 41.5)	1272 (54/19) - 1780(84/19)	1.382 - 1.602 (35.1 - 40.7)	3.07 (78)	0.56 (14)	0.71 (18)	3.90 (99)	8.23 (209)	3.00 (76)	0.63 (16)	5/8 (16)	3.82 (97)	1.75 (44)
HZR32A-4N	2	1500-2000	1.412 - 1.632 (35.9 - 41.5)	1272 (54/19) - 1780 (84/19)	1.382 - 1.602 (35.1 - 40.7)	3.07 (78)	0.56 (14)	0.71 (18)	3.90 (99)	8.23 (209)	3.00 (76)	0.63 (16)	5/8 (16)	3.82 (97)	1.75 (44)
HZR32A-4N4	2	1500-2000	1.412 - 1.632 (35.9 - 41.5)	1272 (54/19) - 1780 (84/19)	1.382 - 1.602 (35.1 - 40.7)	4.00 (102)	0.56 (14)	0.71 (18)	3.90 (99)	9.21 (234)	4.00 (102)	1.14 (29)	5/8 (16)	3.82 (97)	1.75 (44)
HZR32A-4M	2	1500-2000	1.412 - 1.632 (35.9 - 41.5)	1272 (54/19) - 1780 (84/19)	1.382 - 1.602 (35.1 - 40.7)	4.00 (102)	0.56 (14)	0.71 (18)	3.90 (99)	9.21 (234)	4.00 (102)	0.98 (25)	5/8 (16)	3.82 (97)	1.97 (50)

*S denotes SOLID wire, and T denotes STRANDED wire

H2ZR-A

Aluminum Bolted Terminal
Two Cable to Pad
230kV and Below

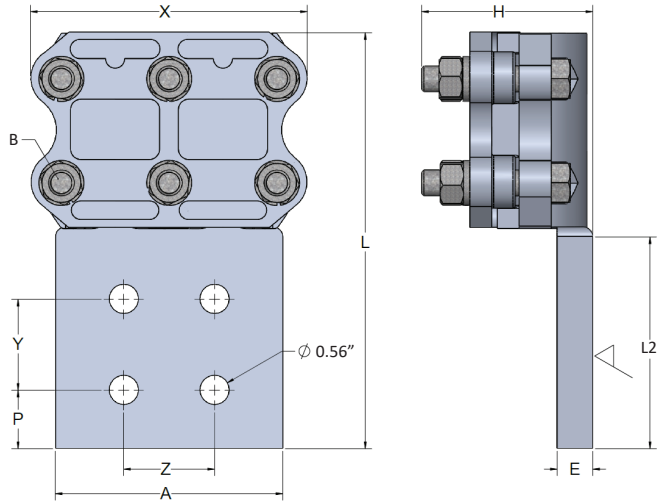

Aluminum alloy terminal to connect two aluminum cables to a flat pad surface. Electrical joint compound is recommended for all cable/flat contact surfaces.

CASTINGS: Aluminum Alloy

HARDWARE: Galvanized Steel

See page 136 for special order options such as tin plating, hardware materials and specific angles. Contact PLP for further details, unlisted option and/or special applications.

Example: H2ZR14A-4N with Stainless Steel Hardware would be H2ZR14A-4N-SS.

Part Number	Cable AWG/MCM				Dimensions									
	AAC	AAC Diameter	ACSR	ACSR Diameter	in (mm)									
		in (mm)		in (mm)	A	E	H	L	L2	P	B	X	Y	Z
H2ZR14A-4N	1/OT - 250*	0.372 - 0.575 (9.4 - 14.6)	1/0 (6/1) - 4/0 (6/1)	0.398 - 0.563 (10.1 - 14.3)	3.00 (76)	0.51 (13)	2.28 (58)	5.91 (150)	3.00 (76)	0.63 (16)	1/2 (13)	4.00 (102)	1.75 (44)	1.75 (44)
H2ZR17A-4N	250 - 400	0.575 - 0.728 (14.6 - 18.5)	4/0 (6/1) - 397 (26/7)	0.563 - 0.783 (14.3 - 19.9)	3.00 (76)	0.63 (16)	2.80 (71)	6.26 (159)	3.00 (76)	0.63 (16)	1/2 (13)	4.29 (109)	1.75 (44)	1.75 (44)
H2ZR27A-4N	600 - 900	0.893 - 1.094 (22.7 - 32.7)	477 (30/7) - 795 (54/7)	0.883 - 1.093 (14.3 - 19.9)	3.00 (76)	0.67 (17)	3.15 (80)	6.81 (173)	3.00 (76)	0.63 (16)	1/2 (13)	4.88 (124)	1.75 (44)	1.75 (44)
H2ZR29A-4N	900 - 1250	1.094 - 1.289 (27.8 - 32.7)	715 (30/19) - 1113 (54/19)	1.081 - 1.293 (27.5 - 32.8)	4.37 (111)	0.67 (17)	3.78 (96)	7.32 (186)	3.00 (76)	0.63 (16)	1/2 (13)	5.24 (133)	1.75 (44)	1.75 (44)
H2ZR29A-4N4	900 - 1250	1.094 - 1.289 (27.8 - 32.7)	715 (30/19) - 1113 (54/19)	1.081 - 1.293 (27.5 - 32.8)	4.37 (111)	0.67 (17)	3.78 (96)	7.95 (202)	4.00 (102)	1.14 (29)	1/2 (13)	5.24 (133)	1.75 (44)	1.75 (44)
H2ZR30A-4N	1250 - 1600	1.289 - 1.459 (32.7 - 37.1)	1113 (54/19) - 1431 (45/7)	1.293 - 1.427 (32.8 - 36.3)	4.37 (111)	0.75 (19)	3.66 (93)	7.83 (199)	3.00 (76)	0.63 (16)	5/8 (16)	6.10 (155)	1.75 (44)	1.75 (44)
H2ZR30A-4N4	1250 - 1600	1.289 - 1.459 (32.7 - 37.1)	1113 (54/19) - 1431 (45/7)	1.293 - 1.427 (32.8 - 36.3)	4.37 (111)	0.75 (19)	3.66 (93)	8.86 (225)	4.00 (102)	1.14 (29)	5/8 (16)	6.10 (155)	1.75 (44)	1.75 (44)
H2ZR32A-4N4	1500 - 2000	1.412 - 1.632 (35.9 - 41.5)	1272 (54/19) - 1780 (84/19)	1.382 - 1.602 (35.1 - 40.7)	4.37 (111)	0.87 (22)	3.90 (99)	10.00 (254)	4.00 (102)	1.14 (29)	5/8 (16)	6.38 (162)	1.75 (44)	1.75 (44)

*S denotes solid wire, and T denotes standard wire.

AZ

Bronze Bolted Terminal
Cable to One Hole Pad, Single U-Bolt
230kV and Below

Copper alloy terminal to connect cable in the main to a flat pad surface. Electrical joint compound is recommended for all cable/flat contact surfaces.

CASTINGS: Copper Alloy

HARDWARE: Silicone Bronze

See page 136 for special order options such as tin plating, hardware materials and specific angles. Contact PLP for further details, unlisted option and/or special applications.

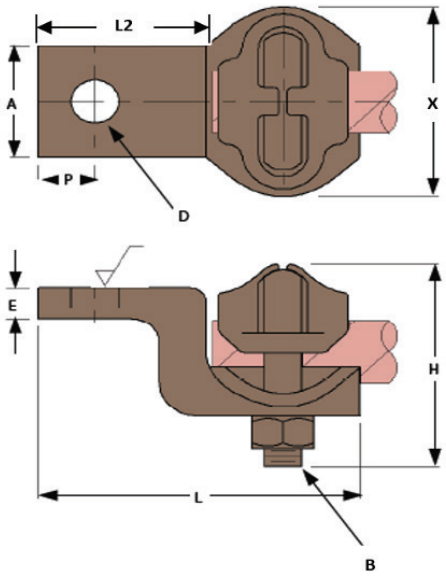

Part Number	Cable AWG/ MCM	Diameter	Dimensions in (mm)								
		in (mm)	A	D	E	H	L	L2	P	B	X
AZ10	6S - 1/0T(*)	.162 - .372 (4.1 - 9.4)	0.91 (23)	0.43 (11)	0.24 (6)	1.57 (40)	2.8 (71)	1.38 (35)	0.43 (11)	3/8 (10)	1.54 (39)
AZ13	1/0T - 4/0T(*)	.372 - .528 (9.4 - 13.4)	1.14 (29)	0.43 (11)	0.39 (10)	1.85 (47)	2.91 (74)	1.54 (39)	0.51 (13)	3/8 (10)	1.81 (46)
AZ15	1/0T - 300(*)	.372 - .630 (9.4 - 16.0)	1.14 (29)	0.43 (11)	0.39 (10)	1.93 (49)	3.23 (82)	1.75 (44)	0.63 (16)	3/8 (10)	2.01 (51)
AZ19	300 - 500	.630 - .814 (16.0 - 20.7)	1.38 (35)	0.56 (14)	0.39 (10)	2.17 (55)	3.94 (100)	2.13 (54)	0.83 (21)	3/8 (10)	2.32 (59)

*S denotes SOLID wire, and T denotes STRANDED wire

AAZ

Bronze Bolted Terminal Cable to Pad, Double U-Bolt 230kV and Below

Copper alloy terminal to connect cable in the main to a flat pad surface. Electrical joint compound is recommended for all cable/flat contact surfaces.

CASTINGS: Copper Alloy

HARDWARE: Silicone Bronze

See page 136 for special order options such as tin plating, hardware materials and specific angles. Contact PLP for further details, unlisted option and/or special applications.

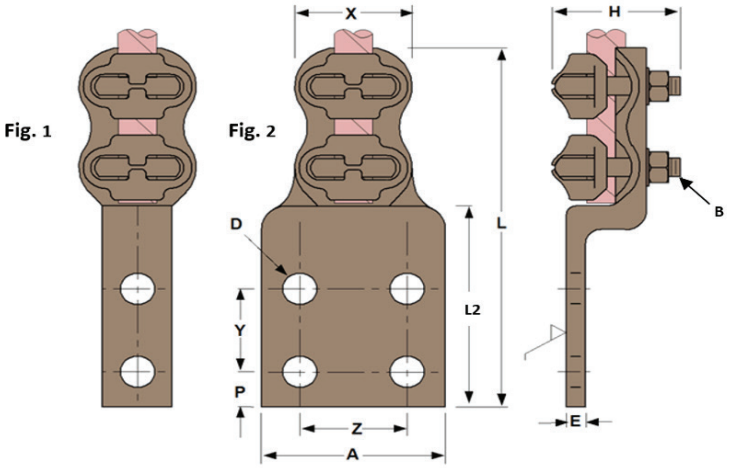

Part Number	Figure	Cable AWG/ MCM	Diameter	Dimensions in (mm)									
			in (mm)	A	D	E	H	L	L2	P	B	X	Y/Z
AAZ11-2N	1	6S - 1/0T(*)	.162 - .372 (4.1 - 9.4)	1.14 (29)	0.56 (14)	0.24 (6)	1.57 (40)	5.98 (152)	3.27 (83)	0.63 (16)	3/8 (10)	1.54 (39)	1.75 (44)
AAZ13-2N	1	1/0T - 4/0T(*)	.372 - .528 (9.4 - 13.4)	1.14 (29)	0.56 (14)	0.31 (8)	1.85 (47)	6.14 (156)	3.46 (88)	0.63 (16)	3/8 (10)	1.69 (43)	1.75 (44)
AAZ15-2N	1	1/0T - 300(*)	.372 - .630 (9.4 - 16.0)	1.14 (29)	0.56 (14)	0.31 (8)	2.09 (53)	6.46 (164)	3.66 (93)	0.63 (16)	3/8 (10)	1.93 (49)	1.75 (44)
AAZ15-4N	2	1/0T - 300(*)	.372 - .630 (9.4 - 16.0)	3.00 (76)	0.56 (14)	0.31 (8)	2.09 (53)	6.46 (164)	3.66 (93)	0.63 (16)	3/8 (10)	1.93 (49)	1.75 (44)
AAZ19-2N	1	300 - 500	.630 - .814 (16.0 - 20.7)	1.38 (35)	0.56 (14)	0.39 (10)	2.20 (56)	6.77 (172)	3.70 (94)	0.63 (16)	3/8 (10)	2.24 (57)	1.75 (44)
AAZ19-4N	2	300 - 500	.630 - .814 (16.0 - 20.7)	3.00 (76)	0.56 (14)	0.39 (10)	2.20 (56)	6.77 (172)	3.70 (94)	0.63 (16)	3/8 (10)	2.24 (57)	1.75 (44)
AAZ25-2N	1	500 - 800	.814 - 1.031 (20.7 - 26.2)	1.61 (41)	0.56 (14)	0.39 (10)	2.64 (67)	7.56 (192)	3.70 (94)	0.63 (16)	1/2 (13)	2.72 (69)	1.75 (44)
AAZ25-4N	2	500 - 800	.814 - 1.031 (20.7 - 26.2)	3.00 (76)	0.56 (14)	0.39 (10)	2.64 (67)	7.56 (192)	3.70 (94)	0.63 (16)	1/2 (13)	2.72 (69)	1.75 (44)
AAZ28-2N	1	750 - 1000	.998 - 1.152 (25.3 - 29.3)	2.05 (52)	0.56 (14)	0.59 (15)	3.00 (76)	7.80 (198)	3.70 (94)	0.63 (16)	1/2 (13)	2.87 (73)	1.75 (44)
AAZ28-4N	2	750 - 1000	.998 - 1.152 (25.3 - 29.3)"	3.00 (76)	0.56 (14)	0.51 (13)	3.00 (76)	7.80 (198)	3.70 (94)	0.63 (16)	1/2 (13)	2.87 (73)	1.75 (44)

*S denotes SOLID wire, and T denotes STRANDED wire

CZ

Bronze Bolted Terminal Cable to Pad, Single Eyebolt 230kV and Below

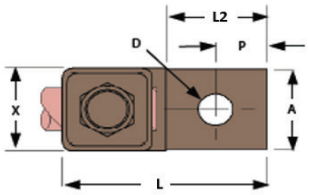

Fig. 1

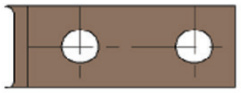

Fig. 2

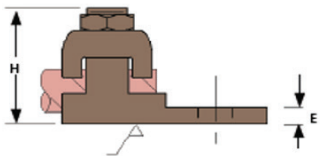

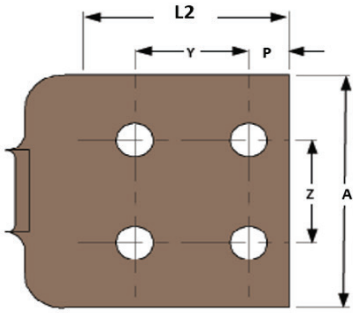

Fig. 3

Copper alloy terminal to connect cable in the main to a flat pad surface. Electrical joint compound is recommended for all cable/flat contact surfaces.

CASTINGS: Copper Alloy

HARDWARE: Silicone Bronze

See page 136 for special order options such as tin plating, hardware materials and specific angles. Contact PLP for further details, unlisted option and/or special applications.

Part Number	Figure	Cable AWG/MCM	Diameter	Dimensions in (mm)								
			in (mm)	A	D	E	H	L	L2	P	X	Y/Z
CZ8T	1	14S-8T(*)	.064 - .146 (1.6 - 3.7)	0.67 (17)	0.24 (6)	0.16 (4)	0.79 (20)	1.46 (37)	0.59 (15)	0.28 (7)	0.75 (19)	–
CZ4T	1	6S-4T(*)	.162 - .232 (4.1 - 5.9)	0.67 (17)	0.28 (7)	0.16 (4)	0.79 (20)	1.46 (37)	0.59 (15)	0.31 (8)	0.75 (19)	–
CZ4T-2	2	6S-4T(*)	.162 - .232 (4.1 - 5.9)	0.67 (17)	0.28 (7)	0.16 (4)	0.79 (20)	2.13 (54)	1.22 (31)	0.31 (8)	0.75 (19)	0.59 (15)
CZ1T	1	4T-1T(*)	.232 - .332 (5.9 - 8.4)	0.67 (17)	0.28 (7)	0.24 (6)	1.02 (26)	1.77 (45)	0.71 (18)	0.31 (8)	0.75 (19)	–
CZ1T-2	2	4T-1T(*)	.232 - .332 (5.9 - 8.4)	0.67 (17)	0.35 (9)	0.24 (6)	1.02 (26)	2.56 (65)	1.50 (38)	0.31 (8)	0.75 (19)	0.83 (21)
CZ20	1	1/0T-2/0T(*)	.372 - .419 (9.4 - 10.6)	0.83 (21)	0.39 (10)	0.24 (6)	1.18 (30)	2.05 (52)	0.91 (23)	0.43 (11)	0.91 (23)	–
CZ20-1N	1	1/0T-2/0T(*)	.372 - .419 (9.4 - 10.6)	1.00 (25)	0.56 (14)	0.24 (6)	1.18 (30)	2.32 (59)	1.14 (29)	0.51 (13)	0.91 (23)	–
CZ20-2	2	1/0T-2/0T(*)	.372 - .419 (9.4 - 10.6)	0.83 (21)	0.39 (10)	0.24 (6)	1.18 (30)	2.83 (72)	1.85 (47)	0.43 (11)	0.91 (23)	1.00 (25)
CZ20-2N	2	1/0T-2/0T(*)	.372 - .419 (9.4 - 10.6)	1.00 (25)	0.56 (14)	0.24 (6)	1.18 (30)	4.21 (107)	3.00 (76)	0.63 (16)	0.91 (23)	1.75 (44)
CZ20-4N	3	1/0T-2/0T(*)	.372 - .419 (9.4 - 10.6)	3.00 (76)	0.56 (14)	0.24 (6)	1.18 (30)	4.21 (107)	3.00 (76)	0.63 (16)	0.91 (23)	1.75 (44)
CZ40	1	3/0T-4/0T(*)	.470 - .528 (11.9 - 13.4)	1.00 (25)	0.39 (10)	0.24 (6)	1.46 (37)	2.32 (59)	1.06 (27)	0.43 (11)	1.06 (27)	–
CZ40-1N	1	3/0T-4/0T(*)	.470 - .528 (11.9 - 13.4)	1.00 (25)	0.56 (14)	0.24 (6)	1.46 (37)	2.32 (59)	1.06 (27)	0.51 (13)	1.06 (27)	–
CZ40-2	2	3/0T-4/0T(*)	.470 - .528 (11.9 - 13.4)	1.00 (25)	0.39 (10)	0.24 (6)	1.46 (37)	3.19 (81)	2.01 (51)	0.43 (11)	1.06 (27)	1.00 (25)
CZ40-2N	2	3/0T-4/0T(*)	.470 - .528 (11.9 - 13.4)	1.00 (25)	0.56 (14)	0.24 (6)	1.46 (37)	4.33 (110)	3.00 (76)	0.63 (16)	1.06 (27)	1.75 (44)
CZ40-4N	3	3/0T-4/0T(*)	.470 - .528 (11.9 - 13.4)	3.00 (76)	0.56 (14)	0.24 (6)	1.46 (37)	4.33 (110)	3.00 (76)	0.63 (16)	1.06 (27)	1.75 (44)
CZ350	1	250-350	.575 - .681 (14.6 - 17.3)	1.22 (31)	0.51 (13)	0.31 (8)	1.65 (42)	2.76 (70)	1.38 (35)	0.67 (17)	1.18 (30)	–
CZ350-1N	1	250-350	.575 - .681 (14.6 - 17.3)	1.22 (31)	0.56 (14)	0.31 (8)	1.65 (42)	2.83 (72)	1.38 (35)	0.63 (16)	1.18 (30)	–
CZ350-2	2	250-350	.575 - .681 (14.6 - 17.3)	1.22 (31)	0.39 (10)	0.31 (8)	1.65 (42)	3.31 (84)	2.01 (51)	0.43 (11)	1.18 (30)	1.00 (25)
CZ350-2N	2	250-350	.575 - .681 (14.6 - 17.3)	1.22 (31)	0.56 (14)	0.31 (8)	1.65 (42)	4.49 (114)	3.00 (76)	0.63 (16)	1.18 (30)	1.75 (44)
CZ350-4N	3	250-350	.575 - .681 (14.6 - 17.3)	3.00 (76)	0.56 (14)	0.31 (8)	1.65 (42)	4.49 (114)	3.00 (76)	0.63 (16)	1.18 (30)	1.75 (44)

CZ CONTINUED

Bronze Bolted Terminal Cable to Pad, Single Eyebolt 230kV and Below

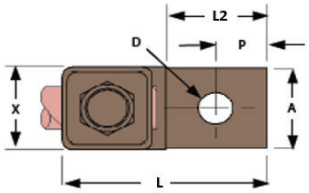

Fig. 1

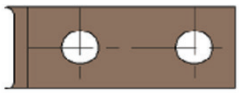

Fig. 2

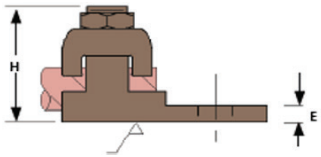

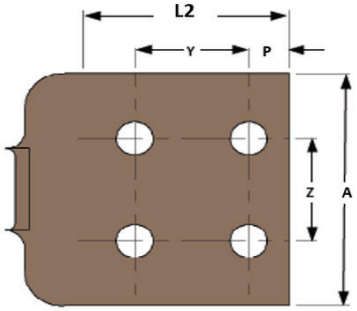

Fig. 3

Part Number	Figure	Cable AWG/MCM	Diameter	Dimensions in (mm)								
			in (mm)	A	D	E	H	L	L2	P	X	Y/Z
CZ500	1	400-500	.728 - .814 (18.5 - 20.7)	1.38 (35)	0.51 (13)	0.24 (6)	1.93 (49)	3.15 (80)	1.61 (41)	0.83 (21)	1.42 (36)	–
CZ500-1N	1	400-500	.728 - .814 (18.5 - 20.7)	1.38 (35)	0.56 (14)	0.31 (8)	1.93 (49)	3.15 (80)	1.61 (41)	0.83 (21)	1.42 (36)	–
CZ500-2	2	400-500	.728 - .814 (18.5 - 20.7)	1.38 (35)	0.39 (10)	0.31 (8)	1.93 (49)	3.62 (92)	2.01 (51)	0.43 (11)	1.42 (36)	1.00 (25)
CZ500-2N	2	400-500	.728 - .814 (18.5 - 20.7)	1.38 (35)	0.56 (14)	0.24 (6)	1.93 (49)	4.76 (121)	3.00 (76)	0.63 (16)	1.42 (36)	1.75 (44)
CZ500-4	3	400-500	.728 - .814 (18.5 - 20.7)	1.89 (48)	0.43 (11)	0.31 (8)	1.93 (49)	3.62 (92)	2.20 (56)	0.51 (13)	1.42 (36)	1.00 (25)
CZ500-4N	3	400-500	.728 - .814 (18.5 - 20.7)	3.00 (76)	0.56 (14)	0.31 (8)	1.93 (49)	4.76 (121)	3.00 (76)	0.63 (16)	1.42 (36)	1.75 (44)
CZ800	1	600-800	.893 - 1.031 (22.7 - 26.2)	1.61 (41)	0.67 (17)	0.35 (9)	2.28 (58)	3.74 (95)	1.85 (47)	0.94 (24)	1.75 (44)	–
CZ800-2	2	600-800	.893 - 1.031 (22.7 - 26.2)	1.61 (41)	0.43 (11)	0.35 (9)	2.28 (58)	4.00 (102)	2.13 (54)	0.51 (13)	1.75 (44)	1.14 (29)
CZ800-2N	2	600-800	.893 - 1.031 (22.7 - 26.2)	1.61 (41)	0.56 (14)	0.35 (9)	2.28 (58)	4.92 (125)	3.00 (76)	0.63 (16)	1.75 (44)	1.75 (44)
CZ800-4N	3	600-800	.893 - 1.031 (22.7 - 26.2)	3.00 (76)	0.56 (14)	0.35 (9)	2.28 (58)	4.92 (125)	3.00 (76)	0.63 (16)	1.75 (44)	1.75 (44)
CZ800-4N4	3	600 - 800	.893 - 1.031 (22.7 - 26.2)	4.00 (102)	0.56 (14)	0.35 (9)	2.28 (58)	5.91 (150)	4.00 (102)	0.63 (16)	1.75 (44)	1.75 (44)
CZ1000	1	850-1000	1.062 - 1.152 (27.0 - 29.3)	1.89 (48)	0.67 (17)	0.51 (13)	2.48 (63)	4.00 (102)	2.01 (51)	0.98 (25)	1.85 (47)	–
CZ1000-4	3	850-1000	1.062 - 1.152 (27.0 - 29.3)	2.13 (54)	0.43 (11)	0.51 (13)	2.48 (63)	4.25 (108)	2.20 (56)	0.51 (13)	1.85 (47)	1.14 (29)
CZ1000-4N	3	850-1000	1.062 - 1.152 (27.0 - 29.3)	3.00 (76)	0.56 (14)	0.51 (13)	2.48 (63)	5.04 (128)	3.00 (76)	0.63 (16)	1.85 (47)	1.75 (44)
CZ1000-4N4	3	850-1000	1.062 - 1.152 (27.0 - 29.3)	4.00 (102)	0.56 (14)	0.51 (13)	2.48 (63)	6.02 (153)	4.00 (102)	0.63 (16)	1.85 (47)	1.75 (44)

*S denotes SOLID wire, and T denotes STRANDED wire

CCZ

Bronze Bolted Terminal Cable to Pad, Double Eyebolt 230kV and Below

Fig. 1

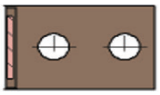

Fig. 2

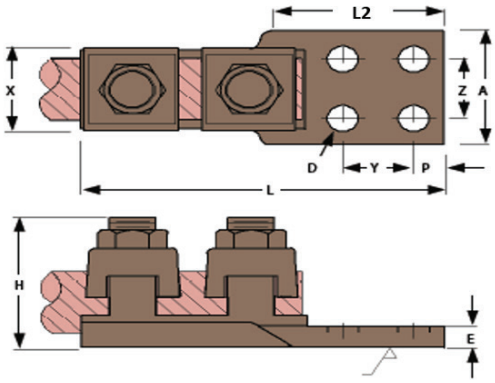

Fig. 3

Copper alloy terminal to connect cable in the main to a flat pad surface. Electrical joint compound is recommended for all cable/flat contact surfaces.

CASTINGS: Copper Alloy

HARDWARE: Silicone Bronze

See page 136 for special order options such as tin plating, hardware materials and specific angles. Contact PLP for further details, unlisted option and/or special applications.

Part Number	Figure	Cable AWG/MCM	Diameter in (mm)	Dimensions in (mm)								
				A	D	E	H	L	L2	P	X	Y/Z
CCZ4T	1	6S-4T(*)	.162 - .232 (4.1 - 5.9)	0.63 (16)	0.28 (7)	0.20 (5)	0.79 (20)	2.32 (59)	0.63 (16)	0.31 (8)	0.75 (19)	–
CCZ4T-2	2	6S-4T(*)	.162 - .232 (4.1 - 5.9)	0.63 (16)	0.28 (7)	0.20 (5)	0.79 (20)	2.95 (75)	1.26 (32)	0.35 (9)	0.75 (19)	0.63 (16)
CCZ4T-2N	2	6S-4T(*)	.162 - .232 (4.1 - 5.9)	1.00 (25)	0.56 (14)	0.24 (6)	0.87 (22)	4.80 (122)	3.00 (76)	0.63 (16)	0.75 (19)	1.75 (44)
CCZ1T	1	4T-1T(*)	.232 - .332 (5.9 - 8.4)	0.63 (16)	0.28 (7)	0.24 (6)	0.98 (25)	2.76 (70)	0.75 (19)	0.35 (9)	0.75 (19)	–
CCZ1T-2	2	4T-1T(*)	.232 - .332 (5.9 - 8.4)	0.63 (16)	0.35 (9)	0.24 (6)	0.98 (25)	3.54 (90)	1.50 (38)	0.35 (9)	0.75 (19)	0.83 (21)
CCZ1T-2N	2	4T-1T(*)	.232 - .332 (5.9 - 8.4)	1.00 (25)	0.56 (14)	0.28 (7)	0.98 (25)	5.04 (128)	3.00 (76)	0.63 (16)	0.75 (19)	1.75 (44)
CCZ20	1	1/0T-2/0T(*)	.372 - .419 (9.4 - 10.6)	0.83 (21)	0.39 (10)	0.24 (6)	1.18 (30)	3.11 (79)	0.87 (22)	0.43 (11)	0.87 (22)	–
CCZ20-2	2	1/0T-2/0T(*)	.372 - .419 (9.4 - 10.6)	0.83 (21)	0.39 (10)	0.24 (6)	1.18 (30)	4.09 (104)	1.85 (47)	0.43 (11)	0.87 (22)	1.00 (25)
CCZ20-2N	2	1/0T-2/0T(*)	.372 - .419 (9.4 - 10.6)	1.10 (28)	0.56 (14)	0.24 (6)	1.18 (30)	5.24 (133)	3.00 (76)	0.59 (15)	0.87 (22)	1.75 (44)
CCZ40	1	3/0T-4/0T(*)	.470 - .528 (11.9 - 13.4)	1.00 (25)	0.39 (10)	0.24 (6)	1.57 (40)	3.54 (90)	1.00 (25)	0.51 (13)	1.10 (28)	–
CCZ40-2	2	3/0T-4/0T(*)	.470 - .528 (11.9 - 13.4)	1.00 (25)	0.39 (10)	0.24 (6)	1.57 (40)	4.65 (118)	2.00 (51)	0.43 (11)	1.10 (28)	1.00 (25)
CCZ40-2N	2	3/0T-4/0T(*)	.470 - .528 (11.9 - 13.4)	1.00 (25)	0.56 (14)	0.24 (6)	1.57 (40)	5.47 (139)	3.15 (80)	0.63 (16)	1.10 (28)	1.75 (44)
CCZ350	1	250-350	.575 - .681 (14.6 - 17.3)	1.18 (30)	0.51 (13)	0.28 (7)	1.69 (43)	4.25 (108)	1.38 (35)	0.67 (17)	1.18 (30)	–

*S denotes SOLID wire, and T denotes STRANDED wire

CCZ CONTINUED

Bronze Bolted Terminal Cable to Pad, Double Eyebolt 230kV and Below

Fig. 1

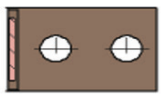

Fig. 2

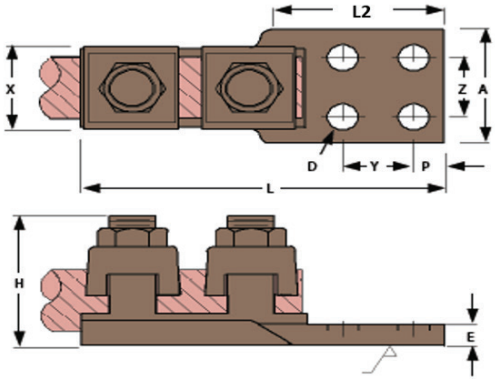

Fig. 3

Part Number	Figure	Cable AWG/MCM	Diameter	Dimensions								
				in (mm)								
			in (mm)	A	D	E	H	L	L2	P	X	Y/Z
CCZ350-2	2	250-350	.575 - .681 (14.6 - 17.3)	1.18 (30)	0.39 (10)	0.28 (7)	1.69 (43)	4.76 (121)	2.00 (51)	0.43 (11)	1.18 (30)	1.00 (25)
CCZ350-2N	2	250-350	.575 - .681 (14.6 - 17.3)	1.18 (30)	0.56 (14)	0.28 (7)	1.69 (43)	5.98 (152)	3.15 (80)	0.63 (16)	1.18 (30)	1.75 (44)
CCZ350-4N	3	250-350	.575 - .681 (14.6 - 17.3)	1.18 (30)	0.56 (14)	0.31 (8)	1.69 (43)	5.98 (152)	3.15 (80)	0.63 (16)	1.18 (30)	1.75 (44)
CCZ500	1	400-500	.728 - .814 (18.5 - 20.7)	3.00 (76)	0.51 (13)	0.28 (7)	1.97 (50)	4.92 (125)	1.61 (41)	0.83 (21)	1.38 (35)	–
CCZ500-2	2	400-500	.728 - .814 (18.5 - 20.7)	1.38 (35)	0.56 (14)	0.28 (7)	1.97 (50)	5.24 (133)	2.00 (51)	0.43 (11)	1.38 (35)	1.00 (25)
CCZ500-2N	2	400-500	.728 - .814 (18.5 - 20.7)	1.38 (35)	0.56 (14)	0.28 (7)	1.97 (50)	6.46 (164)	3.15 (80)	0.63 (16)	1.38 (35)	1.75 (44)
CCZ500-4	3	400-500	.728 - .814 (18.5 - 20.7)	1.89 (48)	0.43 (11)	0.28 (7)	1.97 (50)	5.16 (131)	2.20 (56)	0.43 (11)	1.38 (35)	1.00 (25)
CCZ500-4N	3	400-500	.728 - .814 (18.5 - 20.7)	3.00 (76)	0.56 (14)	0.28 (7)	1.97 (50)	6.50 (165)	3.11 (79)	0.63 (16)	1.38 (35)	1.75 (44)
CCZ800	1	600-800	".893 - 1.031 (22.7 - 26.2)"	1.65 (42)	0.67 (17)	0.35 (9)	2.28 (58)	6.93 (176)	1.85 (47)	1.00 (25)	1.75 (44)	–
CCZ800-2N	2	600-800	.893 - 1.031 (22.7 - 26.2)	1.65 (42)	0.56 (14)	0.35 (9)	2.28 (58)	6.93 (176)	3.07 (78)	0.63 (16)	1.75 (44)	1.75 (44)
CCZ800-4N	3	600-800	.893 - 1.031 (22.7 - 26.2)	3.00 (76)	0.56 (14)	0.39 (10)	2.28 (58)	6.93 (176)	3.07 (78)	0.63 (16)	1.75 (44)	1.75 (44)
CCZ1000-4N	3	850-1000	1.062 - 1.152 (27.0 - 29.3)	3.00 (76)	0.56 (14)	0.51 (13)	2.48 (63)	7.09 (180)	3.07 (78)	0.63 (16)	1.85 (47)	1.75 (44)

*S denotes SOLID wire, and T denotes STRANDED wire

C2Z

Bronze Bolted Terminal Two Cables to Pad, Eyebolt 230kV and Below

Copper alloy terminal to connect two cables in the main to a flat pad surface. Electrical joint compound is recommended for all cable/flat contact surfaces.

CASTINGS: Copper Alloy

HARDWARE: Silicone Bronze

See page 136 for special order options such as tin plating, hardware materials and specific angles. Contact PLP for further details, unlisted option and/or special applications.

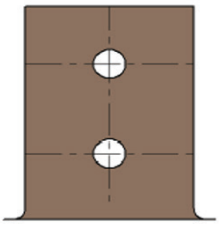

Fig. 1

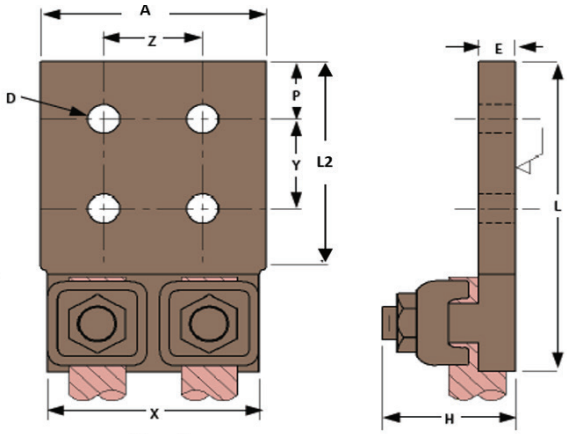

Fig. 2

Part Number	Figure	Cable AWG/MCM	Diameter	Dimensions in (mm)								
			in (mm)	A	D	E	H	L	L2	P	X	Y/Z
C2Z1T-2	1	4T-1T(*)	.232 - .332 (5.9 - 8.4)	1.54 (39)	0.43 (11)	0.20 (5)	1.00 (25)	3.00 (76)	1.85 (47)	0.43 (11)	1.57 (40)	1.00 (25)
C2Z20-2	1	1/0T-2/0T(*)	.372 - .419 (9.4 - 10.6)	1.65 (42)	0.43 (11)	0.20 (5)	1.18 (30)	3.11 (79)	2.01 (51)	0.43 (11)	1.93 (49)	1.00 (25)
C2Z20-4	2	1/0T-2/0T(*)	.372 - .419 (9.4 - 10.6)	1.89 (48)	0.43 (11)	0.24 (6)	1.18 (30)	3.11 (79)	2.01 (51)	0.51 (13)	1.93 (49)	1.00 (25)
C2Z20-2N	1	1/0T-2/0T(*)	.372 - .419 (9.4 - 10.6)	1.65 (42)	0.56 (14)	0.24 (6)	1.18 (30)	4.25 (108)	3.11 (79)	0.63 (16)	1.93 (49)	1.75 (44)
C2Z20-4N	2	1/0T-2/0T(*)	.372 - .419 (9.4 - 10.6)	3.00 (76)	0.56 (14)	0.24 (6)	1.18 (30)	4.25 (108)	3.11 (79)	0.63 (16)	1.93 (49)	1.75 (44)
C2Z40-2N	1	3/0T-4/0T(*)	.470 - .528 (11.9 - 13.4)	1.89 (48)	0.56 (14)	0.24 (6)	1.46 (37)	4.33 (110)	3.11 (79)	0.63 (16)	2.20 (56)	1.75 (44)
C2Z40-4N	2	3/0T-4/0T(*)	.470 - .528 (11.9 - 13.4)	3.00 (76)	0.56 (14)	0.24 (6)	1.46 (37)	4.53 (115)	3.11 (79)	0.63 (16)	2.20 (56)	1.75 (44)
C2Z350-2N	1	250-350	.575 - .681 (14.6 - 17.3)	2.40 (61)	0.56 (14)	0.31 (8)	1.65 (42)	4.45 (113)	3.11 (79)	0.63 (16)	2.68 (68)	1.75 (44)
C2Z350-4	2	250-350	.575 - .681 (14.6 - 17.3)	2.40 (61)	0.56 (14)	0.31 (8)	1.65 (42)	3.86 (98)	2.52 (64)	0.51 (13)	2.68 (68)	1.38 (35)
C2Z350-4N	2	250-350	.575 - .681 (14.6 - 17.3)	3.00 (76)	0.56 (14)	0.31 (8)	1.65 (42)	4.53 (115)	3.11 (79)	0.63 (16)	2.68 (68)	1.75 (44)
C2Z500-2N	1	400-500	.728 - .814 (18.5 - 20.7)	2.56 (65)	0.56 (14)	0.39 (10)	1.93 (49)	4.76 (121)	3.11 (79)	0.63 (16)	3.03 (77)	1.75 (44)
C2Z500-4	2	400-500	.728 - .814 (18.5 - 20.7)	2.56 (65)	0.56 (14)	0.39 (10)	1.93 (49)	4.17 (106)	2.64 (67)	0.55 (14)	3.03 (77)	1.38 (35)
C2Z500-4N	2	400-500	.728 - .814 (18.5 - 20.7)	3.00 (76)	0.56 (14)	0.39 (10)	1.93 (49)	4.76 (121)	3.11 (79)	0.63 (16)	3.03 (77)	1.75 (44)
C2Z800-2N	1	600-800	.893 - 1.031 (22.7 - 26.2)	3.00 (76)	0.56 (14)	0.43 (11)	2.36 (60)	5.00 (127)	3.11 (79)	0.63 (16)	3.86 (98)	1.75 (44)
C2Z800-4	2	600-800	.893 - 1.031 (22.7 - 26.2)	3.00 (76)	0.56 (14)	0.43 (11)	2.36 (60)	5.00 (127)	3.11 (79)	0.67 (17)	3.86 (98)	1.61 (41)
C2Z800-4N	2	600-800	.893 - 1.031 (22.7 - 26.2)	3.00 (76)	0.56 (14)	0.47 (12)	2.36 (60)	5.12 (130)	3.11 (79)	0.63 (16)	3.86 (98)	1.75 (44)
C2Z1000-2N	1	850-1000	1.062 - 1.152 (27.0 - 29.3)	3.00 (76)	0.56 (14)	0.51 (13)	2.48 (63)	5.28 (134)	3.27 (83)	0.63 (16)	4.09 (104)	1.75 (44)
C2Z1000-4N	2	850-1000	1.062 - 1.152 (27.0 - 29.3)	3.23 (82)	0.56 (14)	0.51 (13)	2.48 (63)	5.28 (134)	3.27 (83)	0.63 (16)	4.09 (104)	1.75 (44)
C2Z1500-4N	2	1100-1500	1.209 - 1.412 (30.7 - 35.9)	3.54 (90)	0.56 (14)	0.67 (17)	3.00 (76)	5.79 (147)	3.27 (83)	0.63 (16)	4.72 (120)	1.75 (44)
C2Z1500-4N4	2	1100-1500	1.209 - 1.412 (30.7 - 35.9)	4.00 (102)	0.56 (14)	0.75 (19)	3.08 (78)	6.50 (165)	4.00 (102)	1.14 (29)	4.72 (120)	1.75 (44)

*S denotes SOLID wire, and T denotes STRANDED wire

C3Z

Bronze Bolted Terminal Three Cables to Pad, Eyebolt 230kV and Below

Copper alloy terminal to connect three cables in the main to a flat pad surface. Electrical joint compound is recommended for all cable/flat contact surfaces.

CASTINGS: Copper Alloy

HARDWARE: Silicone Bronze

See page 136 for special order options such as tin plating, hardwar materials and specific angles. Contact PLP for further details, unlisted option and/or special applications.

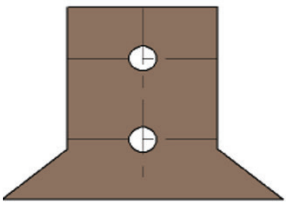

Fig. 1

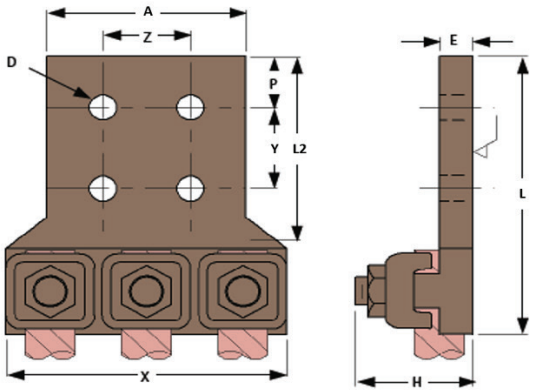

Fig. 2

Part Number	Figure	Cable AWG/MCM	Diameter	Dimensions in (mm)								
			in (mm)	A	D	E	H	L	L2	P	X	Y/Z
C3Z20-2N	1	1/0T-2/0T(*)	.372 - .419 (9.4 - 10.6)	1.61 (41)	0.56 (14)	0.28 (7)	1.18 (30)	4.33 (110)	3.11 (79)	0.63 (16)	3.00 (76)	1.75 (44)
C3Z20-4N	2	1/0T-2/0T(*)	.372 - .419 (9.4 - 10.6)	3.00 (76)	0.56 (14)	0.28 (7)	1.18 (30)	4.17 (106)	3.11 (79)	0.63 (16)	3.00 (76)	1.75 (44)
C3Z40-2N	1	3/0T-4/0T(*)	.470 - .528 (11.9 - 13.4)	1.89 (48)	0.56 (14)	0.28 (7)	1.54 (39)	4.45 (113)	3.11 (79)	0.63 (16)	3.35 (85)	1.75 (44)
C3Z40-4N	2	3/0T-4/0T(*)	.470 - .528 (11.9 - 13.4)	3.00 (76)	0.56 (14)	0.28 (7)	1.54 (39)	4.45 (113)	3.11 (79)	0.63 (16)	3.35 (85)	1.75 (44)
C3Z350-2N	1	250-350	.575 - .681 (14.6 - 17.3)	2.13 (54)	0.56 (14)	0.35 (9)	1.69 (43)	4.45 (113)	3.11 (79)	0.63 (16)	4.13 (105)	1.75 (44)
C3Z350-4N	2	250-350	.575 - .681 (14.6 - 17.3)	3.00 (76)	0.56 (14)	0.35 (9)	1.69 (43)	4.45 (113)	3.11 (79)	0.63 (16)	4.13 (105)	1.75 (44)
C3Z500-2N	1	400-500	.728 - .814 (18.5 - 20.7)	2.56 (65)	0.56 (14)	0.35 (9)	1.93 (49)	4.76 (121)	3.11 (79)	0.63 (16)	4.65 (118)	1.75 (44)
C3Z500-4	2	400-500	.728 - .814 (18.5 - 20.7)	2.56 (65)	0.56 (14)	0.35 (9)	1.93 (49)	4.21 (107)	2.64 (67)	0.56 (14)	4.65 (118)	1.75 (44)
C3Z500-4N	2	400-500	.728 - .814 (18.5 - 20.7)	3.07 (78)	0.56 (14)	0.35 (9)	1.93 (49)	4.76 (121)	3.11 (79)	0.63 (16)	4.65 (118)	1.75 (44)
C3Z800-2N	1	600-800	.893 - 1.031 (22.7 - 26.2)	3.07 (78)	0.56 (14)	0.47 (12)	2.32 (59)	5.12 (130)	3.11 (79)	0.63 (16)	5.67 (144)	1.75 (44)
C3Z800-4N	2	600-800	.893 - 1.031 (22.7 - 26.2)	3.07 (78)	0.56 (14)	0.47 (12)	2.32 (59)	5.12 (130)	3.11 (79)	0.63 (16)	5.67 (144)	1.75 (44)
C3Z1000-4N	2	850-1000	1.062 - 1.152 (27.0 - 29.3)	3.50 (89)	0.56 (14)	0.47 (12)	2.48 (63)	5.47 (139)	3.27 (83)	0.63 (16)	6.06 (154)	1.75 (44)
C3Z1500-4N	2	1100-1500	1.209 - 1.412 (30.7 - 35.9)	3.50 (89)	0.56 (14)	0.75 (19)	3.00 (76)	5.91 (150)	3.27 (83)	0.63 (16)	7.17 (182)	1.75 (44)

*S denotes SOLID wire, and T denotes STRANDED wire

LZ

Bronze Bolted Terminal
Cable to One-Hole Pad, Set Screw
230kV and Below

Copper alloy terminal to connect cable in the main to a one hole flat pad surface. Electrical joint compound is recommended for all cable/flat contact surfaces.

CASTINGS: Copper Alloy

See page 136 for special order options such as tin plating, hardware materials and specific angles. Contact PLP for further details, unlisted option and/or special applications.

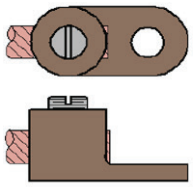

Fig. 1

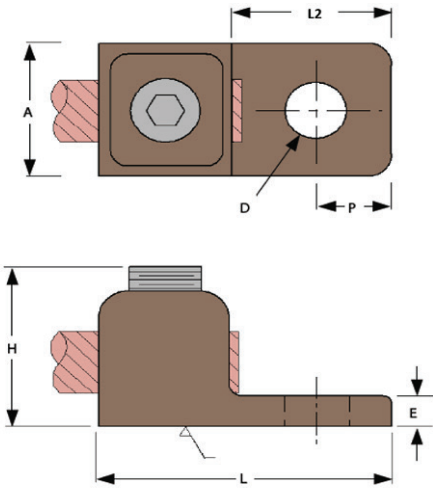

Fig. 2

Part Number	Figure	Set Screw Material	Cable AWG/MCM	Diameter	Dimensions in (mm)						
				in (mm)	A	D	E	H	L	L2	P
LZ4T	1	Steel	14S-4T(*)	.064 - .232 (1.6 - 5.9)	0.56 (14)	0.28 (7)	0.16 (4)	0.75 (19)	1.14 (29)	0.56 (14)	0.28 (7)
LZ10	2	Steel	4T-1/0T(*)	.232 - .372 (5.9 - 9.4)	0.75 (19)	0.43 (11)	0.20 (5)	0.87 (22)	1.57 (40)	0.87 (22)	0.39 (10)
LZ10-M1	2	Brass	4T-1/0T(*)	.232 - .372 (5.9 - 9.4)	0.75 (19)	0.43 (11)	0.20 (5)	1.34 (34)	1.57 (40)	0.87 (22)	0.39 (10)
LZ250	2	Steel	4T-250(*)	.232 - .575 (5.9 - 14.6)	0.94 (24)	0.43 (11)	0.20 (5)	1.26 (32)	1.89 (48)	0.94 (24)	0.43 (11)
LZ250-M1	2	Brass	4T-250(*)	.232 - .575 (5.9 - 14.6)	0.94 (24)	0.43 (11)	0.20 (5)	1.75 (44)	1.89 (48)	0.94 (24)	0.43 (11)
LZ250-M2	2	Brass	4T-250(*)	.232 - .575 (5.9 - 14.6)	0.94 (24)	0.43 (11)	0.20 (5)	1.26 (32)	1.89 (48)	0.94 (24)	0.43 (11)
LZ250-M3	2	Steel	4T-250(*)	.232 - .575 (5.9 - 14.6)	0.94 (24)	0.43 (11)	0.20 (5)	1.75 (44	1.89 (48)	0.94 (24)	0.43 (11)
LZ250-M4	2	Brass	4T-250(*)	.232 - .575 (5.9 - 14.6)	1.02 (26)	0.56 (14)	0.20 (5)	1.85 (47)	2.01 (51)	0.94 (24)	0.43 (11)
LZ500	2	Steel	4/0T-500(*)	528 - .814 (13.4 - 20.7)	1.42 (36)	0.56 (14)	0.31 (8)	1.77 (45)	2.52 (64)	1.14 (29)	0.56 (14)
LZ500-M1	2	Brass	4/0T-500(*)	.528 - .814 (13.4 - 20.7)	1.42 (36)	0.56 (14)	0.31 (8)	2.05 (52)	2.52 (64)	1.14 (29)	0.56 (14)
LZ500-M2	2	Steel	4/0T-500(*)	.528 - .814 (13.4 - 20.7)	1.42 (36)	0.56 (14)	0.31 (8)	2.05 (52)	2.52 (64)	1.14 (29)	0.56 (14)
LZ500-M4	2	Brass	4/0T-500(*)	.528 - .814 (13.4 - 20.7)	1.42 (36)	0.56 (14)	0.31 (8)	1.77 (45)	2.52 (64)	1.14 (29)	0.56 (14)
LZ800	2	Steel	250-800	.575 - 1.031 (14.6 - 26.2)	1.61 (41)	0.56 (14)	0.35 (9)	2.24 (57)	3.31 (84)	1.75 (44)	0.75 (19)

*S denotes SOLID wire, and T denotes STRANDED wire

HZ

Bronze Bolted Terminal Tube to Pad 230kV and Below

Copper alloy terminal to connect one tube in the main to a flat pad surface. Electrical joint compound is recommended for all tube/flat contact surfaces.

CASTINGS: Copper Alloy

HARDWARE: Silicone Bronze

See page 136 for special order options such as tin plating, hardware materials and specific angles. Contact PLP for further details, unlisted option and/or special applications.

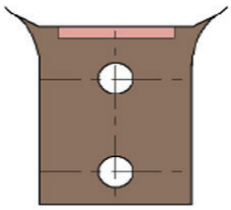

Fig. 1

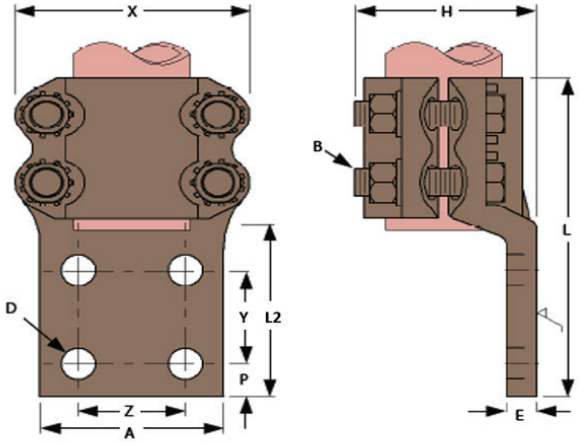

Fig. 2

Part Number	Figure	NPS Tube Diameter	Dimensions in (mm)									
		in (mm)	A	D	E	H	L	L2	P	B	X	Y/Z
HZ37-2N	1	3/4 (19)	1.65 (42)	0.56 (14)	0.39 (10)	1.81 (46)	5.24 (133)	3.00 (76)	0.63 (16)	3/8 (10)	2.48 (63)	1.75 (44)
HZ37-4N	2	3/4 (19)	3.00 (76)	0.56 (14)	0.39 (10)	1.81 (46)	5.24 (133)	3.00 (76)	0.63 (16)	3/8 (10)	2.48 (63)	1.75 (44)
HZ38-2N	1	1 (25)	1.89 (48)	0.56 (14)	0.39 (10)	1.89 (48)	5.47 (139)	3.00 (76)	0.63 (16)	3/8 (10)	2.87 (73)	1.75 (44)
HZ38-4N	2	1 (25)	3.00 (76)	0.56 (14)	0.39 (10)	1.89 (48)	5.47 (139)	3.00 (76)	0.63 (16)	3/8 (10)	2.87 (73)	1.75 (44)
HZ39-2N	1	1-1/4 (32)	2.20 (56)	0.56 (14)	0.51 (13)	2.44 (62)	6.14 (156)	3.00 (76)	0.63 (16)	1/2 (13)	3.62 (92)	1.75 (44)
HZ39-4N	2	1-1/4 (32)	3.00 (76)	0.56 (14)	0.51 (13)	2.44 (62)	6.14 (156)	3.00 (76)	0.63 (16)	1/2 (13)	3.62 (92)	1.75 (44)
HZ39-4N4	2	1-1/4 (32)	4.00 (102)	0.56 (14)	0.51 (13)	2.44 (62)	7.24 (184)	4.00 (102)	1.14 (29)	1/2 (13)	3.62 (92)	1.75 (44)
HZ40-2N	1	1-1/2 (38)	2.48 (63)	0.56 (14)	0.51 (13)	2.72 (69)	5.94 (151)	3.00 (76)	0.63 (16)	1/2 (13)	3.78 (96)	1.75 (44)
HZ40-4N	2	1-1/2 (38)	3.00 (76)	0.56 (14)	0.51 (13)	2.72 (69)	5.94 (151)	3.00 (76)	0.63 (16)	1/2 (13)	3.78 (96)	1.75 (44)
HZ40-4N4	2	1-1/2 (38)	4.00 (102)	0.56 (14)	0.51 (13)	2.72 (69)	6.97 (177)	4.00 (102)	1.14 (29)	1/2 (13)	3.78 (96)	1.75 (44)
HZ40-4M	2	1-1/2 (38)	4.00 (102)	0.56 (14)	0.51 (13)	2.72 (69)	6.97 (177)	4.00 (102)	0.98 (25)	1/2 (13)	3.78 (96)	1.97 (50)
HZ41-2N	1	2 (51)	3.07 (78)	0.56 (14)	0.51 (13)	2.72 (69)	5.98 (152)	3.00 (76)	0.63 (16)	1/2 (13)	4.69 (119)	1.75 (44)
HZ41-4N	2	2 (51)	3.07 (78)	0.56 (14)	0.51 (13)	2.72 (69)	5.98 (152)	3.00 (76)	0.63 (16)	1/2 (13)	4.69 (119)	1.75 (44)
HZ41-4N4	2	2 (51)	4.00 (102)	0.56 (14)	0.51 (13)	2.72 (69)	7.24 (184)	4.00 (102)	1.14 (29)	1/2 (13)	4.69 (119)	1.75 (44)
HZ42-2N	1	2-1/2 (64)	3.07 (78)	0.56 (14)	0.63 (16)	3.66 (93)	5.98 (152)	3.00 (76)	0.63 (16)	1/2 (13)	5.39 (137)	1.75 (44)
HZ42-4N	2	2-1/2 (64)	3.82 (97)	0.56 (14)	0.63 (16)	3.66 (93)	5.98 (152)	3.00 (76)	0.63 (16)	1/2 (13)	5.39 (137)	1.75 (44)
HZ43-4N	2	3 (76)	4.49 (114)	0.56 (14)	0.71 (18)	4.33 (110)	6.57 (167)	3.00 (76)	0.63 (16)	5/8 (16)	6.22 (158)	1.75 (44)
HZ43-4N4	2	3 (76)	4.49 (114)	0.56 (14)	0.71 (18)	4.33 (110)	7.56 (192)	4.00 (102)	1.14 (29)	5/8 (16)	6.22 (158)	1.75 (44)
HZ44-2N	1	3-1/2 (89)	4.49 (114)	0.56 (14)	0.87 (22)	5.12 (130)	6.50 (165)	3.00 (76)	0.63 (16)	5/8 (16)	6.89 (175)	1.75 (44)
HZ44-4N	2	3-1/2 (89)	4.49 (114)	0.56 (14)	0.87 (22)	5.12 (130)	6.50 (165)	3.00 (76)	0.63 (16)	5/8 (16)	6.89 (175)	1.75 (44)
HZ45-2N	1	4 (102)	5.00 (127)	0.56 (14)	0.87 (22)	5.63 (143)	7.24 (184)	3.00 (76)	0.63 (16)	5/8 (16)	7.40 (188)	1.75 (44)
HZ45-4N	2	4 (102)	5.00 (127)	0.56 (14)	0.87 (22)	5.63 (143)	7.24 (184)	3.00 (76)	0.63 (16)	5/8 (16)	7.40 (188)	1.75 (44)
HZ47-4N	2	5 (127)	5.00 (127)	0.56 (14)	1.00 (25)	6.77 (172)	8.27 (210)	3.00 (76)	0.63 (16)	5/8 (16)	8.50 (216)	1.75 (44)

*S denotes SOLID wire, and T denotes STRANDED wire

HZR

Bronze Bolted Terminal
Cable to Pad
230kV and Below

Copper alloy terminal to connect one cable in the main to a flat pad surface. Electrical joint compound is recommended for all cable/flat contact surfaces.

CASTINGS: Copper Alloy

HARDWARE: Silicone Bronze

See page 136 for special order options such as tin plating, hardware materials and specific angles. Contact PLP for further details, unlisted option and/or special applications.

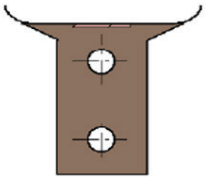

Fig. 1

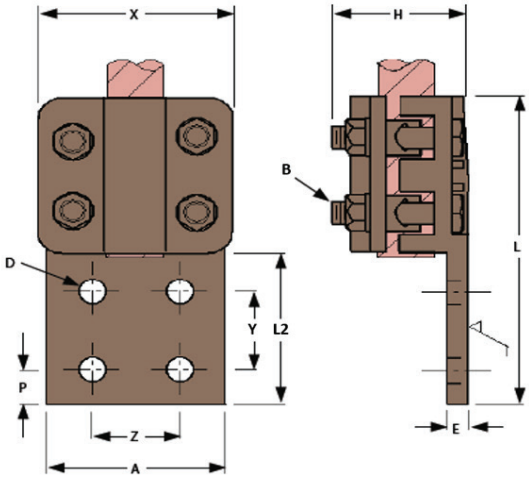

Fig. 2

Part Number	Figure	Cable AWG/MCM	Diameter	Dimensions in (mm)									
			in (mm)	A	D	E	H	L	L2	P	B	X	Y/Z
HZR10-2N	1	4S-1/0T(*)	.204 - .372 (5.2 - 9.4)	1.26 (32)	0.56 (14)	0.31 (8)	1.57 (40)	5.59 (142)	3.00 (76)	0.63 (16)	3/8 (10)	1.77 (45)	1.75 (44)
HZR10-4N	2	4S-1/0T(*)	.204 - .372 (5.2 - 9.4)	3.00 (76)	0.56 (14)	0.31 (8)	1.57 (40)	5.59 (142)	3.00 (76)	0.63 (16)	3/8 (10)	1.77 (45)	1.75 (44)
HZR13-2N	1	2/0S-4/0T(*)	.365 - .528 (9.3 - 13.4)	1.26 (32)	0.56 (14)	0.31 (8)	1.69 (43)	5.83 (148)	3.00 (76)	0.63 (16)	3/8 (10)	1.93 (49)	1.75 (44)
HZR13-2M	1	2/0S-4/0T(*)	.365 - .528 (9.3 - 13.4)	1.26 (32)	0.56 (14)	0.31 (8)	1.69 (43)	6.81 (173)	4.00 (102)	0.98 (25)	3/8 (10)	1.93 (49)	1.97 (50)
HZR13-M3	1	2/0S-4/0T(*)	.365 - .528 (9.3 - 13.4)	1.26 (32)	0.56 (14)	0.31 (8)	1.69 (43)	6.42 (163)	3.62 (92)	0.63 (16)	3/8 (10)	1.93 (49)	2.36 (60)
HZR13-M5	1	2/0S-4/0T(*)	.365 - .528 (9.3 - 13.4)	2.36 (60)	0.51 (13)	0.31 (8)	1.69 (43)	7.40 (188)	4.57 (116)	0.98 (25)	3/8 (10)	1.93 (49)	2.36 (60)
HZR13-M4	2	2/0S-4/0T(*)	.365 - .528 (9.3 - 13.4)	4.00 (102)	0.56 (14)	0.31 (8)	1.69 (43)	6.81 (173)	4.00 (102)	0.63 (16)	3/8 (10)	1.93 (49)	2.36 (60)
HZR13-4N	2	2/0S-4/0T(*)	.365 - .528 (9.3 - 13.4)	3.00 (76)	0.56 (14)	0.31 (8)	1.69 (43)	5.83 (148)	3.00 (76)	0.63 (16)	3/8 (10)	1.93 (49)	1.75 (44)
HZR19-2N	1	250-500	.575 - .814 (14.6 - 20.7)	1.69 (43)	0.56 (14)	0.39 (10)	2.28 (58)	5.91 (150)	3.00 (76)	0.63 (16)	3/8 (10)	2.28 (58)	1.75 (44)
HZR19-2M	1	250-500	.575 - .814 (14.6 - 20.7)	1.69 (43)	0.56 (14)	0.39 (10)	2.28 (58)	6.89 (175)	4.00 (102)	0.98 (25)	3/8 (10)	2.28 (58)	1.97 (50)
HZR19-M3	1	250-500	.575 - .814 (14.6 - 20.7)	1.69 (43)	0.56 (14)	0.39 (10)	1.97 (50)	5.91 (150)	3.00 (76)	0.63 (16)	3/8 (10)	2.28 (58)	1.57 (40)
HZR19-M2	2	250-500	.575 - .814 (14.6 - 20.7)	3.00 (76)	0.56 (14)	0.39 (10)	1.97 (50)	5.91 (150)	3.00 (76)	0.63 (16)	3/8 (10)	2.28 (58)	1.57 (40)
HZR19-4M	2	250-500	.575 - .814 (14.6 - 20.7)	4.00 (102)	0.56 (14)	0.39 (10)	2.28 (58)	6.89 (175)	4.00 (102)	0.98 (25)	3/8 (10)	2.28 (58)	1.97 (50)
HZR19-4N	2	250-500	.575 - .814 (14.6 - 20.7)	3.00 (76)	0.56 (14)	0.39 (10)	2.28 (58)	5.91 (150)	3.00 (76)	0.63 (16)	3/8 (10)	2.28 (58)	1.75 (44)
HZR25-2N	1	500-800	.814 - 1.031 (20.7 - 26.2)	1.69 (43)	0.56 (14)	0.51 (13)	2.40 (61)	5.87 (149)	3.00 (76)	0.63 (16)	3/8 (10)	2.48 (63)	1.75 (44)
HZR25-4N	2	500-800	.814 - 1.031 (20.7 - 26.2)	3.00 (76)	0.56 (14)	0.51 (13)	2.40 (61)	6.10 (155)	3.00 (76)	0.63 (16)	3/8 (10)	2.48 (63)	1.75 (44)

HZR CONTINUED

Bronze Bolted Terminal
Cable to Pad
230kV and Below

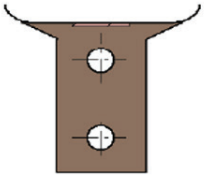

Fig. 1

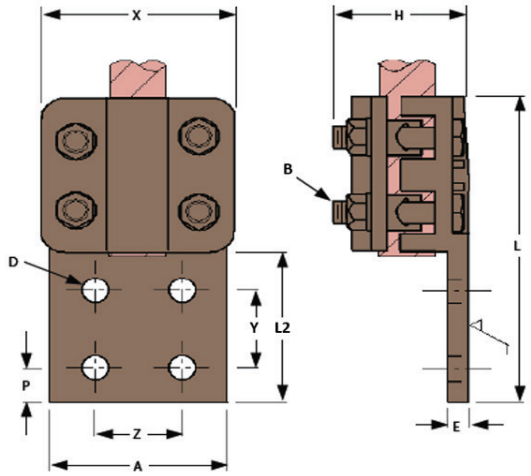

Fig. 2

Part Number	Figure	Cable AWG/MCM	Diameter	Dimensions in (mm)									
			in (mm)	A	D	E	H	L	L2	P	B	X	Y/Z
HZR25-4N4	2	500-800	.814 - 1.031 (20.7 - 26.2)	4.00 (102)	0.56 (14)	0.51 (13)	2.40 (61)	7.13 (181)	4.00 (102)	1.14 (29)	3/8 (10)	2.48 (63)	1.75 (44)
HZR25-M1	2	500-800	.814 - 1.031 (20.7 - 26.2)	3.00 (76)	0.56 (14)	0.51 (13)	2.24 (57)	6.10 (155)	3.00 (76)	0.63 (16)	3/8 (10)	2.48 (63)	1.57 (40)
HZR28-2N	1	750-1000	.998 - 1.152 (25.3 - 29.3)	2.01 (51)	0.56 (14)	0.51 (13)	2.44 (62)	6.26 (159)	3.00 (76)	0.63 (16)	1/2 (13)	3.07 (78)	1.75 (44)
HZR28-4N	2	750-1000	.998 - 1.152 (25.3 - 29.3)	3.00 (76)	0.56 (14)	0.51 (13)	2.44 (62)	6.26 (159)	3.00 (76)	0.63 (16)	1/2 (13)	3.07 (78)	1.75 (44)
HZR28-4N4	2	750-1000	.998 - 1.152 (25.3 - 29.3)	4.00 (102)	0.56 (14)	0.51 (13)	2.44 (62)	7.17 (182)	4.00 (102)	1.14 (29)	1/2 (13)	3.07 (78)	1.75 (44)
HZR30-2N	1	1000-1500	1.152 - 1.412 (29.3 - 35.9)	2.76 (70)	0.56 (14)	0.51 (13)	2.83 (72)	6.50 (165)	3.00 (76)	0.63 (16)	1/2 (13)	3.31 (84)	1.75 (44)
HZR30-4N	2	1000-1500	1.152 - 1.412 (29.3 - 35.9)	3.00 (76)	0.56 (14)	0.51 (13)	2.83 (72)	6.50 (165)	3.00 (76)	0.63 (16)	1/2 (13)	3.31 (84)	1.75 (44)
HZR30-4M	2	1000-1500	1.152 - 1.412 (29.3 - 35.9)	4.00 (102)	0.56 (14)	0.51 (13)	2.83 (72)	7.48 (190)	4.00 (102)	0.98 (25)	1/2 (13)	3.31 (84)	1.97 (50)

*S denotes SOLID wire, and T denotes STRANDED wire

XZF-R

Aluminum Compression Terminal
Cable to Pad
230kV and Below

Aluminum alloy compression terminal for connecting one cable to a flat pad. Crimp with "Burndy" tools, and electrical joint compound is recommended for all cable/flat contact surfaces.

CASTINGS: Aluminum Alloy

See page 136 for special order options such as tin plating, hardware materials and specific angles. Contact PLP for further details, unlisted option and/or special applications.

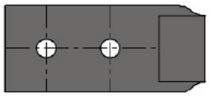

Fig. 1

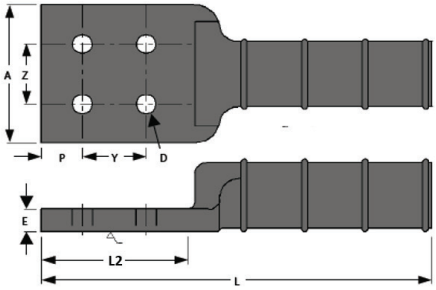

Fig. 2

Fig. A

Fig. B

Part Number	Figure	Cable AWG/MCM				Dimensions in (mm)							Burndy Tool	Burndy Die	Number of Compressions
		AAC	AAC Diameter in (mm)	ACSR	ACSR Diameter in (mm)	A	D	E	L	L2	P	Y/Z			
XZF2R-2N	1A	2T*	0.292 (7.4)	2 (6/1)	0.316 (8.0)	2.32 (59)	0.56 (14.2)	0.31 (8)	5.98 (152)	3.00 (76)	0.63 (16)	1.75 (44)	Y35 or Y750	U239	2
XZF10R-2N	1A	1/0T*	0.372 (9.4)	1/0 (6/1)	0.398 (10.1)	2.32 (59)	0.56 (14.2)	0.35 (9)	7.09 (180)	3.00 (76)	0.63 (16)	1.75 (44)	Y35 or Y750	UBG	4
XZF10R-4N	2A	1/0T*	0.372 (9.4)	1/0 (6/1)	0.398 (10.1)	3.00 (76)	0.56 (14.2)	0.39 (10)	7.09 (180)	3.00 (76)	0.63 (16)	1.75 (44)	Y35 or Y750	UBG	4
XZF12R-2N	1A	3/0T*	0.470 (11.9)	3/0 (6/1)	0.502 (12.8)	2.32 (59)	0.56 (14.2)	0.39 (10)	7.09 (180)	3.00 (76)	0.63 (16)	1.75 (44)	Y35 or Y750	U247	3
XZF12R-4N	1A	3/0T*	0.470 (11.9)	3/0 (6/1)	0.502 (12.8)	3.00 (76)	0.56 (14.2)	0.39 (10)	7.09 (180)	3.00 (76)	0.63 (16)	1.75 (44)	Y35 or Y750	U247	3
XZF13R-2N	1A	4/0T*	0.528 (13.4)	4/0 (6/1)	0.563 (14.3)	2.32 (59)	0.56 (14.2)	0.39 (10)	7.09 (180)	3.00 (76)	0.63 (16)	1.75 (44)	Y35 or Y750	U247	3
XZF15R-2N	1B	250 - 266	0.575 - 0.593 (14.6 - 15.1)	266 (26/7)	0.642 (16.3)	2.32 (59)	0.56 (14.2)	0.39 (10)	7.09 (180)	3.00 (76)	0.63 (16)	1.75 (44)	Y35 or Y750	U321	4
XZF15R-4N	2B	250 - 266	0.575 - 0.593 (14.6 - 15.1)	266 (26/7)	0.642 (16.3)	3.00 (76)	0.56 (14.2)	0.39 (10)	7.28 (185)	3.00 (76)	0.63 (16)	1.75 (44)	Y35 or Y750	U321	4
XZF171R-2N	1B	366 - 350	0.666 - 0.679 (16.9 - 17.3)	336 (18/1)	0.684 (17.4)	2.32 (59)	0.56 (14.2)	0.39 (10)	7.09 (180)	3.00 (76)	0.63 (16)	1.75 (44)	Y35 or Y750	U321	4
XZF171R-4N	2B	336 - 350	0.666 - 0.679 (16.9 - 17.3)	336 (18/1)	0.684 (17.4)	3.00 (76)	0.56 (14.2)	0.39 (10)	7.28 (185)	3.00 (76)	0.63 (16)	1.75 (44)	Y35 or Y750	U321	4
XZF18R-2N	1A	397	0.724 (18.4)	336 (26/7) - 336 (30/7)	0.720 - 0.741 (18.3 - 18.8)	2.32 (59)	0.56 (14.2)	0.39 (10)	7.52 (191)	3.00 (76)	0.63 (16)	1.75 (44)	Y35 or Y750	U316	4
XZF18R-4N	2A	397	0.724 (18.4)	336 (26/7) - 366 (30/7)	0.720 - 0.741 (18.3 - 18.8)	3.00 (76)	0.56 (14.2)	0.39 (10)	7.52 (191)	3.00 (76)	0.63 (16)	1.75 (44)	Y35 or Y750	U316	4
XZF22R-2N	1A	500	0.814 (20.7)	477 (24/7) - 477 (30/7)	0.846 - 0.883 (21.5 - 22.4)	2.48 (63)	0.56 (14.2)	0.39 (10)	8.46 (215)	3.00 (76)	0.63 (16)	1.75 (44)	Y35 or Y750	U261	5
XZF22R-4N	2A	500	0.814 (20.7)	477 (24/7) - 477 (30/7)	0.846 - 0.883 (21.5 - 22.4)	3.00 (76)	0.56 (14.2)	0.39 (10)	8.46 (215)	3.00 (76)	0.63 (16)	1.75 (44)	Y35 or Y750	U261	5
XZF24R-2N	1A	556	0.857 (21.7)	556 (24/7) - 556 (26/7)	0.914 - 0.927 (23.2 - 23.5)	2.52 (64)	0.56 (14.2)	0.39 (10)	8.46 (215)	3.00 (76)	0.63 (16)	1.75 (44)	Y35 or Y750	U261	5
XZF24R-4N	2A	556	0.857 (21.7)	556 (24/7) - 556 (26/7)	0.914 - 0.927 (23.2 - 23.5)	3.00 (76)	0.56 (14.2)	0.39 (10)	8.46 (215)	3.00 (76)	0.63 (16)	1.75 (44)	Y45	U261	5

*S denotes solid wire, and T denotes standard wire.

XZF-R CONTINUED

Aluminum Compression Terminal
Cable to Pad
230kV and Below

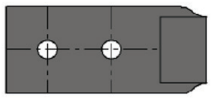

Fig. 1

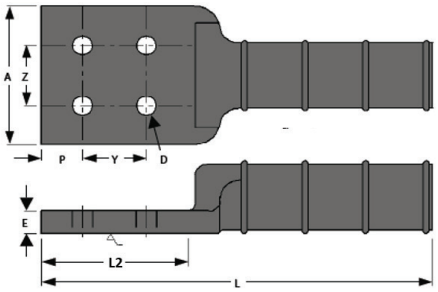

Fig. 2

Fig. A

Fig. B

Part Number	Figure	Cable AWG/MCM				Dimensions							Burndy Tool	Burndy Die	Number of Compressions
		AAC	AAC Diameter	ACSR	ACSR Diameter	in (mm)									
			in (mm)		in (mm)	A	D	E	L	L2	P	Y/Z			
XZF24R-4N	2A	556	0.857 (21.7)	556 (24/7) - 556 (26/7)	0.914 - 0.927 (23.2 - 23.5)	3.00 (76)	0.56 (14.2)	0.39 (10)	8.46 (215)	3.00 (76)	0.63 (16)	1.75 (44)	Y45	U261	5
XZF28R-2N	1B	700 - 795	0.964 - 1.028 (24.5 - 26.1)	605 (26/7) - 666 (26/7)	0.966 - 1.014 (24.5 - 25.8)	2.52 (64)	0.56 (14.2)	0.63 (16)	9.65 (245)	3.00 (76)	0.63 (16)	1.75 (44)	Y45	S319	6
XZF28R-4N	2B	700 - 795	0.964 - 1.028 (24.5 - 26.1)	605 (26/7) - 666 (26/7)	0.966 - 1.014 (24.5 - 25.8)	3.00 (76)	0.56 (14.2)	0.63 (16)	9.65 (245)	3.00 (76)	0.63 (16)	1.75 (44)	Y45	S319	6
XZF30R-2N	1B	900	1.094 (27.8)	795 (54/7) - 954 (45/7)	1.092 - 1.165 (27.7 - 29.6)	2.52 (64)	0.56 (14.2)	0.63 (16)	9.65 (245)	3.00 (76)	0.63 (16)	1.75 (44)	Y45	352	3
XZF30R-4N	2B	945	1.126 (28.6)	795 (54/7) - 954 (45/7)	1.092 - 1.165 (27.7 - 29.6)	3.00 (76)	0.56 (14.2)	0.63 (16)	9.76 (248)	3.00 (76)	0.63 (16)	1.75 (44)	Y45	352	3
XZF30R-4N4	1B	1000	1.152 (29.3)	795 (54/7) - 954 (45/7)	1.092 - 1.165 (27.7 - 29.6)	4.00 (102)	0.56 (14.2)	0.63 (16)	10.75 (273)	4.00 (102)	1.14 (29)	1.75 (44)	Y45	352	3
XZF35R-2N	1B	1272	1.300 (33.0)	1033 (54/7) - 1113 (45/7)	1.245 - 1.259 (31.6 - 32.0)	2.52 (64)	0.56 (14.2)	0.75 (19)	10.04 (255)	3.00 (76)	0.63 (16)	1.75 (44)	Y60B	L422	3
XZF35R-4N	2B	1272	1.300 (33.0)	1033 (54/7) - 1113 (45/7)	1.245 - 1.259 (31.6 - 32.0)	3.00 (76)	0.56 (14.2)	0.75 (19)	10.04 (255)	3.00 (76)	0.63 (16)	1.75 (44)	Y60B	L422	3
XZF35R-4N4	2B	1272	1.300 (33.0)	1033 (54/7) - 1113 (45/7)	1.245 - 1.259 (31.6 - 32.0)	4.00 (102)	0.56 (14.2)	0.75 (19)	10.55 (268)	4.00 (102)	1.14 (29)	1.75 (44)	Y60B	L422	3
XZF35R-4M	2B	1272	1.300 (33.0)	1033 (54/7) - 1113 (45/7)	1.245 - 1.259 (31.6 - 32.0)	4.00 (102)	0.56 (14.2)	0.75 (19)	10.55 (268)	4.00 (102)	0.98 (25)	1.97 (50)	Y60B	L422	3

ZTC

Aluminum Compression Terminal Cable to Pad 230kV and Below

Aluminum alloy compression terminal for connecting one cable to a flat pad. Electrical joint compound is recommended for all cable/flat contact surfaces.

CASTINGS: Aluminum Alloy

HARDWARE: Galvanized Steel

See page 136 for special order options such as tin plating, hardware materials and specific angles. Contact PLP for further details, unlisted option and/or special applications.

Example: ZTC-14-0N4 with Stainless Steel Hardware would be ZTC-14-0N4-SS.

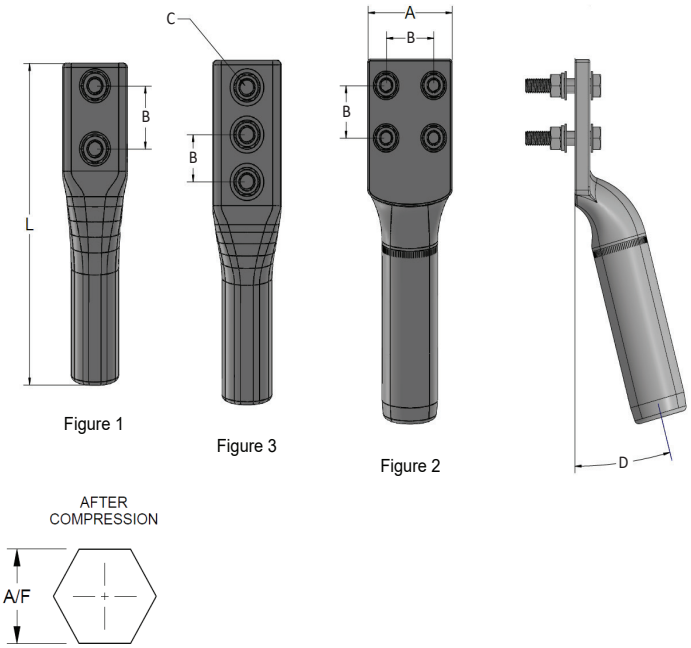

Figure 1 Figure 3 Figure 2

Part Number	Figure	Cable Size	Dimensions in (mm)					D (Angle)	Compression Die
		in (mm)	A	B	C	L	A/F		
ZTC-14-0N4	2	0.551 - 0.630 (14.0 - 16.0)	3.00 (76)	1.75 (44)	0.56 (14)	8.98 (228)	1.102 (28)	0	DC-28
ZTC-16-0N2	1	0.551 - 0.630 (14.0 - 16.0)	2.00 (51)	1.75 (44)	0.56 (14)	8.98 (228)	1.063 (27)	0	DC-27
ZTC-18-0N2	1	0.630 - 0.709 (16.0 - 18.0)	2.00 (51)	1.75 (44)	0.56 (14)	9.13 (232)	1.142 (29)	0	DC-29
ZTC-18-15N2	1	0.630 - 0.709 (16.0 - 18.0)	2.00 (51)	1.75 (44)	0.56 (14)	9.13 (232)	1.142 (29)	15	DC-29
ZTC-22-15N2	1	0.787 - 0.866 (20.0 - 22.0)	2.00 (51)	1.75 (44)	0.56 (14)	9.61 (244)	1.252 (31.8)	15	DC-32
ZTC-22-15N4	2	0.787 - 0.866 (20.0 - 22.0)	3.00 (76)	1.75 (44)	0.56 (14)	9.61 (244)	1.252 (31.8)	15	DC-32
ZTC-22-15N4HT	2	0.787 - 0.866 (20.0 - 22.0)	3.87 (98)	1.75 (44)	0.56 (14)	16.50 (419)	1.252 (31.8)	15	DC-32
ZTC-24-15N2	1	0.866 - 0.945 (22.0 - 24.0)	2.00 (51)	1.75 (44)	0.56 (14)	10.00 (254)	1.457 (37)	15	DC-37
ZTC-28-0N4	2	1.102 - 1.161 (28.0 - 29.5)	3.00 (76)	1.75 (44)	0.56 (14)	11.34 (288)	1.496 (38)	0	DC-38
ZTC-28-0N4HT	2	1.102 - 1.161 (28.0 - 29.5)	3.00 (76)	1.75 (44)	0.56 (14)	15.91 (404)	1.496 (38)	0	DC-38
ZTC-28-15N2	1	1.102 - 1.161 (28.0 - 29.5)	2.75 (70)	1.75 (44)	0.56 (14)	12.01 (305)	1.496 (38)	15	DC-38
ZTC-28-15N3	3	1.102 - 1.161 (28.0 - 29.5)	2.75 (70)	1.75 (44)	0.56 (14)	12.01 (305)	1.496 (38)	15	DC-38
ZTC-28-15N4	2	1.102 - 1.161 (28.0 - 29.5)	3.00 (76)	1.75 (44)	0.56 (14)	11.34 (288)	1.496 (38)	15	DC-38
ZTC-28-15N4HT	2	1.102 - 1.161 (28.0 - 29.5)	3.00 (76)	1.75 (44)	0.56 (14)	15.91 (404)	1.496 (38)	15	DC-38
ZTC-30-15N4	2	1.161 - 1.181 (29.5 - 30.0)	3.00 (76)	1.75 (44)	0.56 (14)	11.34 (288)	1.693 (43)	15	DC-43
ZTC-32-0N4	2	1.181 - 1.260 (30.0 - 32.0)	3.00 (76)	1.75 (44)	0.56 (14)	11.34 (288)	1.760 (44.7)	0	DC-44
ZTC-32-0N4HT	2	1.181 - 1.260 (30.0 - 32.0)	3.00 (76)	1.75 (44)	0.56 (14)	15.91 (404)	1.760 (44.7)	0	DC-44

ZTC CONTINUED

Aluminum Compression Terminal Cable to Pad 230kV and Below

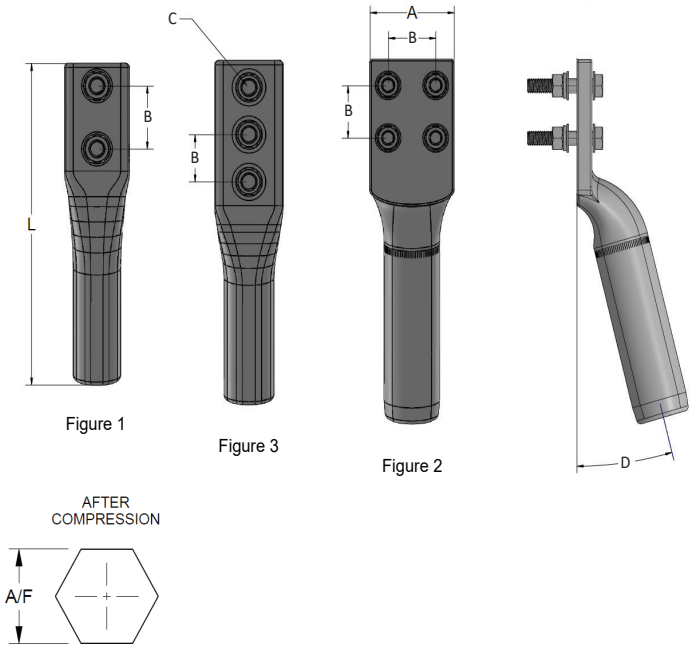

Part Number	Figure	Cable Size	Dimensions in (mm)					D (Angle)	Compression Die
		in (mm)	A	B	C	L	A/F		
ZTC-32-15N3	3	1.181 - 1.260 (30.0 - 32.0)	2.75 (70)	1.75 (44)	0.56 (14)	13.31 (338)	1.732 (44)	15	DC-44
ZTC-32-15N4	2	1.181 - 1.260 (30.0 - 32.0)	3.00 (76)	1.75 (44)	0.56 (14)	11.34 (288)	1.732 (44)	15	DC-44
ZTC-32-15N4HT	2	1.181 - 1.260 (30.0 - 32.0)	3.00 (76)	1.75 (44)	0.56 (14)	15.91 (404)	1.732 (44)	15	DC-44
ZTC-33-15N4	2	1.260 - 1.339 (32.0 - 34.0)	3.00 (76)	1.75 (44)	0.56 (14)	16.14 (410)	1.732 (44)	15	DC-44
ZTC-36-0N2	1	1.339 - 1.417 (34.0 - 36.0)	3.00 (76)	1.75 (44)	0.56 (14)	10.00 (254)	1.850 (47)	0	DC-47
ZTC-36-15N2	1	1.339 - 1.417 (34.0 - 36.0)	3.00 (76)	1.75 (44)	0.56 (14)	10.51 (267)	1.850 (47)	15	DC-47
ZTC-40-0N2	1	1.496 - 1.575 (38.0 - 40.0)	3.25 (83)	1.75 (44)	0.56 (14)	11.22 (285)	2.165 (55)	0	DC-55

SECTION 2

COUPLERS

SUBSTATION CONNECTORS - 230KV AND BELOW

COUPLERS

PLP **Substation Connectors Couplers** for 230kV and below are designed for connecting two ends of bus tube or stranded conductor. All contact faces are manufactured to maximize contact surface area and provide a superior installed fit.

FEATURES AND BENEFITS

- Complete range of sizes for connecting most standard bus tube or stranded conductor
- Solutions for bolted, compression, and weldment applications
- Available in aluminum and bronze, with tin plating capabilities for both materials
- Custom design solutions available to secure your most challenging connections

HE-A

Aluminum Bolted Coupler
Straight Tube to Tube
230kV and Below

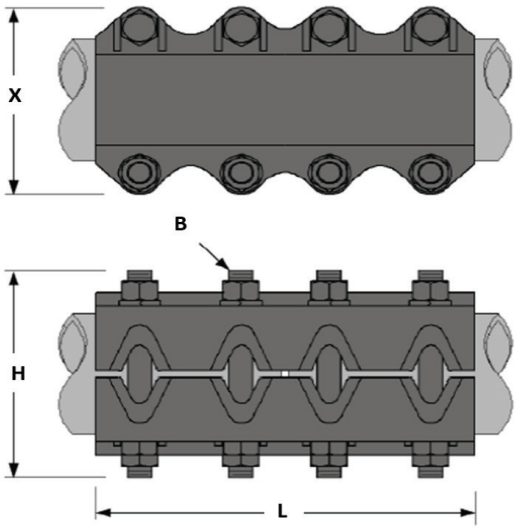

Aluminum alloy coupler to connect two bus tubes of the same diameter. Electrical joint compound is recommended for all tube contact surfaces.

CASTINGS: Aluminum Alloy

HARDWARE: Galvanized Steel

See page 136 for special order options such as tin plating, hardware materials and specific angles. Contact PLP for further details, unlisted option and/or special applications.

Example: HE36A36A with Stainless Steel Hardware would be HE36A36A-SS

Part Number	NPS Tube Diameter	Dimensions in (mm)			
	in (mm)	H	L	B	X
HE36A36A	1/2 (13)	3.07 (78)	6.26 (159)	1/2 (13)	2.60 (66)
HE37A37A	3/4 (19)	3.82 (97)	6.85 (174)	1/2 (13)	2.80 (71)
HE38A38A	1 (25)	3.82 (97)	7.24 (184)	1/2 (13)	3.07 (78)
HE39A39A	1-1/4 (32)	3.23 (82)	7.76 (197)	1/2 (13)	3.43 (87)
HE40A40A	1-1/2 (38)	4.13 (105)	8.46 (215)	1/2 (13)	3.78 (96)
HE41A41A	2 (51)	5.00 (127)	8.98 (228)	5/8 (16)	4.53 (115)
HE42A42A	2-1/2 (64)	5.83 (148)	9.41 (239)	5/8 (16)	5.00 (127)
HE43A43A	3 (76)	6.30 (160)	9.96 (253)	5/8 (16)	5.43 (138)
HE44A44A	3-1/2 (89)	5.91 (150)	11.30 (287)	5/8 (16)	6.14 (156)
HE45A45A	4 (102)	6.50 (165)	12.24 (311)	5/8 (16)	6.69 (170)
HE46A46A	4-1/2 (114)	6.38 (162)	13.43 (341)	5/8 (16)	7.17 (182)
HE47A47A	5 (127)	6.97 (177)	14.45 (367)	5/8 (16)	7.72 (196)
HE49A49A	6 (152)	8.39 (213)	16.42 (417)	5/8 (16)	8.78 (223)

HL-A

Aluminum Bolted Coupler 90-Degree Tube to Tube 230kV and Below

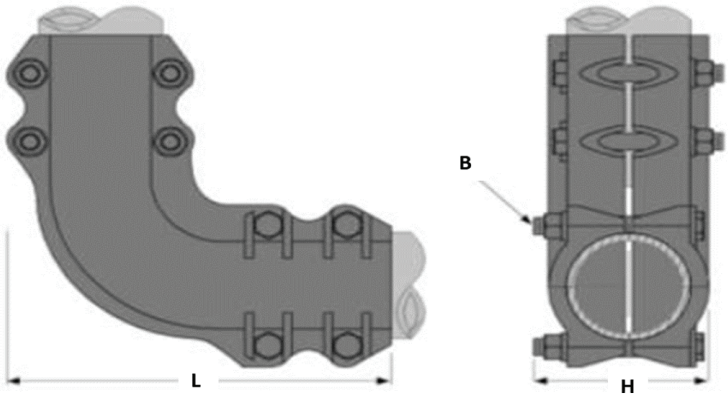

Aluminum alloy coupler to connect two bus tubes of the same diameter. Electrical joint compound is recommended for all tube contact surfaces.

Different angles available upon special request.

CASTINGS: Aluminum Alloy

HARDWARE: Galvanized Steel

See page 136 for special order options such as tin plating, hardware materials and specific angles. Contact PLP for further details, unlisted option and/or special applications.

Example: HL37A37A with Stainless Steel Hardware would be HL37A37A-SS

Part Number	NPS Tube Diameter	Dimensions in (mm)		
	in (mm)	H	L	B
HL37A37A	3/4 (19)	3.31 (84)	5.91 (150)	1/2 (13)
HL38A38A	1 (25)	3.31 (84)	6.57 (167)	1/2 (13)
HL39A39A	1-1/4 (32)	2.95 (75)	7.09 (180)	1/2 (13)
HL40A40A	1-1/2 (38)	3.78 (96)	7.68 (195)	1/2 (13)
HL41A41A	2 (51)	4.41 (112)	9.06 (230)	5/8 (16)
HL42A42A	2-1/2 (64)	4.80 (122)	9.72 (247)	5/8 (16)
HL43A43A	3 (76)	5.43 (138)	10.39 (264)	5/8 (16)
HL44A44A	3-1/2 (89)	5.59 (142)	11.65 (296)	5/8 (16)
HL45A45A	4 (102)	6.18 (157)	12.76 (324)	5/8 (16)
HL46A46A	4-1/2 (114)	6.38 (162)	13.50 (343)	5/8 (16)
HL47A47A	5 (127)	6.97 (177)	14.33 (364)	5/8 (16)
HL49A49A	6 (152)	8.39 (213)	16.38 (416)	5/8 (16)

HL-A

Aluminum Bolted Coupler 90-Degree Cable to Cable 230kV and Below

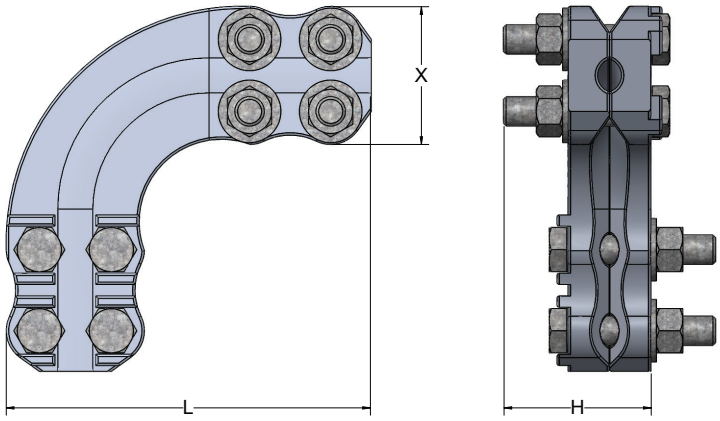

Aluminum alloy 90-degree coupler to connect two cables of the same diameter. Electrical joint compound is recommended for all cable contact surfaces. Different angles available upon special request.

CASTINGS: Aluminum Alloy

HARDWARE: Galvanized Steel

See page 136 for special order options such as tin plating, hardware materials and specific angles. Contact PLP for further details, unlisted option and/or special applications.

Example: HL14A14A with Stainless Steel Hardware would be HL14A14A-SS.

Part Number	Cable AWG/MCM				Dimensions		
	AAC	AAC Diameter	ACSR	ACSR Diameter	in (mm)		
		in (mm)		in (mm)	H	L	X
HL14A14A	250 - 266	0.575 - 0.593 (14.6 - 15.1)	4/0 (6/1) - 203 (16/19)	0.563 - 0.714 (14.3 - 18.1)	2.52 (64)	5.00 (127)	2.36 (60)
HL17A17A	397 - 400	0.724 - 0.728 (18.4 - 18.5)	203 (16/19) - 336 (30/7)	0.714 - 0.741 (18.1 - 18.8)	2.83 (72)	5.98 (152)	2.68 (68)
HL19A19A	450 - 500	0.772 - 0.814 (19.6 - 20.7)	397 (24/7) - 477 (18/1)	0.772 - 0.814 (19.6 - 20.7)	2.83 (72)	5.98 (152)	2.68 (68)
HL21A21A	550 - 600	0.855 - 0.893 (21.7 - 22.7)	477 (30/7)	0.883 (22.4)	2.83 (72)	5.98 (152)	2.68 (68)
HL28A28A	900 - 1000	1.094 - 1.209 (27.8 - 30.7)	795 (24/7) - 874 (54/7)	1.092 - 1.146 (27.7 - 29.1)	3.31 (84)	6.77 (172)	3.19 (81)
HL29A29A	1192 - 1351	1.259 - 1.340 (32.0 - 34.0)	1033 (54/7) - 1192 (45/7)	1.245 - 1.302 (31.6 - 33.1)	3.31 (84)	6.77 (172)	3.19 (81)

HHE-A

Aluminum Bolted Coupler Straight Tube to Tube Reducer 230kV and Below

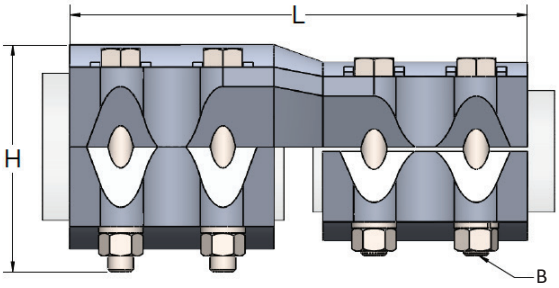

Aluminum alloy straight coupler to connect aluminum bus tubes of different diameter. Electrical joint compound is recommended for all tube contact surfaces.

CASTINGS: Aluminum Alloy

HARDWARE: Galvanized Steel

See page 136 for special order options such as tin plating, hardware materials and specific angles. Contact PLP for further details, unlisted option and/or special applications.

Example: HHE39A37A with Stainless Steel Hardware would be HHE39A37A-SS.

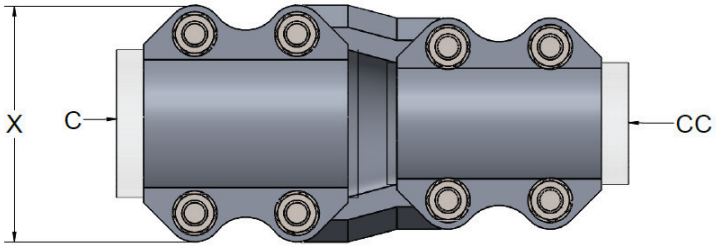

Part Number	Main (C) NPS Tube Diameter	Tap (CC) NPS Tube Diameter	Dimensions in (mm)			
	in (mm)	in (mm)	H	L	B	X
HHE39A37A	1-1/4 (32)	3/4 (19)	2.95 (75)	7.32 (186)	1/2 (13)	3.27 (83)
HHE40A39A	1-1/2 (38)	1-1/4 (32)	3.78 (96)	8.03 (204)	1/2 (13)	3.70 (94)
HHE41A38A	2 (51)	1 (25)	3.78 (96)	7.76 (197)	1/2 (13)	4.13 (105)
HHE41A40A	2 (51)	1-1/2 (38)	3.78 (96)	8.35 (212)	1/2 (13)	4.13 (105)
HHE42A38A	2-1/2 (64)	1 (25)	4.33 (110)	7.76 (197)	1/2 (13)	4.61 (117)
HHE42A39A	2-1/2 (64)	1-1/4 (32)	4.33 (110)	8.00 (203)	1/2 (13)	4.61 (117)
HHE42A41A	2-1/2 (64)	2 (51)	4.84 (123)	8.98 (228)	5/8 (16)	5.00 (127)
HHE43A39A	3 (76)	1-1/4 (32)	5.43 (138)	8.00 (203)	1/2 (13)	5.24 (133)
HHE43A41A	3 (76)	2 (51)	5.43 (138)	9.45 (240)	5/8 (16)	5.55 (141)
HHE43A42A	3 (76)	2-1/2 (64)	5.43 (138)	9.65 (245)	5/8 (16)	5.55 (141)
HHE44A43A	3-1/2 (89)	3 (76)	5.59 (142)	10.67 (271)	5/8 (16)	6.14 (156)
HHE45A42A	4 (102)	2-1/2 (64)	6.18 (157)	10.79 (274)	5/8 (16)	6.69 (170)
HHE45A43A	4 (102)	3 (76)	6.18 (157)	11.50 (292)	5/8 (16)	6.69 (170)
HHE45A44A	4 (102)	3-1/2 (89)	6.18 (157)	11.69 (297	5/8 (16)	6.69 (170)
HHE46A45A	4-1/2 (114)	4 (102)	6.38 (162)	12.17 (309)	5/8 (16)	7.17 (182)

HHE-A

Aluminum Bolted Coupler Straight Tube to Cable 230kV and Below

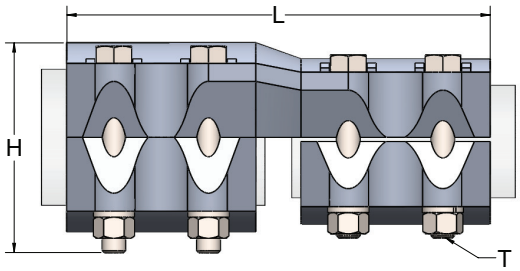

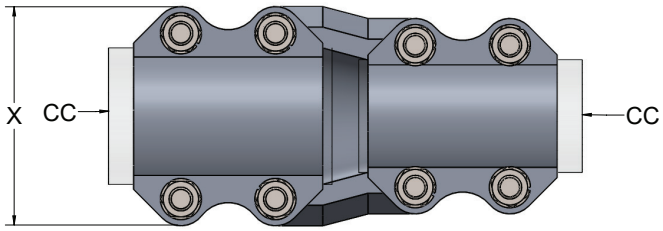

Aluminum alloy straight coupler to connect one bus tube to one cable. Electrical joint compound is recommended for all tube/cable contact surfaces.

CASTINGS: Aluminum Alloy

HARDWARE: Galvanized Steel

See page 136 for special order options such as tin plating, hardware materials and specific angles. Contact PLP for further details, unlisted option and/or special applications.

Example: HHE40A17A with Stainless Steel Hardware would be HHE40A17A-SS.

Part Number	Main (C) NPS Tube Diameter	Cable (CC) AWG/MCM				Dimensions		
		AAC	AAC Diameter	ACSR	ACSR Diameter	in (mm)		
	in (mm)		in (mm)		in (mm)	H	L	X
HHE40A17A	1-1/2 (38)	397 - 400	0.724 - 0.728 (18.3 - 18.5)	203 (16/19) - 336 (30/7)	0.714 - 0.720 (18.1 - 18.3)	3.86 (98)	7.48 (190)	3.66 (93)
HHE42A29A	2-1/2 (64)	1192 - 1351	1.258 - 1.340 (32.0 - 34.0)	1033 (54/7) - 1192 (54/19)	1.245 - 1.338 (31.6 - 34.0)	4.37 (111)	7.72 (196)	4.61 (117)
HHE43A28A	3 (76)	900 - 1000	1.094 - 1.152 (27.8 - 29.3)	795 (24/7) - 874 (54/7)	1.092 - 1.146 (27.7 - 29.1)	4.88 (124)	7.91 (201)	5.35 (136)
HHE43A285A	3 (76)	1033 - 1113	1.172 - 1.216 (29.8 - 30.9)	900 (54/7) - 954 (54/7)	1.162 - 1.196 (29.5 - 30.4)	4.88 (124)	7.91 (201)	5.35 (136)
HHE43A29A	3 (76)	1192 - 1351	1.259 - 1.340 (32.0 - 34.0)	1033 (54/7) - 1192 (45/7)	1.245 - 1.302 (31.6 - 33.1)	4.88 (124)	7.91 (201)	5.35 (136)

EHHE-A

Aluminum Bolted Coupler Straight Cable to Cable 230kV and Below

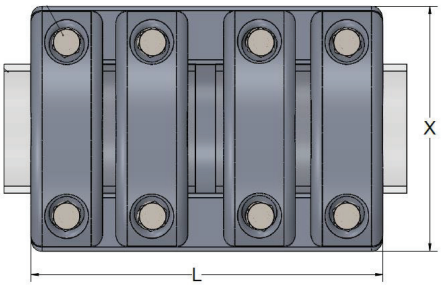

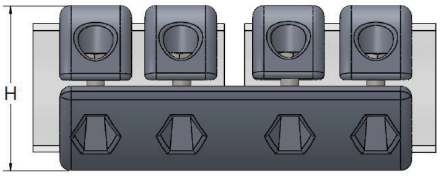

Aluminum alloy straight coupler to connect two cables of the same diameter. Electrical joint compound is recommended for all cable contact surfaces.

CASTINGS: Aluminum Alloy

HARDWARE: Galvanized Steel

See page 136 for special order options such as tin plating, hardware materials and specific angles. Contact PLP for further details, unlisted option and/or special applications.

Example: EHHE28A28A with Stainless Steel Hardware would be EHHE28A28A-SS.

Part Number	Cable AWG/MCM				Dimensions		
	AAC	AAC Diameter	ACSR	ACSR Diameter	in (mm)		
		in (mm)		in (mm)	H	L	X
EHHE28A28A	900 - 1000	1.094 - 1.152 (27.8 - 29.3)	795 (54/7) - 945 (45/7)	1.092 - 1.165 (27.7 - 29.6)	2.56 (65)	8.27 (210)	4.65 (118)
EHHE29A29A	1192 - 1300	1.258 - 1.315 (32.0 - 33.4)	1033 (54/7) - 1192 (54/19)	1.245 - 1.338 (31.6 - 33.9)	2.56 (65)	8.27 (210)	4.65 (118)

ERC

Aluminum Compression Coupler Straight Cable to Cable 230kV and Below

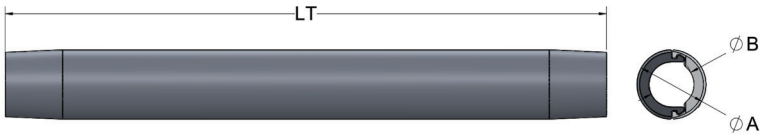

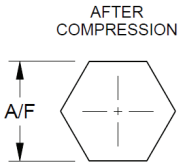

Aluminum alloy compression coupler for connecting straight cable to cable. Electrical joint compound is recommended for all cable contact surfaces.

CASTINGS: Aluminum Alloy

See page 136 for special order options such as tin plating, hardware materials and specific angles. Contact PLP for further details, unlisted option and/or special applications.

Part Number	Cable Size	Dimensions in (mm)				Compression Die
	in (mm)	A	B	LT	A/F	
ERC-22	0.787 - 0.905 (20.0 - 23.0)	1.46 (37)	0.91 (23)	14.00 (356)	1.244 (31.6)	DC-32
ERC-28	1.023 - 1.165 (26.0 - 29.6)	1.81 (46)	1.18 (30)	15.00 (381)	1.575 (40.0)	DC-40
ERC-32	1.181 - 1.299 (30.0 - 33.0)	2.05 (52)	1.34 (34)	15.75 (400)	1.732 (44.0)	DC-44
ERC-22HT	0.787 - 0.905 (20.0 - 23.0)	1.46 (37)	0.91 (23)	22.00 (559)	1.244 (31.6)	DC-32
ERC-28HT	1.023 - 1.165 (26.0 - 29.6)	1.81 (46)	1.18 (30)	24.00 (610)	1.575 (40.0)	DC-40
ERC-32HT	1.181 - 1.299 (30.0 - 33.0)	2.05 (52)	1.34 (34)	24.00 (610)	1.732 (44.0)	DC-44

CE

Bronze Bolted Coupler
Straight Cable to Cable, Eyebolt
230kV and Below

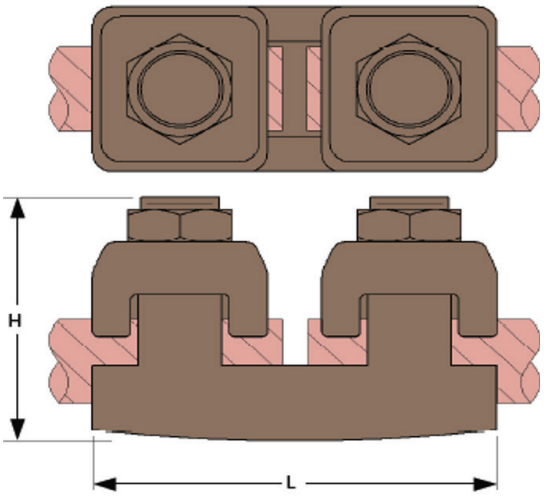

Copper alloy coupler to connect two copper cables of the same diameter. Electrical joint compound is recommended for all cable contact surfaces.

CASTINGS: Copper Alloy

HARDWARE: Silicone Bronze

See page 136 for special order options such as tin plating, hardware materials and specific angles. Contact PLP for further details, unlisted option and/or special applications.

Part Number	Cable AWG/MCM	Dimensions in (mm)	
		H	L
CE8T	14S-8T(*)	0.83 (21)	1.69 (43)
CE4T	6S-4T(*)	0.83 (21)	1.69 (43)
CE1T	4T-1T(*)	1.06 (27)	1.93 (49)
CE20	1/0T-2/0T(*)	1.26 (32)	2.13 (54)
CE40	3/0T-4/0T(*)	1.57 (40)	2.44 (62)
CE350	250-350	1.77 (45)	2.72 (69)
CE500	400-500	2.17 (55)	3.11 (79)
CE800	600-800	2.56 (65)	3.50 (89)
CE1000	850-1000	2.68 (68)	3.90 (99)

*S denotes SOLID wire, and T denotes STRANDED wire

HE

Bronze Bolted Coupler Straight Tube to Tube 230kV and Below

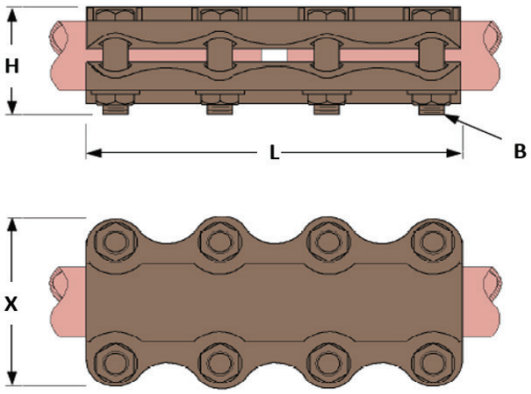

Copper alloy coupler to connect two bus tubes of the same diameter. Electrical joint compound is recommended for all tube contact surfaces.

Different angles available upon special request.

CASTINGS: Copper Alloy

HARDWARE: Silicone Bronze

See page 136 for special order options such as tin plating, hardware materials and specific angles. Contact PLP for further details, unlisted option and/or special applications.

Part Number	NPS Tube Diameter	Dimensions in (mm)			
	in (mm)	H	L	B	X
HE3434	1/4 (6)	1.54 (39)	3.03 (77)	3/8 (10)	2.13 (54)
HE3636	1/2 (13)	1.69 (43)	4.02 (102)	3/8 (10)	2.36 (60)
HE3737	3/4 (19)	1.77 (45)	4.25 (108)	3/8 (10)	2.48 (63)
HE3838	1 (25)	1.89 (48)	4.25 (108)	3/8 (10)	2.87 (73)
HE3939	1-1/4 (32)	2.60 (66)	5.87 (149)	1/2 (13)	3.58 (91)
HE4040	1-1/2 (38)	2.64 (67)	5.71 (145)	1/2 (13)	3.90 (99)
HE4141	2 (51)	3.03 (77)	5.71 (145)	1/2 (13)	4.69 (119)
HE4242	2-1/2 (64)	3.70 (94)	5.71 (145)	1/2 (13)	5.28 (134)
HE4343	3 (76)	4.33 (110)	7.20 (183)	5/8 (16)	6.14 (156)
HE4444	3-1/2 (89)	4.96 (126)	7.20 (183)	5/8 (16)	6.89 (175)
HE4545	4 (102)	5.63 (143)	8.50 (216)	5/8 (16)	7.40 (188)
HE4646	4-1/2 (114)	5.98 (152)	8.78 (223)	5/8 (16)	8.00 (203)
HE4747	5 (127)	6.61 (168)	8.78 (223)	5/8 (16)	8.50 (216)

HE

Bronze Bolted Coupler Straight Tube to Cable 230kV and Below

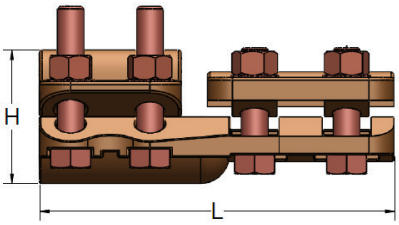

Copper alloy straight coupler to connect one bus tube to one cable. Electrical joint compound is recommended for all tube/cable contact surfaces.

CASTINGS: Copper Alloy

HARDWARE: Silicone Bronze

See page 136 for special order options such as tin plating, hardware materials and specific angles. Contact PLP for further details, unlisted option and/or special applications.

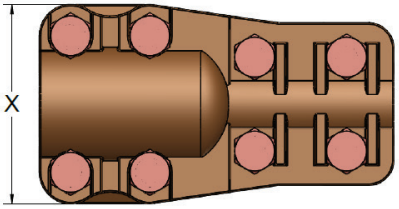

Part Number	Main NPS Tube Diameter	Tap Cable AWG/MCM	Cable Diameter	Dimensions in (mm)		
	in (mm)		in (mm)	H	L	X
HE3813	1 (25)	4/0T*	0.528 (13.4)	1.89 (48)	4.33 (110)	2.87 (73)
HE3814	1 (25)	250	0.575 (14.6)	1.89 (48)	4.33 (110)	2.87 (73)
HE3819	1 (25)	500	0.814 (20.7)	1.89 (48)	4.33 (110)	2.87 (73)
HE4324	1 (25)	750	0.998 (25.3)	4.21 (107)	4.80 (122)	5.51 (140)

*S denotes solid wire, and T denotes standard wire.

HE

Bronze Bolted Coupler Straight Cable to Cable 230kV and Below

Copper alloy straight coupler to connect two cables. Electrical joint compound is recommended for all cable contact surfaces.

CASTINGS: Copper Alloy

HARDWARE: Silicone Bronze

See page 136 for special order options such as tin plating, hardware materials and specific angles. Contact PLP for further details, unlisted option and/or special applications.

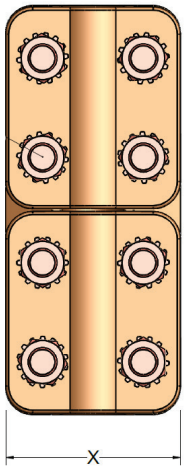

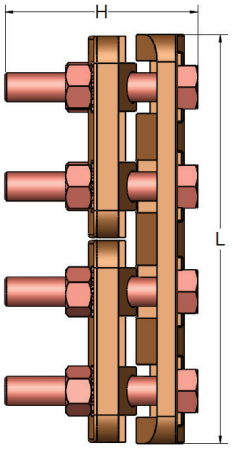

Part Number	Main Cable AWG/MCM	Main Cable Diameter	Tap Cable AWG/MCM	Tap Cable Diameter	Dimensions in (mm)		
				in (mm)	H	L	X
HE1916	500	0.814 (20.7)	350	0.681 (17.3)	1.77 (45)	4.76 (121)	2.40 (61)
HE1919	500	0.814 (20.7)	500	0.814 (20.7)	1.77 (45)	5.31 (135)	2.40 (61)
HE2424	750	0.998 (25.3)	750	0.998 (25.3)	2.28 (58)	5.67 (144)	2.40 (61)

SECTION 3

TEES

SUBSTATION CONNECTORS - 230KV AND BELOW

TEES

PLP **Substation Connectors Tees** for 230kV and below are designed to provide a simple means of making a tee connection between two conductors, bus or stranded. All contact faces are manufactured to maximize contact surface area and provide a superior installed fit. Tee connectors are suitable for both equal and unequal conductor combinations.

FEATURES AND BENEFITS

- Complete range of sizes for connecting most standard bus tube or stranded conductor
- Solutions for bolted, compression, and weldment applications
- Available in aluminum and bronze, with tin plating capabilities for both materials
- Custom design solutions available to secure your most challenging connections

HB-A

Aluminum Bolted Tee
Tube to Pad
230kV and Below

Aluminum alloy tee to connect a tube in the main to a flat pad. Electrical joint compound is recommended for all tube/flat contact surfaces.

CASTINGS: Aluminum Alloy

HARDWARE: Galvanized Steel

See page 136 for special order options such as tin plating, hardware materials and specific angles. Contact PLP for further details, unlisted option and/or special applications.

Example: HB37A-4N with Stainless Steel Hardware would be HB37A-4N-SS.

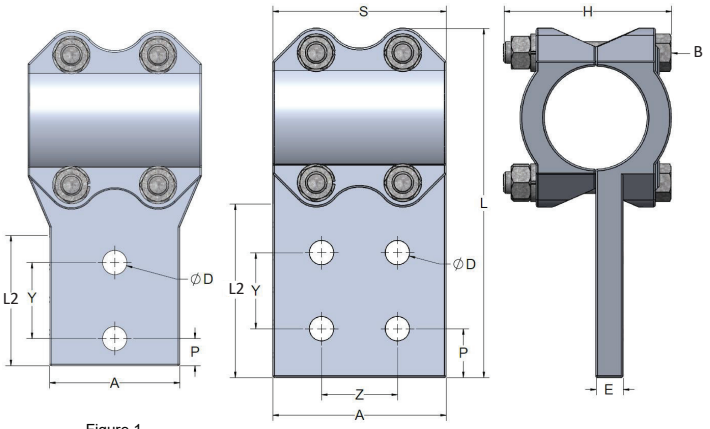

Figure 1 Figure 2

Part Number	Figure	Tube NPS Diameter in (mm)	Dimensions in (mm)									
			A	D	E	H	L	L2	P	S	B	Y/Z
HB37A-4N	2	3/4 (19)	3.00 (76)	0.56 (14.3)	0.39 (10)	3.31 (84)	6.06 (154)	3.00 (76)	0.63 (16)	3.31 (84)	1/2 (13)	1.75 (44)
HB38A-2N	1	1 (25)	2.50 (64)	0.56 (14.3)	0.51 (13)	3.31 (84)	6.30 (160)	3.00 (76)	0.63 (16)	3.58 (91)	1/2 (13)	1.75 (44)
HB38A-4N	2	1 (25)	3.00 (76)	0.56 (14.3)	0.51 (13)	3.31 (84)	6.30 (160)	3.00 (76)	0.63 (16)	3.58 (91)	1/2 (13)	1.75 (44)
HB39A-2N	1	1-1/4 (32)	2.50 (64)	0.56 (14.3)	0.51 (13)	2.95 (75)	6.89 (175)	3.00 (76)	0.63 (16)	3.74 (95)	1/2 (13)	1.75 (44)
HB39A-4N	2	1-1/4 (32)	3.00 (76)	0.56 (14.3)	0.51 (13)	2.95 (75)	6.89 (175)	3.00 (76)	0.63 (16)	3.74 (95)	1/2 (13)	1.75 (44)
HB39A-4N4	2	1-1/4 (32)	4.00 (102)	0.56 (14.3)	0.51 (13)	2.95 (75)	7.87 (200)	4.00 (102)	1.14 (29)	3.74 (95)	1/2 (13)	1.75 (44)
HB40A-2N	1	1-1/2 (38)	2.50 (64)	0.56 (14.3)	0.51 (13)	3.82 (97)	7.09 (180)	3.00 (76)	0.63 (16)	4.09 (104)	1/2 (13)	1.75 (44)
HB40A-4N	2	1-1/2 (38)	3.00 (76)	0.56 (14.3)	0.51 (13)	3.82 (97)	7.09 (180)	3.00 (76)	0.63 (16)	4.09 (104)	1/2 (13)	1.75 (44)
HB40A-4N4	2	1-1/2 (38)	4.00 (102)	0.56 (14.3)	0.51 (13)	3.82 (97)	8.07 (205)	4.00 (102)	1.14 (29)	4.09 (104)	1/2 (13)	1.75 (44)
HB41A-2N	1	2 (51)	3.00 (76)	0.56 (14.3)	0.63 (16)	4.41 (112)	7.72 (196)	3.00 (76)	0.63 (16)	4.29 (109)	5/8 (16)	1.75 (44)
HB41A-4N	2	2 (51)	3.00 (76)	0.56 (14.3)	0.63 (16)	4.41 (112)	7.72 (196)	3.00 (76)	0.63 (16)	4.29 (109)	5/8 (16)	1.75 (44)
HB41A-4N4	2	2 (51)	4.00 (102)	0.56 (14.3)	0.63 (16)	4.41 (112)	8.74 (222)	4.00 (102)	1.14 (29)	4.29 (109)	5/8 (16)	1.75 (44)
HB42A-2N	1	2-1/2 (64)	3.00 (76)	0.56 (14.3)	0.63 (16)	4.92 (125)	8.27 (210)	3.00 (76)	0.63 (16)	4.49 (114)	5/8 (16)	1.75 (44)
HB42A-4N	2	2-1/2 (64)	3.00 (76)	0.56 (14.3)	0.63 (16)	4.92 (125)	8.27 (210)	3.00 (76)	0.63 (16)	4.49 (114)	5/8 (16)	1.75 (44)
HB42A-4N4	2	2-1/2 (64)	4.00 (102)	0.56 (14.3)	0.63 (16)	4.92 (125)	9.29 (236)	4.00 (102)	1.14 (29)	4.49 (114)	5/8 (16)	1.75 (44)

HB-A CONTINUED

Aluminum Bolted Tee
Tube to Pad
230kV and Below

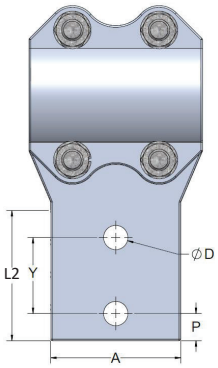

Figure 1

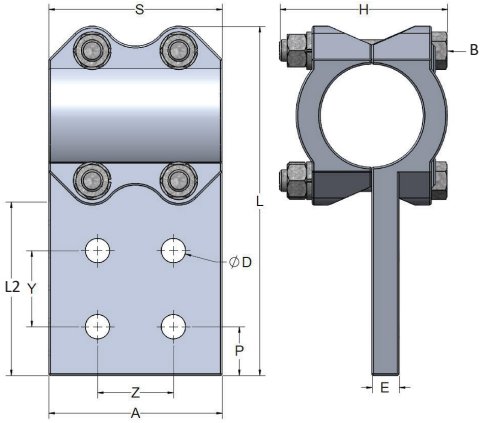

Figure 2

Part Number	Figure	Tube NPS Diameter	Dimensions									
		in (mm)	in (mm)									
			A	D	E	H	L	L2	P	S	B	Y/Z
HB43A-2N	1	3 (76)	3.00 (76)	0.56 (14.3)	0.67 (17)	5.35 (136)	8.82 (244)	3.00 (76)	0.63 (16)	5.00 (127)	5/8 (16)	1.75 (44)
HB43A-4N	2	3 (76)	3.00 (76)	0.56 (14.3)	0.67 (17)	5.35 (136)	8.82 (244)	3.00 (76)	0.63 (16)	5.00 (127)	5/8 (16)	1.75 (44)
HB43A-4N4	2	3 (76)	4.00 (102)	0.56 (14.3)	0.67 (17)	5.35 (136)	9.61 (244)	4.00 (102)	1.14 (29)	5.00 (127)	5/8 (16)	1.75 (44)
HB44A-4N	2	3-1/2 (89)	3.75 (95)	0.56 (14.3)	0.67 (17)	5.35 (136)	10.35 (263)	3.00 (76)	0.63 (16)	5.51 (140)	5/8 (16)	1.75 (44)
HB44A-4N4	2	3-1/2 (89)	4.00 (102)	0.56 (14.3)	0.67 (17)	5.35 (136)	10.35 (263)	4.00 (102)	1.14 (29)	5.51 (140)	5/8 (16)	1.75 (44)
HB45A-2N	1	4 (102)	3.75 (95)	0.56 (14.3)	0.67 (17)	6.18 (157)	10.16 (258)	3.00 (76)	0.63 (16)	5.98 (152)	5/8 (16)	1.75 (44)
HB45A-4N	2	4 (102)	3.75 (95)	0.56 (14.3)	0.67 (17)	6.18 (157)	10.16 (258)	3.00 (76)	0.63 (16)	5.98 (152)	5/8 (16)	1.75 (44)
HB45A-4N4	2	4 (102)	4.00 (102)	0.56 (14.3)	0.67 (17)	6.18 (157)	11.18 (284)	4.00 (102)	1.14 (29)	5.98 (152)	5/8 (16)	1.75 (44)

HBR-A

Aluminum Bolted Tee
Cable to Pad
230kV and Below

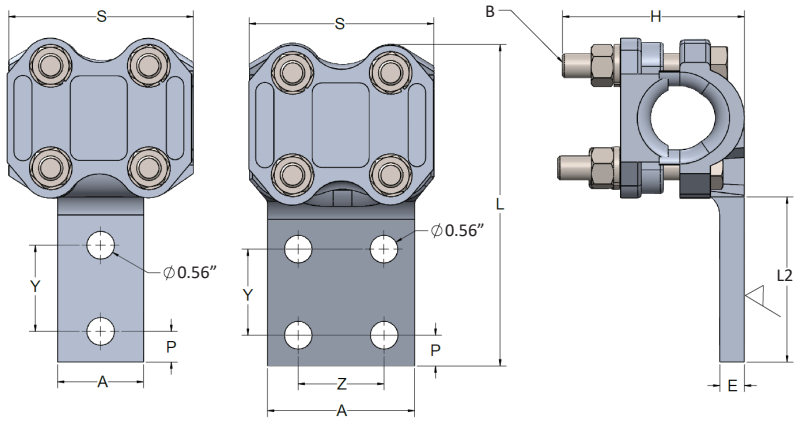

Aluminum alloy tee to connect a cable in the main to a flat pad. Electrical joint compound is recommended for all cable/flat contact surfaces.

CASTINGS: Aluminum Alloy

HARDWARE: Galvanized Steel

See page 136 for special order options such as tin plating, hardware materials and specific angles. Contact PLP for further details, unlisted option and/or special applications.

Example: HBR14A-4N with Stainless Steel Hardware would be HBR14A-4N-SS.

Part Number	Figure	Cable AWG/MCM				Dimensions								
		AAC	AAC Diameter	ACSR	ACSR Diameter	in (mm)								
			in (mm)		in (mm)	A	E	H	L	L2	P	S	B	Y/Z
HBR14A-4N	2	1/0T - 250*	0.372 - 0.575 (9.4 - 14.6)	1/0 (6/1) - 4/0 (6/1)	0.398 - 0.563 (10.1 - 14.3)	3.00 (76)	0.35 (9)	2.28 (58)	5.75 (146)	3.00 (76)	0.63 (16)	2.83 (72)	1/2 (13)	1.75 (44)
HBR14A-4N4	2	1/0T - 250*	0.372 - 0.575 (9.4 - 14.6)	1/0 (6/1) - 4/0 (6/1)	0.398 - 0.563 (10.1 - 14.3)	4.00 (102)	0.35 (9)	2.28 (58)	6.73 (171)	4.00 (102)	1.14 (29)	2.83 (72)	1/2 (13)	1.75 (44)
HBR17A-4N	2	250 - 400	0.575 - 0.728 (14.6 - 18.5)	4/0 (6/1) - 397 (26/7)	0.563 - 0.783 (14.3 - 19.9)	3.00 (76)	0.39 (10)	2.87 (73)	5.79 (147)	3.00 (76)	0.63 (16)	3.11 (79)	1/2 (13)	1.75 (44)
HBR17A-4N4	2	250 - 400	0.575 - 0.728 (14.6 - 18.5)	4/0 (6/1) - 397 (26/7)	0.563 - 0.783 (14.3 - 19.9)	4.00 (102)	0.39 (10)	2.87 (73)	6.81 (173)	4.00 (102)	1.14 (29)	3.11 (79)	1/2 (13)	1.75 (44)
HBR21A-2N	1	350 - 600	0.681 - 0.893 (17.3 - 22.7)	336 (18/1) - 477 (30/7)	0.684 - 0.883 (17.4 - 22.4)	1.75 (44)	0.39 (10)	2.80 (71)	5.91 (150)	3.00 (76)	0.63 (16)	3.35 (85)	1/2 (13)	1.75 (44)
HBR21A-4N	2	350 - 600	0.681 - 0.893 (17.3 - 22.7)	336 (18/1) - 477 (30/7)	0.684 - 0.883 (17.4 - 22.4)	3.00 (76)	0.39 (10)	2.80 (71)	5.91 (150)	3.00 (76)	0.63 (16)	3.35 (85)	1/2 (13)	1.75 (44)
HBR21A-4N4	2	350 - 600	0.681 - 0.893 (17.3 - 22.7)	336 (18/1) - 477 (30/7)	0.684 - 0.883 (17.4 - 22.4)	4.00 (102)	0.39 (10)	2.80 (71)	6.89 (175)	4.00 (102)	1.14 (29)	3.35 (85)	1/2 (13)	1.75 (44)
HBR27A-2N	1	600 - 900	0.893 - 1.094 (22.7 - 27.8)	477 (30/7) - 795 (54/7)	0.883 - 1.093 (22.4 - 27.8)	2.00 (51)	0.51 (13)	3.15 (80)	6.46 (164)	3.00 (76)	0.63 (16)	3.66 (93)	1/2 (13)	1.75 (44)
HBR27A-4N	2	600 - 900	0.893 - 1.094 (22.7 - 27.8)	477 (30/7) - 795 (54/7)	0.883 - 1.093 (22.4 - 27.8)	3.00 (76)	0.51 (13)	3.15 (80)	6.46 (164)	3.00 (76)	0.63 (16)	3.66 (93)	1/2 (13)	1.75 (44)
HBR27A-4N4	2	600 - 900	0.893 - 1.094 (22.7 - 27.8)	477 (30/7) - 795 (54/7)	0.883 - 1.093 (22.4 - 27.8)	4.00 (102)	0.51 (13)	3.15 (80)	7.44 (164)	4.00 (102)	1.14 (29)	3.66 (93)	1/2 (13)	1.75 (44)
HBR29A-4N	2	900 - 1250	1.094 - 1.289 (27.8 - 32.7)	715 (30/19) - 1113 (54/19)	1.081 - 1.293 (27.5 - 32.8)	3.00 (76)	0.51 (13)	3.62 (92)	6.54 (166)	3.00 (76)	0.63 (16)	3.78 (96)	1/2 (13)	1.75 (44)
HBR29A-4N4	2	900 - 1250	1.094 - 1.289 (27.8 - 32.7)	715 (30/19) - 1113 (54/19)	1.081 - 1.293 (27.5 - 32.8)	4.00 (102)	0.51 (13)	3.62 (92)	7.56 (192)	4.00 (102)	1.14 (29)	3.78 (96)	1/2 (13)	1.75 (44)
HBR30A-4N	2	1250 - 1600	1.289 - 1.459 (32.7 - 37.1)	1113 (54/19) - 1431 (45/7)	1.293 - 1.427 (32.8 - 36.3)	3.00 (76)	0.55 (14)	3.46 (88)	7.05 (179)	3.00 (76)	0.63 (16)	4.61 (117)	5/8 (16)	1.75 (44)
HBR30A-4N4	2	1250 - 1600	1.289 - 1.459 (32.7 - 37.1)	1113 (54/19) - 1431 (45/7)	1.293 - 1.427 (32.8 - 36.3)	4.00 (102)	0.55 (14)	3.46 (88)	8.03 (204)	4.00 (102)	1.14 (29)	4.61 (117)	5/8 (16)	1.75 (44)
HBR32A-4N	2	1500 - 2000	1.412 - 1.632 (35.9 - 41.5)	1272 (54/19) - 1272 (54/19)	1.382 - 1.602 (35.1 - 40.7)	3.00 (76)	0.71 (18)	3.90 (99)	7.17 (182)	3.00 (76)	0.63 (16)	4.65 (118)	5/8 (16)	1.75 (44)
HBR32A-4N4	2	1500 - 2000	1.412 - 1.632 (35.9 - 41.5)	1272 (54/19) - 1272 (54/19)	1.382 - 1.602 (35.1 - 40.7)	4.00 (102)	0.71 (18)	3.90 (99)	8.19 (208)	4.00 (102)	1.14 (29)	4.65 (118)	5/8 (16)	1.75 (44)

*S denotes solid wire, and T denotes standard wire.

HHTR-A

Aluminum Bolted Tee Tube Main to Cable Tap 230kV and Below

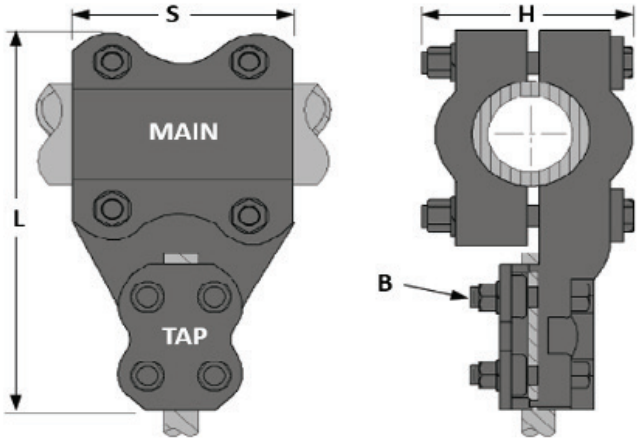

Aluminum alloy tee to connect tube in the main and cable in the tap. Electrical joint compound is recommended for all tube/cable contact surfaces.

CASTINGS: Aluminum Alloy

HARDWARE: Galvanized Steel

See page 136 for special order options such as tin plating, hardware materials and specific angles. Contact PLP for further details, unlisted option and/or special applications.

Example: HHTR37A14A with Stainless Steel Hardware would be HHTR37A14A-SS.

Part Number	NPS Tube Diameter	AAC	AAC Diameter	ACSR	ACSR Diameter	Dimensions in (mm)			
	in (mm)		in (mm)		in (mm)	H	L	S	B
HHTR37A14A	3/4 (19)	1/0T-250(*)	.372 - .575 (9.4 - 14.6)	1/0 (6/1) - 4/0 (6/1)	0.398 - 0.563 (10.1 - 14.3)	3.31 (84)	5.94 (151)	3.31 (84)	1/2 (13)
HHTR37A17A	3/4 (19)	250 - 400	0.575 - 0.728 (14.6 - 18.5)	4/0 (6/1) - 397 (26/7)	0.563 - 0.783 (14.3 - 19.9)	3.31 (84)	6.18 (157)	3.31 (84)	1/2 (13)
HHTR37A21A	3/4 (19)	350 - 600	0.681 - 0.893 (17.3 - 22.7)	336 (18/1) - 477 (30/7)	0.684 - 0.883 (17.4 - 22.4)	3.31 (84)	6.42 (163)	3.31 (84)	1/2 (13)
HHTR37A27A	3/4 (19)	600 - 900	0.893 - 1.094 (22.7 - 27.8)	477 (30/7) - 795 (54/7)	0.883 - 1.093 (22.4 - 27.8)	3.31 (84)	6.65 (169)	3.31 (84)	1/2 (13)
HHTR37A29A	3/4 (19)	900 - 1250	1.094 - 1.289 (27.8 - 32.7)	715 (30/19) - 1113 (54/19)	1.081 - 1.293 (27.5 - 32.8)	3.31 (84)	6.93 (176)	3.31 (84)	1/2 (13)
HHTR38A14A	1 (25)	1/0T - 250(*)	.372 - .575 (9.4 - 14.6)	1/0 (6/1) - 4/0 (6/1)	0.398 - 0.563 (10.1 - 14.3)	3.31 (84)	5.98 (152)	3.50 (89)	1/2 (13)
HHTR38A17A	1 (25)	250 - 400	0.575 - 0.728 (14.6 - 18.5)	4/0 (6/1) - 397 (26/7)	0.563 - 0.783 (14.3 - 19.9)	3.31 (84)	6.46 (164)	3.50 (89)	1/2 (13)
HHTR38A21A	1 (25)	350 - 600	0.681 - 0.893 (17.3 - 22.7)	336 (18/1) - 477 (30/7)	0.684 - 0.883 (17.4 - 22.4)	3.31 (84)	6.77 (172)	3.50 (89)	1/2 (13)
HHTR38A27A	1 (25)	600 - 900	0.893 - 1.094 (22.7 - 27.8)	477 (30/7) - 795 (54/7)	0.883 - 1.093 (22.4 - 27.8)	3.31 (84)	7.05 (179)	3.50 (89)	1/2 (13)
HHTR38A29A	1 (25)	900 - 1250	1.094 - 1.289 (27.8 - 32.7)	715 (30/19) - 1113 (54/19)	1.081 - 1.293 (27.5 - 32.8)	3.31 (84)	7.20 (183)	3.50 (89)	1/2 (13)
HHTR39A14A	1-1/4 (32)	1/0T - 250(*)	.372 - .575 (9.4 - 14.6)	1/0 (6/1) - 4/0 (6/1)	0.398 - 0.563 (10.1 - 14.3)	3.00 (76)	6.54 (166)	3.74 (95)	1/2 (13)
HHTR39A17A	1-1/4 (32)	250 - 400	0.575 - 0.728 (14.6 - 18.5)	4/0 (6/1) - 397 (26/7)	0.563 - 0.783 (14.3 - 19.9)	3.00 (76)	6.77 (172)	3.74 (95)	1/2 (13)
HHTR39A21A	1-1/4 (32)	350 - 600	0.681 - 0.893 (17.3 - 22.7)	336 (18/1) - 477 (30/7)	0.684 - 0.883 (17.4 - 22.4)	3.00 (76)	7.05 (179)	3.74 (95)	1/2 (13)
HHTR39A27A	1-1/4 (32)	600 - 900	0.893 - 1.094 (22.7 - 27.8)	477 (30/7) - 795 (54/7)	0.883 - 1.093 (22.4 - 27.8)	3.00 (76)	7.52 (191)	3.74 (95)	1/2 (13)
HHTR39A29A	1-1/4 (32)	900 - 1250	1.094 - 1.289 (27.8 - 32.7)	715 (30/19) - 1113 (54/19)	1.081 - 1.293 (27.5 - 32.8)	3.00 (76)	7.52 (191)	3.74 (95)	1/2 (13)
HHTR40A14A	1-1/2 (38)	1/0T - 250(*)	.372 - .575 (9.4 - 14.6)	1/0 (6/1) - 4/0 (6/1)	0.398 - 0.563 (10.1 - 14.3)	3.82 (97)	6.77 (172)	4.00 (102)	1/2 (13)
HHTR40A17A	1-1/2 (38)	250 - 400	0.575 - 0.728 (14.6 - 18.5)	4/0 (6/1) - 397 (26/7)	0.563 - 0.783 (14.3 - 19.9)	3.82 (97)	7.01 (178)	4.00 (102)	1/2 (13)
HHTR40A21A	1-1/2 (38)	350 - 600	0.681 - 0.893 (17.3 - 22.7)	336 (18/1) - 477 (30/7)	0.684 - 0.883 (17.4 - 22.4)	3.82 (97)	7.28 (185)	4.00 (102)	1/2 (13)

HHTR-A CONTINUED

Aluminum Bolted Tee Tube Main to Cable Tap 230kV and Below

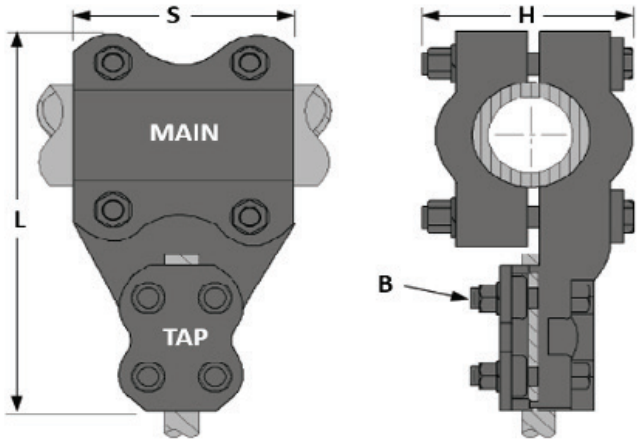

Part Number	NPS Tube Diameter	AAC	AAC Diameter	ACSR	ACSR Diameter	Dimensions in (mm)			
	in (mm)		in (mm)		in (mm)	H	L	S	B
HHTR40A27A	1-1/2 (38)	600 - 900	0.893 - 1.094 (22.7 - 27.8)	477 (30/7) - 795 (54/7)	0.883 - 1.093 (22.4 - 27.8)	3.82 (97)	7.52 (191)	4.00 (102)	1/2 (13)
HHTR40A29A	1-1/2 (38)	900 - 1250	1.094 - 1.289 (27.8 - 32.7)	715 (30/19) - 1113 (54/19)	1.081 - 1.293 (27.5 - 32.8)	3.82 (97)	7.76 (197)	4.00 (102)	1/2 (13)
HHTR41A14A	2 (51)	1/0T - 250(*)	.372 - .575 (9.4 - 14.6)	1/0 (6/1) - 4/0 (6/1)	0.398 - 0.563 (10.1 - 14.3)	4.33 (110)	7.24 (184)	4.00 (102)	1/2 (13)
HHTR41A17A	2 (51)	250 - 400	0.575 - 0.728 (14.6 - 18.5)	4/0 (6/1) - 397 (26/7)	0.563 - 0.783 (14.3 - 19.9)	4.33 (110)	7.48 (190)	4.00 (102)	1/2 (13)
HHTR41A21A	2 (51)	350 - 600	0.681 - 0.893 (17.3 - 22.7)	336 (18/1) - 477 (30/7)	0.684 - 0.883 (17.4 - 22.4)	4.33 (110)	7.76 (197)	4.00 (102)	1/2 (13)
HHTR41A27A	2 (51)	600 - 900	0.893 - 1.094 (22.7 - 27.8)	477 (30/7) - 795 (54/7)	0.883 - 1.093 (22.4 - 27.8)	4.33 (110)	8.11 (206)	4.00 (102)	1/2 (13)
HHTR41A29A	2 (51)	900 - 1250	1.094 - 1.289 (27.8 - 32.7)	715 (30/19) - 1113 (54/19)	1.081 - 1.293 (27.5 - 32.8)	4.33 (110)	8.27 (210)	4.00 (102)	1/2 (13)
HHTR41A30A	2 (51)	1250 - 1600	1.289 - 1.459 (32.7 - 37.1)	1113 (54/19) - 1431 (45/7)	1.293 - 1.427 (32.8 - 36.3)	4.41 (112)	9.37 (238)	4.29 (109)	5/8 (16)
HHTR42A14A	2-1/2 (64)	1/0T - 250(*)	.372 - .575 (9.4 - 14.6)	1/0 (6/1) - 4/0 (6/1)	0.398 - 0.563 (10.1 - 14.3)	4.33 (110)	7.76 (197)	4.00 (102)	1/2 (13)
HHTR42A17A	2-1/2 (64)	250 - 400	0.575 - 0.728 (14.6 - 18.5)	4/0 (6/1) - 397 (26/7)	0.563 - 0.783 (14.3 - 19.9)	4.33 (110)	7.99 (203)	4.00 (102)	1/2 (13)
HHTR42A21A	2-1/2 (64)	350 - 600	0.681 - 0.893 (17.3 - 22.7)	336 (18/1) - 477(30/7)	0.684 - 0.883 (17.4 - 22.4)	4.33 (110)	8.27 (210)	4.00 (102)	1/2 (13)
HHTR42A27A	2-1/2 (64)	600 - 900	0.893 - 1.094 (22.7 - 27.8)	477 (30/7) - 795 (54/7)	0.883 - 1.093 (22.4 - 27.8)	4.33 (110)	8.50 (216)	4.00 (102)	1/2 (13)
HHTR42A29A	2-1/2 (64)	900 - 1250	1.094 - 1.289 (27.8 - 32.7)	715 (30/19) - 1113 (54/19)	1.081 - 1.293 (27.5 - 32.8)	4.33 (110)	8.86 (225)	4.00 (102)	1/2 (13)
HHTR43A14A	3 (76)	1/0T - 250(*)	372 - .575 (9.4 - 14.6)	1/0 (6/1) - 4/0 (6/1)	0.398 - 0.563 (10.1 - 14.3)	5.00 (127)	8.43 (214)	4.00 (102)	1/2 (13)
HHTR43A17A	3 (76)	250 - 400	0.575 - 0.728 (14.6 - 18.5)	4/0 (6/1) - 397 (26/7)	0.563 - 0.783 (14.3 - 19.9)	5.00 (127)	8.62 (219)	4.00 (102)	1/2 (13)
HHTR43A21A	3 (76)	350 - 600	0.681 - 0.893 (17.3 - 22.7)	336 (18/1) - 477 (30/7)	0.684 - 0.883 (17.4 - 22.4)	5.00 (127)	8.86 (225)	4.00 (102)	1/2 (13)
HHTR43A27A	3 (76)	600 - 900	0.893 - 1.094 (22.7 - 27.8)	477 (30/7) - 795 (54/7)	0.883 - 1.093 (22.4 - 27.8)	5.00 (127)	9.13 (232)	4.00 (102)	1/2 (13)
HHTR43A29A	3 (76)	900 - 1250	1.094 - 1.289 (27.8 - 32.7)	715 (30/19) - 1113 (54/19)	1.081 - 1.293 (27.5 - 32.8)	5.00 (127)	9.13 (232)	4.00 (102)	1/2 (13)
HHTR43A30A	3 (76)	1250 - 1600	1.289 - 1.459 (32.7 - 37.1)	1113 (54/19) - 1431 (45/7)	1.293 - 1.427 (32.8 - 36.3)	5.00 (127)	10.59 (269)	5.00 (127)	5/8 (16)
HHTR44A14A	3-1/2 (89)	1/0T - 250(*)	0.372 - 0.575 (9.4 - 14.6)	1/0 (6/1) - 4/0 (6/1)	0.398 - 0.563 (10.1 - 14.3)	5.20 (132)	8.86 (225)	4.00 (102)	1/2 (13)

*S denotes SOLID wire, and T denotes STRANDED wire

HHTR-A CONTINUED

Aluminum Bolted Tee Tube Main to Cable Tap 230kV and Below

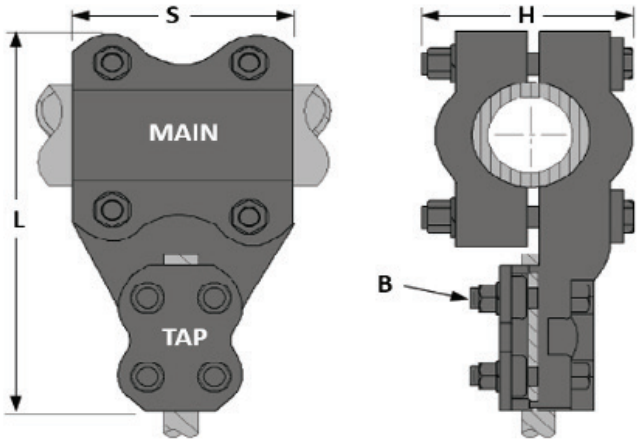

Part Number	NPS Tube Diameter	AAC	AAC Diameter	ACSR	ACSR Diameter	Dimensions in (mm)			
	in (mm)		in (mm)		in (mm)	H	L	S	B
HHTR44A17A	3-1/2 (89)	250 - 400	0.575 - 0.728 (14.6 - 18.5)	4/0 (6/1) - 397 (26/7)	0.563 - 0.783 (14.3 - 19.9)	5.20 (132)	9.21 (234)	4.00 (102)	1/2 (13)
HHTR44A21A	3-1/2 (89)	350 - 600	0.681 - 0.893 (17.3 - 22.7)	336 (18/1) - 477 (30/7)	0.684 - 0.883 (17.4 - 22.4)	5.20 (132)	9.37 (238)	4.00 (102)	1/2 (13)
HHTR44A27A	3-1/2 (89)	600 - 900	0.893 - 1.094 (22.7 - 27.8)	477 (30/7) - 795 (54/7)	0.883 - 1.093 (22.4 - 27.8)	5.20 (132)	9.61 (244)	4.00 (102)	1/2 (13)
HHTR44A29A	3-1/2 (89)	900 - 1250	1.094 - 1.289 (27.8 - 32.7)	715 (30/19) - 1113 (54/19)	1.081 - 1.293 (27.5 - 32.8)	5.20 (132)	9.88 (251)	4.00 (102)	1/2 (13)
HHTR45A14A	4 (102)	1/0T - 250(*)	0.372 - 0.575 (9.4 - 14.6)	1/0 (6/1) - 4/0 (6/1)	0.398 - 0.563 (10.1 - 14.3)	5.87 (149)	9.37 (238)	4.00 (102)	1/2 (13)
HHTR45A17A	4 (102)	250 - 400	0.575 - 0.728 (14.6 - 18.5)	4/0 (6/1) -397 (26/7)	0.563 - 0.783 (14.3 - 19.9)	5.87 (149)	9.61 (244)	4.00 (102)	1/2 (13)
HHTR45A21A	4 (102)	350 - 600	0.681 - 0.893 (17.3 - 22.7)	336 (18/1) - 477 (30/7)	0.684 - 0.883 (17.4 - 22.4)	5.87 (149)	9.88 (251)	4.00 (102)	1/2 (13)
HHTR45A27A	4 (102)	600 - 900	0.893 - 1.094 (22.7 - 27.8)	477 (30/7) - 795 (54/7)	0.883 - 1.093 (22.4 - 27.8)	5.87 (149)	10.12 (257)	4.00 (102)	1/2 (13)
HHTR45A29A	4 (102)	900 - 1250	1.094 - 1.289 (27.8 - 32.7)	715 (30/19) - 1113 (54/19)	1.081 - 1.293 (27.5 - 32.8)	5.87 (149)	10.35 (263)	4.00 (102)	1/2 (13)
HHTR45A30A	4 (102)	1250 - 1600	1.289 - 1.459 (32.7 - 37.1)	1113 (54/19) - 1431 (45/7)	1.293 - 1.427 (32.8 - 36.3)	6.18 (157)	11.46 (291)	5.98 (152)	5/8 (16)
HHTR46A21A	4-1/2 (114)	350 - 600	0.681 - 0.893 (17.3 - 22.7)	336 (18/1) - 477 (30/7)	0.684 - 0.883 (17.4 - 22.4)	6.38 (162)	10.12 (257)	4.00 (102)	1/2 (13)
HHTR46A27A	4-1/2 (114)	600 - 900	0.893 - 1.094 (22.7 - 27.8)	477 (30/7) - 795 (54/7)	0.883 - 1.093 (22.4 - 27.8)	6.38 (162)	10.51 (267)	4.00 (102)	1/2 (13)
HHTR46A29A	4-1/2 (114)	900 - 1250	1.094 - 1.289 (27.8 - 32.7)	715 (30/19) - 1113 (54/19)	1.081 - 1.293 (27.5 - 32.8)	6.38 (162)	10.94 (278)	4.00 (102)	1/2 (13)
HHTR47A21A	5 (127)	350 - 600	0.681 - 0.893 (17.3 - 22.7)	336 (18/1) - 477(30/7)	0.684 - 0.883 (17.4 - 22.4)	6.93 (176)	11.26 (286)	4.00 (102)	1/2 (13)
HHTR47A27A	5 (127)	600 - 900	0.893 - 1.094 (22.7 - 27.8)	477 (30/7) - 795 (54/7)	0.883 - 1.093 (22.4 - 27.8)	6.93 (176)	11.50 (292)	4.00 (102)	1/2 (13)
HHTR47A29A	5 (127)	900 - 1250	1.094 - 1.289 (27.8 - 32.7)	715 30/19) - 1113 (54/19)	1.081 - 1.293 (27.5 - 32.8)	6.93 (176)	11.50 (292)	4.00 (102)	1/2 (13)
HHTR47A32A	5 (127)	1500 - 2000	1.412 - 1.632 (35.9 - 41.5)	1272 (54/19) - 1780 (84/19)	1.382 - 1.602 (35.1 - 40.7)	6.93 (176)	12.68 (322)	4.69 (119)	5/8 (16)
HHTR49A29A	6 (152)	900 - 1250	1.094 - 1.289 (27.8 - 32.7)	715 (30/19) - 1113 (54/19)	1.081 - 1.293 (27.5 - 32.8)	8.00 (203)	12.80 (325)	5.31 (135)	1/2 & 5/8 (13 & 16)

HHTR-A

Aluminum Bolted Tee Cable Main to Cable Tap 230kV and Below

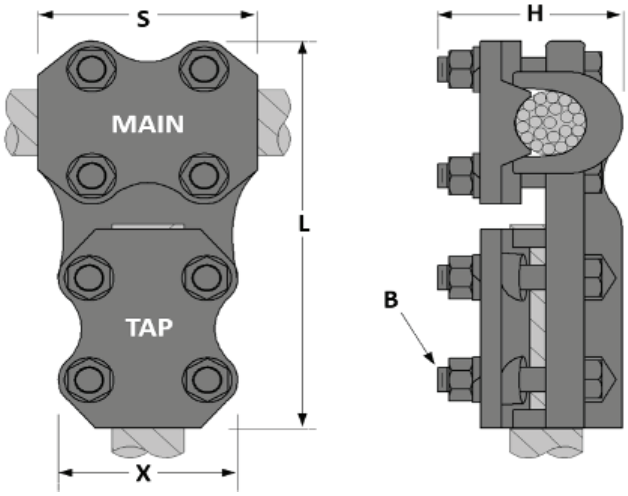

Aluminum alloy tee to connect cable in the main and cable in the tap. Electrical joint compound is recommended for all cable contact surfaces.

CASTINGS: Aluminum Alloy

HARDWARE: Galvanized Steel

See page 136 for special order options such as tin plating, hardware materials and specific angles. Contact PLP for further details, unlisted option and/or special applications.

Example: HHTR14A14A with Stainless Steel Hardware would be HHTR14A14A-SS.

Part Number	Main Cable AWG/MCM				Tap Cable AWG/MCM				Dimensions				
	AAC	AAC Diameter	ACSR	ACSR Diameter	AAC	AAC Diameter	ACSR	ACSR Diameter	in (mm)				
		in (mm)		in (mm)		in (mm)		in (mm)	H	L	S	B	X
HHTR14A14A	1/0T-250(*)	0.372 - 0.575 (9.4 - 14.6)	1/0(6/1) - 4/0(6/1)	0.398 - 0.563 (10.1 - 14.3)	1/0T-250(*)	0.372 - 0.575 (9.4 - 14.6)	1/0 (6/1) - 4/0 (6/1)	0.398 - 0.563 (10.1 - 14.3)	2.28 (58)	5.63 (143)	2.83 (72)	1/2 (13)	2.48 (63)
HHTR14A27A	1/0T-250(*)	0.372 - 0.575 (9.4 - 14.6)	1/0(6/1) - 4/0(6/1)	0.398 - 0.563 (10.1 - 14.3)	600 - 900	0.893 - 1.094 (22.7 - 27.8)	477 (30/7) - 795 (54/7)	0.883 - 1.093 (22.4 - 27.8)	3.15 (80)	6.38 (162)	2.83 (72)	1/2 (13)	3.00 (76)
HHTR17A14A	250 - 400	0.575 - 0.728 (14.6 - 18.5)	4/0(6/1) - 397(26/7)	0.563 - 0.783 (14.3 - 19.9)	1/0T-250(*)	0.372 - 0.575 (9.4 - 14.6)	1/0 (6/1) - 4/0 (6/1)	0.398 - 0.563 (10.1 - 14.3)	2.80 (71)	5.79 (147)	3.11 (79)	1/2 (13)	2.48 (63)
HHTR17A17A	250 - 400	0.575 - 0.728 (14.6 - 18.5)	4/0(6/1) - 397(26/7)	0.563 - 0.783 (14.3 - 19.9)	250 - 400	0.575 - 0.728 (14.6 - 18.5)	4/0 (6/1) - 397 (26/7)	0.563 - 0.783 (14.3 - 19.9)	2.80 (71)	6.18 (157)	3.11 (79)	1/2 (13)	2.64 (67)
HHTR17A29A	250 - 400	0.575 - 0.728 (14.6 - 18.5)	4/0(6/1) - 397(26/7)	0.563 - 0.783 (14.3 - 19.9)	900 - 1250	1.094 - 1.289 (27.8 - 32.7)	715 (30/19) - 1113 (54/19)	1.081 - 1.293 (27.5 - 32.8)	3.62 (92)	6.85 (174)	3.11 (79)	1/2 (13)	3.19 (81)
HHTR21A14A	350 - 600	0.681 - 0.893 (17.3 - 22.7)	336(18/1) - 477(30/7)	0.684 - 0.883 (17.4 - 22.4)	1/0T-250(*)	0.372 - 0.575 (9.4 - 14.6)	1/0 (6/1) - 4/0 (6/1)	0.398 - 0.563 (10.1 - 14.3)	2.80 (71)	6.10 (155)	3.39 (86)	1/2 (13)	2.48 (63)
HHTR21A17A	350 - 600	0.681 - 0.893 (17.3 - 22.7)	336(18/1) - 477(30/7)	0.684 - 0.883 (17.4 - 22.4)	250 - 400	0.575 - 0.728 (14.6 - 18.5)	4/0 (6/1) - 397 (26/7)	0.563 - 0.783 (14.3 - 19.9)	2.80 (71)	6.26 (159)	3.39 (86)	1/2 (13)	2.64 (67)
HHTR21A21A	350 - 600	0.681 - 0.893 (17.3 - 22.7)	336(18/1) - 477(30/7)	0.684 - 0.883 (17.4 - 22.4)	350 - 600	"0.681 - 0.893 (17.3 - 22.7)	336 (18/1) - 477 (30/7)	0.684 - 0.883 (17.4 - 22.4)	2.80 (71)	6.54 (166)	3.39 (86)	1/2 (13)	2.76 (70)
HHTR21A27A	350 - 600	0.681 - 0.893 (17.3 - 22.7)	336(18/1) - 477(30/7)	0.684 - 0.883 (17.4 - 22.4)	600 - 900	0.893 - 1.094 (22.7 - 27.8)	477 (30/7) - 795 (54/7)	0.883 - 1.093 (22.4 - 27.8)	3.15 (80)	6.97 (177)	3.39 (86)	1/2 (13)	3.00 (76)
HHTR21A29A	350 - 600	0.681 - 0.893 (17.3 - 22.7)	336(18/1) - 477(30/7)	0.684 - 0.883 (17.4 - 22.4)	900 - 1250	1.094 - 1.289 (27.8 - 32.7)	715 (30/19) - 1113 (54/19)	1.081 - 1.293 (27.5 - 32.8)	3.62 (92)	7.09 (180)	3.39 (86)	1/2 (13)	3.19 (81)
HHTR27A14A	600 - 900	0.893 - 1.094 (22.7 - 27.8)	477(30/7) - 795(54/7)	0.883 - 1.093 (22.4 - 27.8)	1/0T-250(*)	0.372 - 0.575 (9.4 - 14.6)	1/0(6/1) - 4/0(6/1)	0.398 - 0.563 (10.1 - 14.3)	3.15 (80)	6.18 (157)	3.62 (92)	1/2 (13)	2.48 (63)
HHTR27A17A	600 - 900	0.893 - 1.094 (22.7 - 27.8)	477(30/7) - 795(54/7)	0.883 - 1.093 (22.4 - 27.8)	250 - 400	0.575 - 0.728 (14.6 - 18.5)	4/0(6/1) - 397(26/7)	0.563 - 0.783 (14.3 - 19.9)	3.15 (80)	6.18 (157)	3.62 (92)	1/2 (13)	2.64 (67)
HHTR27A21A	600 - 900	0.893 - 1.094 (22.7 - 27.8)	477(30/7) - 795(54/7)	0.883 - 1.093 (22.4 - 27.8)	350 - 600	0.681 - 0.893 (17.3 - 22.7)	336(18/1) - 477(30/7)	0.684 - 0.883 (17.4 - 22.4)	3.15 (80)	7.05 (179)	3.62 (92)	1/2 (13)	2.76 (70)
HHTR27A27A	600 - 900	0.893 - 1.094 (22.7 - 27.8)	477(30/7) - 795(54/7)	0.883 - 1.093 (22.4 - 27.8)	600 - 900	0.893 - 1.094 (22.7 - 27.8)	477(30/7) - 795(54/7)	0.883 - 1.093 (22.4 - 27.8)	3.15 (80)	7.05 (179)	3.62 (92)	1/2 (13)	3.00 (76)
HHTR27A29A	600 - 900	0.893 - 1.094 (22.7 - 27.8)	477(30/7) - 795(54/7)	0.883 - 1.093 (22.4 - 27.8)	900 - 1250	1.094 - 1.289 (27.8 - 32.7)	715(30/19) - 1113(54/19)	1.081 - 1.293 (27.5 - 32.8)	3.62 (92)	7.20 (183)	3.62 (92)	1/2 (13)	3.19 (81)
HHTR29A14A	900 - 1250	1.094 - 1.289 (27.8 - 32.7)	715(30/19) - 1113(54/19)	1.081 - 1.293 (27.5 - 32.8)	1/0T-250(*)	0.372 - 0.575 (9.4 - 14.6)	1/0(6/1) - 4/0(6/1)	0.398 - 0.563 (10.1 - 14.3)	3.62 (92)	6.61 (168)	3.94 (100)	1/2 (13)	2.48 (63)
HHTR29A17A	900 - 1250	1.094 - 1.289 (27.8 - 32.7)	715(30/19) - 1113(54/19)	1.081 - 1.293 (27.5 - 32.8)	250 - 400	0.575 - 0.728 (14.6 - 18.5)	4/0(6/1) - 397(26/7)	0.563 - 0.783 (14.3 - 19.9)	3.62 (92)	6.77 (172)	3.94 (100)	1/2 (13)	2.64 (67)
HHTR29A21A	900 - 1250	1.094 - 1.289 (27.8 - 32.7)	715(30/19) - 1113(54/19)	1.081 - 1.293 (27.5 - 32.8)	350 - 600	0.681 - 0.893 (17.3 - 22.7)	336(18/1) - 477(30/7)	0.684 - 0.883 (17.4 - 22.4)	3.62 (92)	6.73 (171)	3.94 (100)	1/2 (13)	2.76 (70)
HHTR29A27A	900 - 1250	1.094 - 1.289 (27.8 - 32.7)	715(30/19) - 1113(54/19)	1.081 - 1.293 (27.5 - 32.8)	600 - 900	0.893 - 1.094 (22.7 - 27.8)	477(30/7) - 795(54/7)	0.883 - 1.093 (22.4 - 27.8)	3.62 (92)	7.13 (181)	3.94 (100)	1/2 (13)	3.00 (76)

HHTR-A CONTINUED

Aluminum Bolted Tee
Cable Main to Cable Tap
230kV and Below

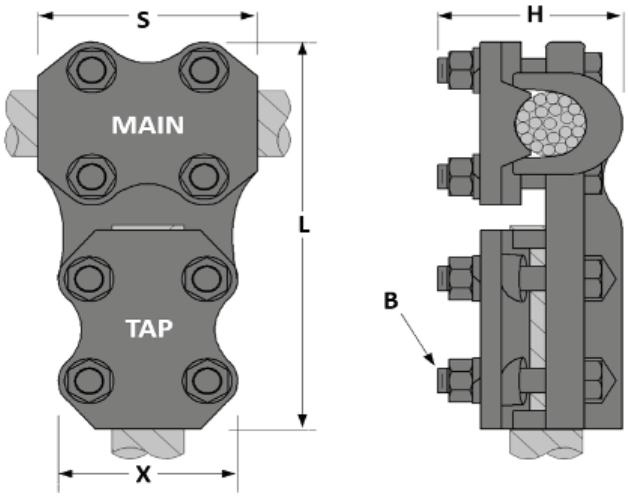

Part Number	Main Cable AWG/MCM				Tap Cable AWG/MCM				Dimensions				
	AAC	AAC Diameter	ACSR	ACSR Diameter	AAC	AAC Diameter	ACSR	ACSR Diameter	in (mm)				
		in (mm)		in (mm)		in (mm)		in (mm)	H	L	S	B	X
HHTR30A21A	1250 - 1600	1.289 - 1.459 (32.7 - 37.1)	1113 (54/19) - 1431 (45/7)	1.293 - 1.427 (32.8 - 36.3)	350 - 600	0.681 - 0.893 (17.3 - 22.7)	336 (18/1) - 477 (30/7)	0.684 - 0.883 (17.4 - 22.4)	3.66 (93)	7.36 (187)	4.45 (113)	1/2 & 5/8 (13 & 16)	2.76 (70)
HHTR30A27A	1250 - 1600	1.289 - 1.459 (32.7 - 37.1)	1113 (54/19) - 1431 (45/7)	1.293 - 1.427 (32.8 - 36.3)	600 - 900	0.893 - 1.094 (22.7 - 27.8)	477 (30/7) - 795 (54/7)	0.883 - 1.093 (22.4 - 27.8)	3.66 (93)	7.56 (192)	4.45 (113)	1/2 & 5/8 (13 & 16)	3.00 (76)
HHTR30A30A	1250 - 1600	1.289 - 1.459 (32.7 - 37.1)	1113 (54/19) - 1431 (45/7)	1.293 - 1.427 (32.8 - 36.3)	1250 - 1600	1.289 - 1.459 (32.7 - 37.1)	1113 (54/19) - 1431 (45/7)	1.293 - 1.427 (32.8 - 36.3)	3.66 (93)	8.54 (217)	4.45 (113)	1/2 (13)	3.70 (94)
HHTR32A29A	1500 - 2000	1.412 - 1.632 (35.9 - 41.5)	1272 (54/19) - 1780 (84/19)	1.382 - 1.602 (35.1 - 40.7)	900 - 1250	1.094 - 1.289 (27.8 - 32.7)	715 (30/19) - 1113 (54/19)	1.081 - 1.293 (27.5 - 32.8)	3.90 (99)	7.87 (200)	4.76 (121)	1/2 & 5/8 (13 & 16)	3.19 (81)
HHTR32A32A	1500 - 2000	1.412 - 1.632 (35.9 - 41.5)	1272 (54/19) - 1780 (84/19)	1.382 - 1.602 (35.1 - 40.7)	1500 - 2000	1.412 - 1.632 (35.9 - 41.5)	1272 (54/19) - 1780 (84/19)	1.382 - 1.602 (35.1 - 40.7)	3.90 (99)	8.82 (224)	4.76 (121)	1/2 (13)	3.82 (97)

HHT-A

Aluminum Bolted Tee Tube Main to Tube Tap 230kV and Below

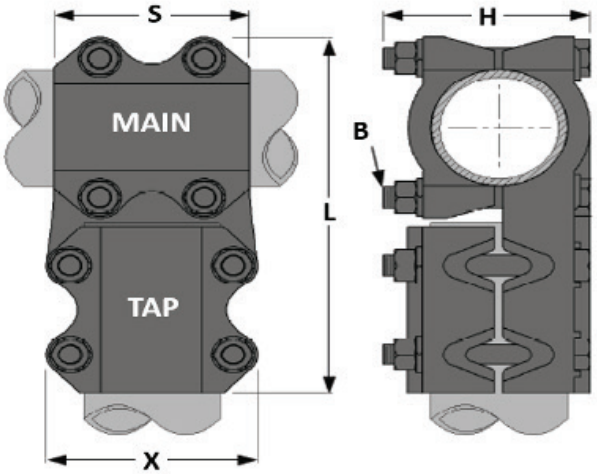

Aluminum alloy tee to connect tube in the main and tube in the tap. Electrical joint compound is recommended for all tube contact surfaces.

CASTINGS: Aluminum Alloy

HARDWARE: Galvanized Steel

See page 136 for special order options such as tin plating, hardware materials and specific angles. Contact PLP for further details, unlisted option and/or special applications.

Example: HHT37A37A with Stainless Steel Hardware would be HHT37A37A-SS.

Part Number	Main NPS Tube Diameter	Tap NPS Tube Diameter	Dimensions in (mm)				
	in (mm)	in (mm)	H	L	S	B	H
HHT37A37A	3/4 (19)	3/4 (19)	3.31 (84)	6.65 (169)	3.31 (84)	1/2 (13)	2.80 (71)
HHT38A38A	1 (25)	1 (25)	3.31 (84)	6.81 (173)	3.50 (89)	1/2 (13)	3.07 (78)
HHT39A39A	1-1/4 (32)	1-1/4 (32)	2.99 (76)	7.28 (185)	3.74 (95)	1/2 (13)	3.27 (83)
HHT40A38A	1-1/2 (38)	1 (25)	3.82 (97)	7.40 (188)	4.13 (105)	1/2 (13)	3.07 (78)
HHT40A40A	1-1/2 (38)	1-1/2 (38)	3.82 (97)	8.11 (206)	4.13 (105)	1/2 (13)	3.78 (96)
HHT41A38A	2 (51)	1 (25)	3.82 (97)	7.87 (200)	4.00 (102)	1/2 (13)	3.07 (78)
HHT41A39A	2 (51)	1-1/4 (32)	3.82 (97)	7.99 (203)	4.00 (102)	1/2 (13)	3.27 (83)
HHT41A40A	2 (51)	1-1/2 (38)	3.82 (97)	8.31 (211)	4.00 (102)	1/2 (13)	3.78 (96)
HHT41A41A	2 (51)	2 (51)	4.41 (112)	9.41 (239)	4.29 (109)	5/8 (16)	4.49 (114)
HHT41A42A	2 (51)	2-1/2 (64)	4.92 (125)	9.09 (231)	4.29 (109)	5/8 (16)	5.00 (127)
HHT42A38A	2-1/2 (64)	1 (25)	4.33 (110)	8.39 (213)	4.00 (102)	1/2 (13)	3.07 (78)
HHT42A39A	2-1/2 (64)	1-1/4 (32)	4.33 (110)	8.62 (219)	4.00 (102)	1/2 (13)	3.27 (83)
HHT42A40A	2-1/2 (64)	1-1/2 (38)	4.33 (110)	8.98 (228)	4.00 (102)	1/2 (13)	3.78 (96)
HHT42A41A	2-1/2 (64)	2 (51)	4.92 (125)	9.88 (251)	4.49 (114)	5/8 (16)	4.49 (114)
HHT42A42A	2-1/2 (64)	2-1/2 (64)	4.92 (125)	9.88 (251)	4.49 (114)	5/8 (16)	5.00 (127)
HHT42A45A	2-1/2 (64)	4 (102)	6.18 (157)	11.26 (286)	4.49 (114)	5/8 (16)	6.61 (168)
HHT43A38A	3 (76)	1 (25)	4.92 (125)	8.98 (228)	4.00 (102)	1/2 (13)	3.07 (78)
HHT43A40A	3 (76)	1-1/2 (38)	5.00 (127)	9.61 (244)	4.00 (102)	1/2 (13)	3.78 (96)

HHT-A CONTINUED

Aluminum Bolted Tee Tube Main to Tube Tap 230kV and Below

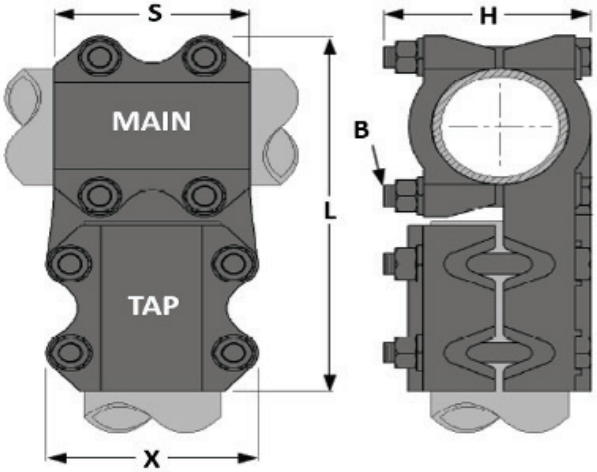

Part Number	Main NPS Tube Diameter	Tap NPS Tube Diameter	Dimensions in (mm)				
	in (mm)	in (mm)	H	L	S	B	H
HHT43A41A	3 (76)	2 (51)	5.43 (138)	10.08 (256)	4.96 (126)	5/8 (16)	4.49 (114)
HHT43A42A	3 (76)	2-1/2 (64)	5.43 (138)	10.08 (256)	4.96 (126)	5/8 (16)	5.00 (127)
HHT43A43A	3 (76)	3 (76)	5.43 (138)	10.67 (271)	4.96 (126)	5/8 (16)	5.55 (141)
HHT44A40A	3-1/2 (89)	1-1/2 (38)	5.20 (132)	10.08 (256)	4.00 (102)	1/2 (13)	3.78 (96)
HHT44A41A	3-1/2 (89)	2 (51)	5.59 (142)	10.91 (277)	5.51 (140)	5/8 (16)	4.49 (114)
HHT44A42A	3-1/2 (89)	2-1/2 (64)	5.59 (142)	10.91 (277)	5.51 (140)	5/8 (16)	5.00 (127)
HHT44A43A	3-1/2 (89)	3 (76)	5.59 (142)	11.61 (295)	5.51 (140)	5/8 (16)	5.55 (141)
HHT44A44A	3-1/2 (89)	3-1/2 (89)	5.59 (142)	12.17 (309)	5.51 (140)	5/8 (16)	6.18 (157)
HHT45A39A	4 (102)	1-1/4 (32)	5.75 (146)	10.35 (263)	4.00 (102)	1/2 (13)	3.27 (83)
HHT45A40A	4 (102)	1-1/2 (38)	5.75 (146)	10.67 (271)	4.00 (102)	1/2 (13)	3.78 (96)
HHT45A41A	4 (102)	2 (51)	6.18 (157)	11.38 (289)	5.98 (152)	5/8 (16)	4.49 (114)
HHT45A42A	4 (102)	2-1/2 (64)	6.18 (157)	11.54 (293)	5.98 (152)	5/8 (16)	5.00 (127)
HHT45A43A	4 (102)	3 (76)	6.18 (157)	12.01 (305)	5.98 (152)	5/8 (16)	5.51 (140)

HHT-A CONTINUED

Aluminum Bolted Tee Tube Main to Tube Tap 230kV and Below

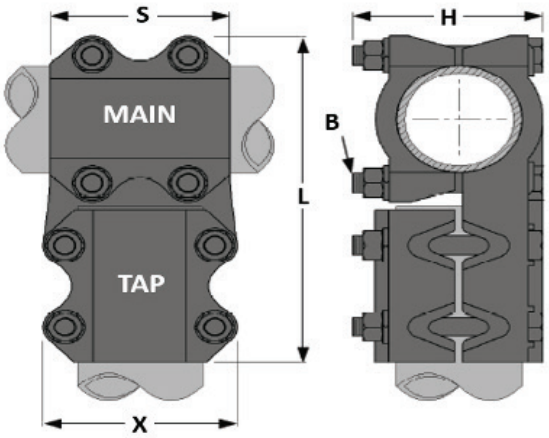

Part Number	Main NPS Tube Diameter	Tap NPS Tube Diameter	Dimensions in (mm)				
	in (mm)	in (mm)	H	L	S	B	H
HHT45A45A	4 (102)	4 (102)	6.18 (157)	12.87 (327)	5.98 (152)	5/8 (16)	6.61 (168)
HHT45A49A	4 (102)	6 (152)	7.99 (203)	13.11 (333)	5.98 (152)	5/8 (16)	8.78 (223)
HHT46A41A	4-1/2 (114)	2 (51)	6.38 (162)	11.89 (302)	5.98 (152)	5/8 (16)	4.49 (114)
HHT46A43A	4-1/2 (114)	3 (76)	6.38 (162)	12.24 (311)	5.98 (152)	5/8 (16)	5.55 (141)
HHT46A46A	4-1/2 (114)	4-1/2 (114)	6.38 (162)	14.13 (359)	6.50 (165)	5/8 (16)	7.13 (181)
HHT47A41A	5 (127)	2 (51)	6.97 (177)	12.32 (313)	4.33 (110)	5/8 (16)	4.49 (114)
HHT47A42A	5 (127)	2-1/2 (64)	6.97 (177)	12.44 (316)	5.98 (152)	5/8 (16)	5.00 (127)
HHT47A43A	5 (127)	3 (76)	6.97 (177)	13.11 (333)	5.98 (152)	5/8 (16)	5.55 (141)
HHT47A47A	5 (127)	5 (127)	6.97 (177)	15.12 (384)	7.01 (178)	5/8 (16)	7.72 (196)
HHT49A41A	6 (152)	2 (51)	7.99 (203)	13.54 (344)	5.98 (152)	5/8 (16)	4.49 (114)
HHT49A45A	6 (152)	4 (102)	7.99 (203)	15.28 (388)	5.98 (152)	5/8 (16)	6.61 (168)
HHT49A47A	6 (152)	5 (127)	8.11 (206)	16.26 (413)	7.91 (201)	5/8 (16)	7.72 (196)
HHT49A49A	6 (152)	6 (152)	8.11 (206)	17.20 (437)	7.91 (201)	5/8 (16)	8.78 (223)

AT/ATT

Bronze Bolted Tee
Cable Main to Cable Tap, U-Bolt
230kV and Below

Copper alloy tee to connect cable in the main and cable in the tap. Electrical joint compound is recommended for all cable contact surfaces.

CASTINGS: Copper Alloy

HARDWARE: Silicone Bronze

See page 136 for special order options such as tin plating, hardware materials and specific angles. Contact PLP for further details, unlisted option and/or special applications.

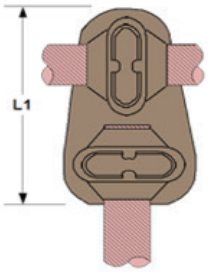

Fig. 1

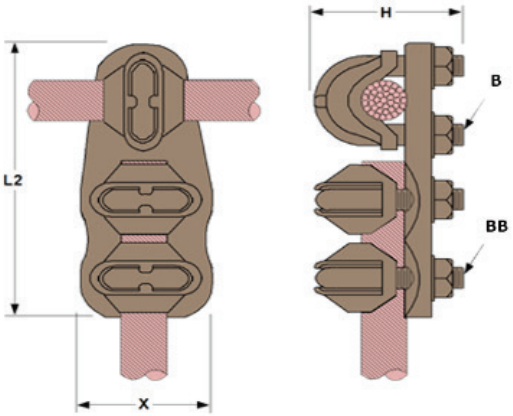

Fig. 2

Part Number		Main Cable AWG/MCM	Main Cable Diameter	Tap Cable AWG/MCM	Tap Cable Diameter	Dimensions					
						in (mm)					
Figure 1	Figure 2		in (mm)		in (mm)	H	L1	L2	B	BB	X
AT1010	ATT1010	6S - 1/0T(*)	.162 - .372 (4.1 - 9.4)	6S - 1/0T(*)	.162 - .372 (4.1 - 9.4)	1.57 (40)	2.76 (70)	3.94 (100)	3/8 (10)	3/8 (10)	1.54 (39)
AT1313	ATT1313	1/0T - 4/0T(*)	.372 - .528 (9.4 - 13.4)	1/0T - 4/0T(*)	.372 - .528 (9.4 - 13.4)	1.85 (47)	3.15 (80)	4.41 (112)	3/8 (10)	3/8 (10)	1.77 (45)
AT1513	ATT1513	1/0T - 300(*)	.372 - .630 (9.4 - 16.0)	1/0T -4/0T(*)	.372 - .528 (9.4 - 13.4)	2.01 (51)	3.35 (85)	4.53 (115)	3/8 (10)	3/8 (10)	1.77 (45)
AT1515	ATT1515	1/0T - 300(*)	.372 - .630 (9.4 - 16.0)	1/0T - 300(*)	.372 - .630 (9.4 - 16.0)	2.01 (51)	3.35 (85)	4.65 (118)	3/8 (10)	3/8 (10)	1.97 (50)
AT1913	ATT1913	300 - 500	.630 - .814 (16.0 - 20.7)	1/0T - 4/0T(*)	.372 - .528 (9.4 - 13.4)	2.20 (56)	3.54 (90)	4.88 (124)	3/8 (10)	3/8 (10)	1.77 (45)
AT1915	ATT1915	300 - 500	.630 - .814 (16.0 - 20.7)	1/0T - 300(*)	.372 - .630 (9.4 - 16.0)	2.20 (56)	3.58 (91)	4.96 (126)	3/8 (10)	3/8 (10)	1.97 (50)
AT1919	ATT1919	300 - 500	.630 - .814 (16.0 - 20.7)	300 - 500	.630 - .814 (16.0 - 20.7)	2.20 (56)	3.82 (97)	5.31 (135)	3/8 (10)	3/8 (10)	2.28 (58)
AT2515	ATT2515	500 - 800	.814 - 1.031 (20.7 - 26.2)	1/0T - 300(*)	.372 - .630 (9.4 - 16.0)	2.64 (67)	4.06 (103)	5.51 (140)	1/2 (13)	3/8 (10)	1.97 (50)
AT2519	ATT2519	500 - 800	.814 - 1.031 (20.7 - 26.2)	300 - 500	.630 - .814 (16.0 - 20.7)	2.64 (67)	4.33 (110)	6.02 (153)	1/2 (13)	3/8 (10)	2.28 (58)
AT2525	ATT2525	500 - 800	.814 - 1.031 (20.7 - 26.2)	500 - 800	.814 - 1.031 (20.7 - 26.2)	2.64 (67)	4.69 (119)	6.57 (167)	1/2 (13)	1/2 (13)	2.72 (69)
AT2815	ATT2815	750 - 1000	.998 - 1.152 (25.3 - 29.3)	1/0T - 300(*)	.372 - .630 (9.4 - 16.0)	3.19 (81)	4.29 (109)	5.67 (144)	1/2 (13)	3/8 (10)	1.97 (50)
AT2819	ATT2819	750 - 1000	.998 - 1.152 (25.3 - 29.3)	300 - 500	.630 - .814 (16.0 - 20.7)	3.19 (81)	4.69 (119)	6.06 (154)	1/2 (13)	3/8 (10)	2.28 (58)
AT2828	ATT2828	750 - 1000	.998 - 1.152 (25.3 - 29.3)	750 - 1000	.998 - 1.152 (25.3 - 29.3)	3.19 (81)	5.24 (133)	7.01 (178)	1/2 (13)	1/2 (13)	2.91 (74)

*S denotes SOLID wire, and T denotes STRANDED wire

CT

Bronze Bolted Tee
Cable Main to Cable Tap, Compact 230kV and Below

Copper alloy tee to connect cable in the main and cable in the tap. Electrical joint compound is recommended for all cable contact surfaces.

CASTINGS: Copper Alloy

HARDWARE: Silicone Bronze

See page 136 for special order options such as tin plating, hardware materials and specific angles. Contact PLP for further details, unlisted option and/or special applications.

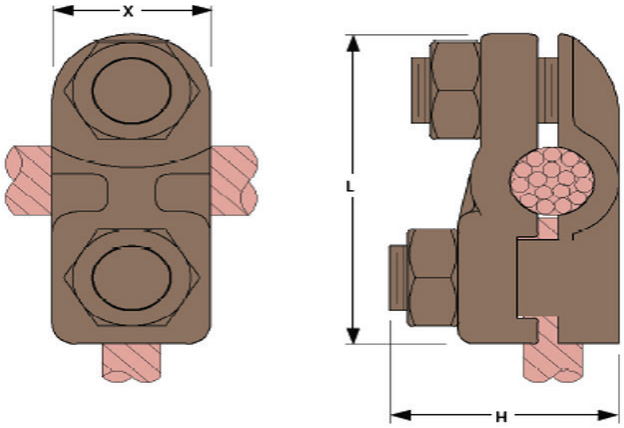

Part Number	Main Cable AWG/MCM	Main Cable Diameter	Tap Cable AWG/MCM	Tap Cable Diameter	Dimensions in (mm)		
		in (mm)		in (mm)	H	L	X
CT2T8T	2T(*)	.292 (7.4)	8T(*)	.146 (3.7)	1.30 (33)	1.97 (50)	0.75 (19)
CT1T1T	1T(*)	.332 (8.4)	1T(*)	.332 (8.4)	1.10 (28)	2.20 (56)	0.83 (21)
CT101T	1/0T(*)	.372 (9.4)	1T(*)	.332 (8.4)	1.30 (33)	2.09 (53)	1.02 (26)
CT1010	1/0T(*)	.372 (9.4)	1/0T(*)	.372 (9.4)	1.30 (33)	2.28 (58)	1.02 (26)
CT111T	2/0T(*)	.419 (10.6)	1T(*)	.332 (8.4)	1.30 (33)	2.09 (53)	0.83 (21)
CT1111	2/0T(*)	.419 (10.6)	2/0T(*)	.419 (10.6)	1.46 (37)	2.28 (58)	1.02 (26)
CT132T	4/0T(*)	.528 (13.4)	2T(*)	.292 (7.4)	1.42 (36)	2.28 (58)	0.91 (23)
CT1310	4/0T(*)	.528 (13.4)	1/0T(*)	.372 (9.4)	1.46 (37)	2.44 (62)	0.98 (25)
CT1311	4/0T(*)	.528 (13.4)	2/0T(*)	.419 (10.6)	1.46 (37)	2.44 (62)	1.02 (26)
CT1313	4/0T(*)	.528 (13.4)	4/0T(*)	.528 (13.4)	1.46 (37)	2.52 (64)	1.14 (29)
CT1414	250	.575 (14.6)	250	.575 (14.6)	1.57 (40)	2.87 (73)	1.38 (35)
CT1616	350	.681 (17.3)	350	.681 (17.3)	1.61 (41)	2.87 (73)	1.38 (35)
CT1919	500	.814 (20.7)	500	.814 (20.7)	2.05 (52)	3.31 (84)	1.57 (40)
CT2525	800	1.031 (26.2)	800	1.031 (26.2)	2.44 (62)	3.94 (100)	1.85 (47)
CT2819	1000	1.152 (29.3)	500	.814 (20.7)	2.32 (59)	3.70 (94)	1.57 (40)

*S denotes SOLID wire, and T denotes STRANDED wire

CB

Bronze Bolted Tee Cable to Pad, Eyebolt 230kV and Below

Fig. 1

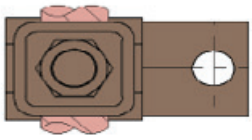

Fig. 2

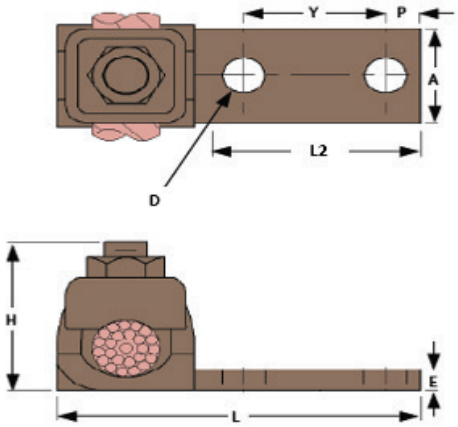

Copper alloy tee connector to connect cable to a pad. Electrical joint compound is recommended for all cable/flat contact surfaces.

CASTINGS: Copper Alloy

HARDWARE: Silicone Bronze

See page 136 for special order options such as tin plating, hardware materials and specific angles. Contact PLP for further details, unlisted option and/or special applications.

Part Number	Figure	Cable AWG/MCM	Diameter	Dimensions in (mm)							
			in (mm)	A	D	E	H	L	L2	P	Y
CB8T	1	14S - 8T (*)	.064 - .146 (1.6 - 3.7)	0.63 (16)	0.24 (6)	0.16 (4)	0.94 (24)	1.30 (33)	0.71 (18)	0.31 (8)	–
CB4T	1	6S - 4T(*)	.162 - .232 (4.1 - 5.9)	0.63 (16)	0.28 (7)	0.16 (4)	0.94 (24)	1.30 (33)	0.71 (18)	0.31 (8)	–
CB1T	1	4T - 1T(*)	.232 - .332 (5.9 - 8.4)	0.63 (16)	0.28 (7)	0.28 (7)	1.06 (27)	1.57 (40)	0.98 (25)	0.35 (9)	–
CB20	1	1/0T - 2/0T(*)	.372 - .419 (9.4 - 10.6)	0.79 (20)	0.39 (10)	0.24 (6)	1.22 (31)	1.81 (46)	0.98 (25)	0.43 (11)	–
CB20-2	2	1/0T - 2/0T(*)	.372 - .419 (9.4 - 10.6)	0.79 (20)	0.39 (10)	0.28 (7)	1.22 (31)	2.83 (72)	2.01 (51)	0.43 (11)	0.98 (25)
CB40	1	3/0T - 4/0T(*)	.470 - .528 (11.9 - 13.4)	1.02 (26)	0.56 (14)	0.24 (6)	1.46 (37)	2.17 (55)	1.06 (27)	0.51 (13)	–
CB40-2	2	3/0T - 4/0T(*)	.470 - .528 (11.9 - 13.4)	1.02 (26)	0.39 (10)	0.31 (8)	1.46 (37)	3.19 (81)	2.09 (53)	0.43 (11)	0.98 (25)
CB40-2N	2	3/0T - 4/0T(*)	.470 - .528 (11.9 - 13.4)	1.02 (26)	0.56 (14)	0.31 (8)	1.46 (37)	4.21 (107)	3.00 (76)	0.63 (16)	1.77 (45)
CB350	1	250 - 350	.575 - .681 (14.6 - 17.3)	1.30 (33)	0.56 (14)	0.39 (10)	1.69 (43)	2.80 (71)	1.61 (41)	0.67 (17)	–
CB350-2	2	250 - 350	.575 - .681 (14.6 - 17.3)	1.30 (33)	0.39 (10)	0.31 (8)	1.69 (43)	3.35 (85)	2.09 (53)	0.43 (11)	0.98 (25)
CB350-2N	2	250 - 350	.575 - .681 (14.6 - 17.3)	1.30 (33)	0.56 (14)	0.31 (8)	1.69 (43)	4.57 (116)	3.00 (76)	0.63 (16)	1.77 (45)
CB500	1	400 - 500	.728 - .814 (18.5 - 20.7)	1.42 (36)	0.56 (14)	0.31 (8)	1.89 (48)	3.23 (82)	1.81 (46)	0.83 (21)	–
CB800	1	600 - 800	.893 - 1.031 (22.7 - 26.2)	1.65 (42)	0.67 (17)	0.39 (10)	2.28 (58)	3.74 (95)	2.09 (53)	0.94 (24)	–
CB800-2N	2	600 - 800	.893 - 1.031 (22.7 - 26.2)	1.65 (42)	0.56 (14)	0.39 (10)	2.28 (58)	4.65 (118)	3.00 (76)	0.63 (16)	1.77 (45)

HB

Bronze Bolted Tee
Tube to Pad
230kV and Below

Copper alloy tee to connect a tube in the main to a flat pad. Electrical joint compound is recommended for all tube/flat contact surfaces.

CASTINGS: Copper Alloy

HARDWARE: Silicone Bronze

See page 136 for special order options such as tin plating, hardware materials and specific angles. Contact PLP for further details, unlisted option and/or special applications.

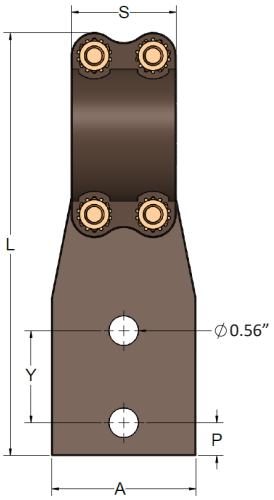

Figure 1

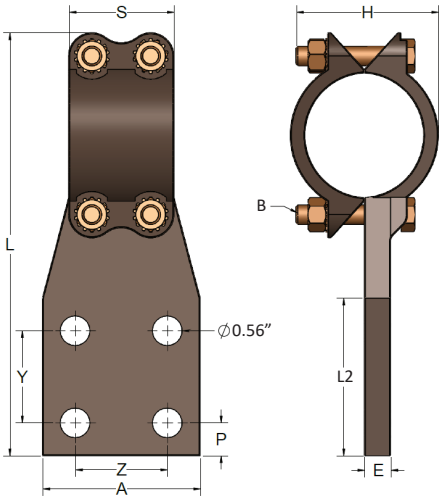

Figure 2

Part Number	Figure	Tube NPS Diameter	Dimensions								
		in (mm)	in (mm)								
			A	E	H	L	L2	P	S	B	Y/Z
HB37-2N	1	3/4 (19)	1.89 (48)	0.39 (10)	1.73 (44)	5.79 (147)	3.00 (76)	0.63 (16)	2.01 (51)	3/8 (10)	1.75 (44)
HB37-4N	2	3/4 (19)	3.00 (76)	0.39 (10)	1.73 (44)	5.79 (147)	3.00 (76)	0.63 (16)	2.01 (51)	3/8 (10)	1.75 (44)
HB38-2N	1	1 (25)	1.89 (48)	0.39 (10)	1.89 (48)	6.14 (156)	3.00 (76)	0.63 (16)	2.09 (53)	3/8 (10)	1.75 (44)
HB38-4N	2	1 (25)	3.00 (76)	0.39 (10)	1.89 (48)	6.14 (156)	3.00 (76)	0.63 (16)	2.09 (53)	3/8 (10)	1.75 (44)
HB38-4N4	2	1 (25)	4.00 (102)	0.39 (10)	1.89 (48)	7.13 (181)	4.00 (102)	1.14 (29)	2.09 (53)	3/8 (10)	1.75 (44)
HB39-2N	1	1-1/4 (32)	2.25 (57)	0.51 (13)	2.44 (62)	6.93 (176)	3.00 (76)	0.63 (16)	2.76 (70)	1/2 (13)	1.75 (44)
HB39-4N	2	1-1/4 (32)	3.00 (76)	0.51 (13)	2.44 (62)	6.93 (176)	3.00 (76)	0.63 (16)	2.76 (70)	1/2 (13)	1.75 (44)
HB39-4N4	2	1-1/4 (32)	4.00 (102)	0.51 (13)	2.44 (62)	7.95 (202)	4.00 (102)	1.14 (29)	2.76 (70)	1/2 (13)	1.75 (44)
HB40-2N	1	1-1/2 (38)	2.50 (64)	0.51 (13)	2.60 (66)	7.05 (179)	3.00 (76)	0.63 (16)	2.64 (70)	1/2 (13)	1.75 (44)
HB40-4N	2	1-1/2 (38)	3.00 (76)	0.51 (13)	2.60 (66)	7.05 (179)	3.00 (76)	0.63 (16)	2.64 (70)	1/2 (13)	1.75 (44)
HB40-4N4	2	1-1/2 (38)	4.00 (102)	0.51 (13)	2.60 (66)	8.19 (208)	4.00 (102)	1.14 (29)	2.64 (70)	1/2 (13)	1.75 (44)
HB41-2N	1	2 (51)	2.75 (70)	0.51 (13)	3.15 (80)	8.03 (204)	3.00 (76)	0.63 (16)	2.76 (70)	1/2 (13)	1.75 (44)
HB41-4N	2	2 (51)	3.00 (76)	0.51 (13)	3.15 (80)	8.03 (204)	3.00 (76)	0.63 (16)	2.76 (70)	1/2 (13)	1.75 (44)
HB41-4N4	2	2 (51)	4.00 (102)	0.51 (13)	3.15 (80)	9.06 (230)	4.00 (102)	1.14 (29)	2.76 (70)	1/2 (13)	1.75 (44)
HB42-2N	1	2-1/2 (64)	3.00 (76)	0.71 (18)	3.90 (99)	8.50 (216)	3.00 (76)	0.63 (16)	2.76 (70)	1/2 (13)	1.75 (44)
HB42-4N	2	2-1/2 (64)	3.00 (76)	0.71 (18)	3.90 (99)	8.50 (216)	3.00 (76)	0.63 (16)	2.76 (70)	1/2 (13)	1.75 (44)

HB CONTINUED

Bronze Bolted Tee Tube to Pad 230kV and Below

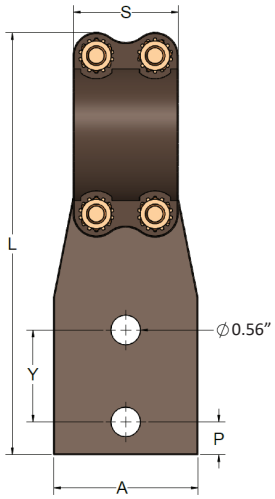

Figure 1

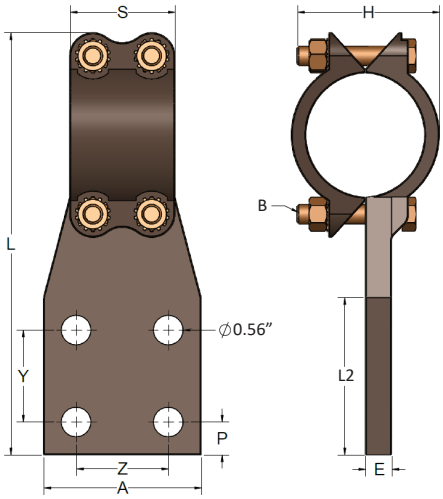

Figure 2

Part Number	Figure	Tube NPS Diameter	Dimensions								
		in (mm)	in (mm)								
			A	E	H	L	L2	P	S	B	Y/Z
HB42-4N4	2	2-1/2 (64)	4.00 (102)	0.71 (18)	3.90 (99)	9.76 (248)	4.00 (102)	1.14 (29)	2.76 (70)	1/2 (13)	1.75 (44)
HB43-2N	1	3 (76)	3.00 (76)	0.71 (18)	4.33 (110)	9.69 (246)	3.00 (76)	0.63 (16)	3.31 (84)	5/8 (16)	1.75 (44)
HB43-4N	2	3 (76)	3.00 (76)	0.71 (18)	4.33 (110)	9.69 (246)	3.00 (76)	0.63 (16)	3.31 (84)	5/8 (16)	1.75 (44)
HB43-4N4	2	3 (76)	4.00 (102)	0.71 (18)	4.33 (110)	10.67 (271)	4.00 (102)	1.14 (29)	3.31 (84)	5/8 (16)	1.75 (44)
HB44-2N	1	3-1/2 (89)	3.00 (76)	0.83 (21)	4.92 (125)	10.39 (264)	3.00 (76)	0.63 (16)	3.39 (86)	5/8 (16)	1.75 (44)
HB44-4N	2	3-1/2 (89)	3.00 (76)	0.83 (21)	4.92 (125)	10.39 (264)	3.00 (76)	0.63 (16)	3.39 (86)	5/8 (16)	1.75 (44)
HB44-4N4	2	3-1/2 (89)	4.00 (102)	0.83 (21)	4.92 (125)	11.42 (290)	4.00 (102)	1.14 (29)	3.39 (86)	5/8 (16)	1.75 (44)
HB45-2N	1	4 (102)	5.00 (127)	0.83 (21)	5.51 (140)	10.98 (279)	3.00 (76)	0.63 (16)	4.02 (102)	5/8 (16)	1.75 (44)
HB45-4N	2	4 (102)	5.00 (127)	0.83 (21)	5.51 (140)	10.98 (279)	3.00 (76)	0.63 (16)	4.02 (102)	5/8 (16)	1.75 (44)
HB45-4N4	2	4 (102)	5.00 (127)	0.83 (21)	5.51 (140)	12.01 (305)	4.00 (102)	1.14 (29)	4.02 (102)	5/8 (16)	1.75 (44)
HB47-4N	2	5 (127)	5.00 (127)	0.98 (25)	6.69 (170)	11.73 (298)	3.00 (76)	0.63 (16)	5.00 (127)	5/8 (16)	1.75 (44)
HB47-4N4	2	5 (127)	5.00 (127)	0.98 (25)	6.69 (170)	12.76 (324)	4.00 (102)	1.14 (29)	5.00 (127)	5/8 (16)	1.75 (44)

HBR

Bronze Bolted Tee
Cable to Pad
230kV and Below

Copper alloy tee to connect a cable in the main to a flat pad. Electrical joint compound is recommended for all cable/flat contact surfaces.

CASTINGS: Copper Alloy

HARDWARE: Silicone Bronze

See page 136 for special order options such as tin plating, hardware materials and specific angles. Contact PLP for further details, unlisted option and/or special applications.

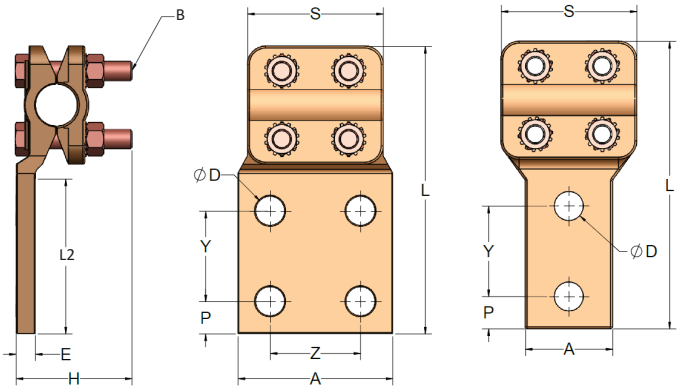

FIGURE 1 FIGURE 2

Part Number	Figure	Cable AWG/MCM	Cable Diameter	Dimensions in (mm)									
			in (mm)	A	D	E	H	L	L2	P	S	B	Y/Z
HBR13-2N	2	2/0S - 250*	0.365 - 0.528 (9.3 - 13.4)	1.26 (32)	0.56 (14.3)	0.31 (8)	1.73 (44)	5.24 (133)	3.00 (76)	0.63 (16)	2.52 (64)	5/8 (10)	1.75 (44)
HBR13-4N	1	2/0S - 250*	0.365 - 0.528 (9.3 - 13.4)	3.00 (76)	0.56 (14.3)	0.31 (8)	1.73 (44)	5.24 (133)	3.00 (76)	0.63 (16)	2.52 (64)	5/8 (10)	1.75 (44)
HBR19-2N	2	250 - 500	0.575 - 0.814 (14.6 - 20.7)	1.69 (43)	0.56 (14.3)	0.39 (10)	2.28 (58)	5.55 (141)	3.00 (76)	0.63 (16)	2.64 (67)	5/8 (10)	1.75 (44)
HBR19-4N	1	250 - 500	0.575 - 0.814 (14.6 - 20.7)	3.00 (76)	0.56 (14.3)	0.39 (10)	2.28 (58)	5.55 (141)	3.00 (76)	0.63 (16)	2.64 (67)	5/8 (10)	1.75 (44)
HBR25-2N	2	500 - 800	0.814 - 1.031 (20.7 - 26.2)	1.69 (43)	0.56 (14.3)	0.39 (10)	2.40 (61)	5.79 (147)	3.00 (76)	0.63 (16)	2.80 (71)	5/8 (10)	1.75 (44)
HBR25-4N	1	500 - 800	0.814 - 1.031 (20.7 - 26.2)	3.00 (76)	0.56 (14.3)	0.51 (13)	2.40 (61)	5.79 (147)	3.00 (76)	0.63 (16)	2.80 (71)	5/8 (10)	1.75 (44)
HBR28-2N	2	750 - 1000	0.998 - 1.152 (25.3 - 29.3)	2.01 (51)	0.56 (14.3)	0.51 (13)	2.40 (61)	6.34 (161)	3.00 (76)	0.63 (16)	3.00 (76)	1/2 (13)	1.75 (44)
HBR28-4N	1	750 - 1000	0.998 - 1.152 (25.3 - 29.3)	3.00 (76)	0.56 (14.3)	0.51 (13)	2.40 (61)	6.34 (161)	3.00 (76)	0.63 (16)	3.00 (76)	1/2 (13)	1.75 (44)
HBR30-4N	1	1000 - 1500	1.152 - 1.412 (29.3 - 35.9)	3.00 (76)	0.56 (14.3)	0.51 (13)	2.83 (72)	6.81 (173)	3.00 (76)	0.63 (16)	3.35 (85)	1/2 (13)	1.75 (44)

*S denotes solid wire, and T denotes standard wire.

HATT

Bronze Bolted Tee
Tube Main to Cable Tap, U-Bolt
230kV and Below

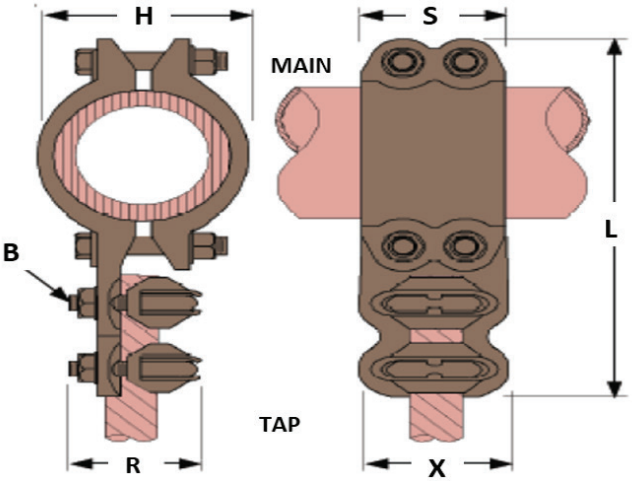

Copper alloy tee to connect tube in the main and cable in the tap. Electrical joint compound is recommended for all tube/cable contact surfaces.

CASTINGS: Copper Alloy

HARDWARE: Silicone Bronze

See page 136 for special order options such as tin plating, hardware materials and specific angles. Contact PLP for further details, unlisted option and/or special applications.

Part Number	NPS Tube Diameter	Cable AWG/MCM	Cable Diameter	Dimensions in (mm)					
	in (mm)		in (mm)	H	R	L	S	B	X
HATT3615	1/2 (13)	1/0T - 300(*)	0.372 - 0.630 (9.4 - 16.0)	1.22 (31)	2.01 (51)	5.16 (131)	2.05 (52)	3/8 (10)	1.97 (50)
HATT3713	3/4 (19)	1/0T - 4/0T(*)	0.372 - 0.528 (9.4 - 13.4)	1.54 (39)	1.89 (48)	5.00 (127)	2.05 (52)	3/8 (10)	1.69 (43)
HATT3715	3/4 (19)	1/0T - 300(*)	0.372 - 0.630 (9.4 - 16.0)	1.54 (39)	2.01 (51)	5.31 (135)	2.05 (52)	3/8 (10)	1.97 (50)
HATT3719	3/4 (19)	300 - 500	0.630 - 0.814 (16.0 - 20.7)	1.54 (39)	2.24 (57)	5.67 (144)	2.05 (52)	3/8 (10)	2.28 (58)
HATT3813	1 (25)	1/0T - 4/0T(*)	0.372 - 0.528 (9.4 - 13.4)	1.77 (45)	1.89 (48)	5.67 (144)	2.05 (52)	3/8 (10)	1.69 (43)
HATT3815	1 (25)	1/0T - 300(*)	0.372 - 0.630 (9.4 - 16.0)	1.77 (45)	2.01 (51)	5.75 (146)	2.05 (52)	3/8 (10)	1.97 (50)
HATT3819	1 (25)	300 - 500	0.630 - 0.814 (16.0 - 20.7)	1.77 (45)	2.24 (57)	6.06 (154)	2.05 (52)	3/8 (10)	2.28 (58)
HATT3825	1 (25)	500 - 800	0.814 - 1.031 (20.7 - 26.2)	1.77 (45)	2.68 (68)	6.77 (172)	2.05 (52)	3/8 & 1/2 (10 & 13)	2.72 (69)
HATT3828	1 (25)	750 - 1000	0.998 - 1.152 (25.3 - 29.3)	1.77 (45)	3.00 (76)	7.20 (183)	2.05 (52)	3/8 & 1/2 (10 & 13)	2.87 (73)
HATT3913	1-1/4 (32)	1/0T - 4/0T(*)	0.372 - 0.528 (9.4 - 13.4)	2.28 (58)	1.89 (48)	5.59 (142)	2.05 (52)	3/8 (10)	1.69 (43)
HATT3915	1-1/4 (32)	1/0T - 300(*)	0.372 - 0.630 (9.4 - 16.0)	2.28 (58)	2.01 (51)	5.94 (151)	2.05 (52)	3/8 (10)	1.97 (50)
HATT3919	1-1/4 (32)	300 - 500	0.630 - 0.814 (16.0 - 20.7)	2.28 (58)	2.24 (57)	6.30 (160)	2.05 (52)	3/8 (10)	2.28 (58)
HATT3925	1-1/4 (32)	500 - 800	0.814 - 1.031 (20.7 - 26.2)	2.28 (58)	2.68 (68)	7.52 (191)	2.80 (71)	1/2 (13)	2.72 (69)
HATT3928	1-1/4 (32)	750 - 1000	0.998 - 1.152 (25.3 - 29.3)	2.28 (58)	3.00 (76)	7.80 (198)	2.80 (71)	1/2 (13)	2.87 (73)
HATT4013	1-1/2 (38)	1/0T - 4/0T(*)	0.372 - 0.528 (9.4 - 13.4)	2.56 (65)	1.89 (48)	5.98 (152)	2.09 (53)	3/8 (10)	1.69 (43)
HATT4015	1-1/2 (38)	1/0T - 300(*)	0.372 - 0.630 (9.4 - 16.0)	2.56 (65)	2.01 (51)	6.30 (160)	2.09 (53)	3/8 (10)	1.97 (50)
HATT4019	1-1/2 (38)	300 - 500	0.630 - 0.814 (16.0 - 20.7)	2.56 (65)	2.24 (57)	6.69 (170)	2.09 (53)	3/8 (10)	2.28 (58)
HATT4025	1-1/2 (38)	500 - 800	0.814 - 1.031 (20.7 - 26.2)	2.56 (65)	2.68 (68)	7.87 (200)	2.72 (69)	1/2 (13)	2.72 (69)
HATT4028	1-1/2 (38)	750 - 1000	0.998 - 1.152 (25.3 - 29.3)	2.56 (65)	3.00 (76)	8.15 (207)	2.72 (69)	1/2 (13)	2.87 (73)

HATT CONTINUED

Bronze Bolted Tee
Tube Main to Cable Tap, U-Bolt
230kV and Below

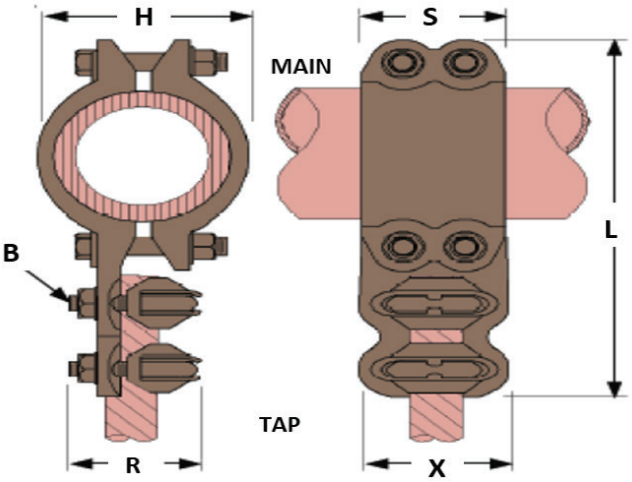

Part Number	NPS Tube Diameter	Cable AWG/MCM	Cable Diameter	Dimensions in (mm)					
	in (mm)		in (mm)	H	R	L	S	B	X
HATT4113	2 (51)	1/0T - 4/0T(*)	0.372 - 0.528 (9.4 - 13.4)	2.95 (75)	1.89 (48)	6.69 (170)	2.05 (52)	3/8 (10)	1.69 (43)
HATT4115	2 (51)	1/0T - 300(*)	0.372 - 0.630 (9.4 - 16.0)	2.95 (75)	2.01 (51)	6.89 (175)	2.05 (52)	3/8 (10)	1.97 (50)
HATT4119	2 (51)	300 - 500	0.630 - 0.814 (16.0 - 20.7)	2.95 (75)	2.24 (57)	7.17 (182)	2.05 (52)	3/8 (10)	2.28 (58)
HATT4125	2 (51)	500 - 800	0.814 - 1.031 (20.7 - 26.2)	3.07 (78)	2.68 (68)	8.70 (221)	2.72 (69)	1/2 (13)	2.72 (69)
HATT4128	2 (51)	750 - 1000	0.998 - 1.152 (25.3 - 29.3)	3.07 (78)	3.00 (76)	9.61 (244)	2.72 (69)	1/2 (13)	2.87 (73)
HATT4213	2-1/2 (64)	1/0T - 4/0T(*)	0.372 - 0.528 (9.4 - 13.4)	3.66 (93)	1.89 (48)	7.32 (186)	2.05 (52)	3/8 (10)	1.69 (43)
HATT4215	2-1/2 (64)	1/0T - 300(*)	0.372 - 0.630 (9.4 - 16.0)	3.66 (93)	2.01 (51)	7.64 (194)	2.05 (52)	3/8 (10)	1.97 (50)
HATT4219	2-1/2 (64)	300 - 500	0.630 - 0.814 (16.0 - 20.7)	3.66 (93)	2.24 (57)	7.99 (203)	2.05 (52)	3/8 (10)	2.28 (58)
HATT4225	2-1/2 (64)	500 - 800	0.814 - 1.031 (20.7 - 26.2)	3.82 (97)	2.68 (68)	8.62 (219)	2.76 (70)	1/2 (13)	2.72 (69)
HATT4228	2-1/2 (64)	750 - 1000	0.998 - 1.152 (25.3 - 29.3)	3.82 (97)	3.00 (76)	9.65 (245)	2.76 (70)	1/2 (13)	2.87 (73)
HATT4310	3 (76)	6S - 1/0T(*)	0.162 - 0.372 (4.1 - 9.4)	4.17 (106)	1.57 (40)	8.19 (208)	2.05 (52)	3/8 (10)	1.50 (38)
HATT4313	3 (76)	1/0T - 4/0T(*)	0.372 - 0.528 (9.4 - 13.4)	4.17 (106)	1.89 (48)	8.31 (211)	2.05 (52)	3/8 (10)	1.69 (43)
HATT4315	3 (76)	1/0T - 300(*)	0.372 - 0.630 (9.4 - 16.0)	4.17 (106)	2.01 (51)	8.58 (218)	2.05 (52)	3/8 (10)	1.97 (50)
HATT4319	3 (76)	300 - 500	0.630 - 0.814 (16.0 - 20.7)	4.17 (106)	2.24 (57)	8.94 (227)	2.05 (52)	3/8 (10)	2.28 (58)
HATT4325	3 (76)	500 - 800	0.814 - 1.031 (20.7 - 26.2)	4.37 (111)	2.68 (68)	9.65 (245)	3.31 (84)	1/2 (13)	2.72 (69)
HATT4328	3 (76)	750 - 1000	0.998 - 1.152 (25.3 - 29.3)	4.37 (111)	3.00 (76)	10.00 (254)	3.31 (84)	1/2 (13)	2.87 (73)
HATT4419	3-1/2 (89)	300 - 500	0.630 - 0.814 (16.0 - 20.7)	4.76 (121)	2.24 (57)	9.49 (241)	2.01 (51)	3/8 (10)	2.28 (58)
HATT4515	4 (102)	1/0T - 300(*)	0.372 - 0.630 (9.4 - 16.0)	5.28 (134)	2.01 (51)	9.17 (233)	2.05 (52)	3/8 (10)	1.97 (50)
HATT4519	4 (102)	300 - 500	0.630 - 0.814 (16.0 - 20.7)	5.28 (134)	2.24 (57)	9.57 (243)	2.05 (52)	3/8 (10)	2.28 (58)

*S denotes SOLID wire, and T denotes STRANDED wire

HT

Bronze Bolted Tee
Tube Main to Tube Tap
230kV and Below

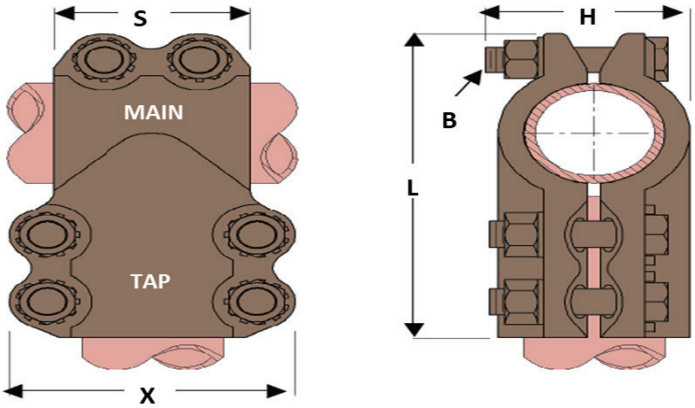

Copper alloy tee to connect tube in the main and tube in the tap. Electrical joint compound is recommended for all tube contact surfaces.

CASTINGS: Copper Alloy

HARDWARE: Silicone Bronze

See page 136 for special order options such as tin plating, hardware materials and specific angles. Contact PLP for further details, unlisted option and/or special applications.

Part Number	Main Tube NPS Diameter	Tap Tube NPS Diameter	Dimensions in (mm)				
	in (mm)	in (mm)	H	L	S	B	X
HT3534	3/8 (10)	1/4 (6)	1.22 (31)	3.43 (87)	1.26 (32)	3/8 (10)	2.13 (54)
HT3535	3/8 (10)	3/8 (10)	1.22 (31)	3.90 (99)	2.01 (51)	3/8 (10)	2.13 (54)
HT3636	1/2 (13)	1/2 (13)	1.22 (31)	3.90 (99)	2.01 (51)	3/8 (10)	2.36 (60)
HT3736	3/4 (19)	1/2 (13)	1.50 (38)	4.17 (106)	2.05 (52)	3/8 (10)	2.36 (60)
HT3737	3/4 (19)	3/4 (19)	1.50 (38)	4.17 (106)	2.05 (52)	3/8 (10)	2.48 (63)
HT3837	1 (25)	3/4 (19)	1.89 (48)	4.37 (111)	2.05 (52)	3/8 (10)	2.48 (63)
HT3838	1 (25)	1 (25)	1.89 (48)	4.37 (111)	2.05 (52)	3/8 (10)	2.87 (73)
HT3937	1-1/4 (32)	3/4 (19)	2.44 (62)	4.57 (116)	2.05 (52)	3/8 (10)	2.48 (63)
HT3938	1-1/4 (32)	1 (25)	2.44 (62)	4.57 (116)	2.05 (52)	3/8 (10)	2.87 (73)
HT3939	1-1/4 (32)	1-1/4 (32)	2.44 (62)	5.55 (141)	2.76 (70)	1/2 (13)	3.62 (92)
HT3940	1-1/4 (32)	1-1/2 (38)	2.60 (66)	5.51 (140)	2.76 (70)	1/2 (13)	3.90 (99)
HT3942	1-1/4 (32)	2-1/2 (64)	3.90 (99)	5.51 (140)	3.54 (90)	1/2 (13)	5.24 (133)
HT4036	1-1/2 (38)	1/2 (13)	2.44 (62)	5.20 (132)	2.01 (51)	3/8 (10)	2.48 (63)
HT4037	1-1/2 (38)	3/4 (19)	2.44 (62)	5.20 (132)	2.01 (51)	3/8 (10)	2.48 (63)
HT4038	1-1/2 (38)	1 (25)	2.44 (62)	4.96 (126)	2.01 (51)	3/8 (10)	2.87 (73)
HT4039	1-1/2 (38)	1-1/4 (32)	2.44 (62)	5.83 (148)	2.72 (69)	1/2 (13)	3.62 (92)
HT4040	1-1/2 (38)	1-1/2 (38)	2.60 (66)	5.83 (148)	2.72 (69)	1/2 (13)	3.90 (99)

*S denotes SOLID wire, and T denotes STRANDED wire

HT CONTINUED

Bronze Bolted Tee Tube Main to Tube Tap 230kV and Below

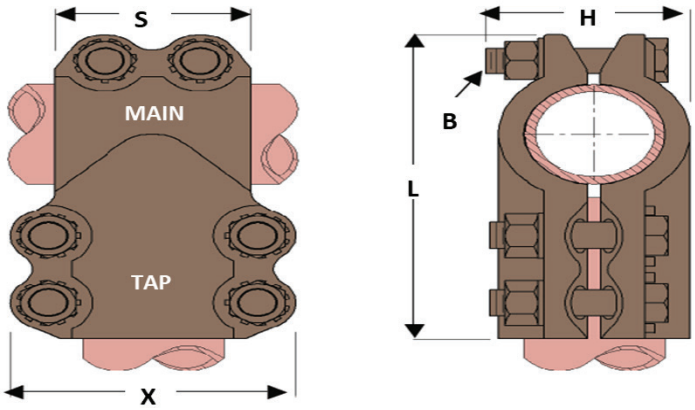

Part Number	Main Tube NPS Diameter	Tap Tube NPS Diameter	Dimensions in (mm)				
	in (mm)	in (mm)	H	L	S	B	X
HT4141	2 (51)	2 (51)	3.15 (80)	6.65 (169)	2.72 (69)	1/2 (13)	4.65 (118)
HT4239	2-1/2 (64)	1-1/4 (32)	3.90 (99)	6.93 (176)	2.72 (69)	1/2 (13)	3.62 (92)
HT4240	2-1/2 (64)	1-1/2 (38)	3.90 (99)	6.93 (176)	2.72 (69)	1/2 (13)	3.90 (99)
HT4241	2-1/2 (64)	2 (51)	3.90 (99)	6.93 (176)	2.72 (69)	1/2 (13)	4.65 (118)
HT4242	2-1/2 (64)	2-1/2 (64)	3.90 (99)	7.17 (182)	3.07 (78)	1/2 (13)	5.24 (133)
HT4338	3 (76)	1 (25)	4.21 (107)	7.01 (178)	2.01 (51)	3/8 (10)	2.87 (73)
HT4339	3 (76)	1-1/4 (32)	4.33 (110)	7.48 (190)	2.72 (69)	1/2 (13)	3.62 (92)
HT4340	3 (76)	1-1/2 (38)	4.33 (110)	7.48 (190)	2.72 (69)	1/2 (13)	3.82 (97)
HT4341	3 (76)	2 (51)	4.33 (110)	7.76 (197)	3.27 (83)	1/2 (13)	4.65 (118)
HT4343	3 (76)	3 (76)	4.33 (110)	8.54 (217)	4.25 (108)	1/2 (13)	6.22 (158)
HT4441	3-1/2 (89)	2 (51)	5.00 (127)	8.15 (207)	3.27 (83)	1/2 (13)	4.65 (118)
HT4444	3-1/2 (89)	3-1/2 (89)	5.00 (127)	8.90 (226)	4.69 (119)	5/8 (16)	6.89 (175)
HT4545	4 (102)	4 (102)	5.43 (138)	10.59 (269)	4.88 (124)	5/8 (16)	7.40 (188)
HT4747	5 (127)	5 (127)	6.69 (170)	12.48 (317)	5.00 (127)	5/8 (16)	8.50 (216)

HT

Bronze Bolted Tee
Cable Main to Cable Tap
230kV and Below

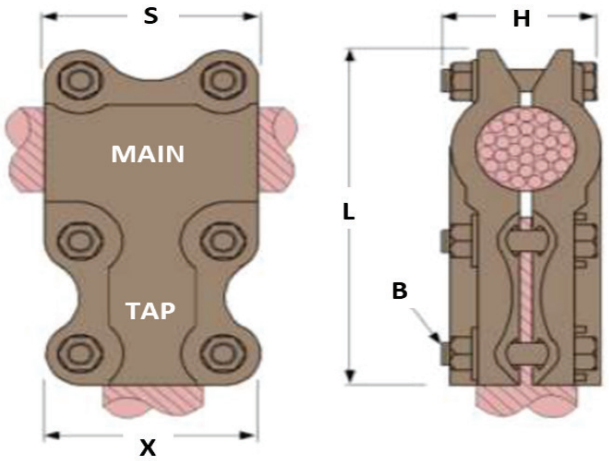

Copper alloy tee to connect cable in the main and cable in the tap. Electrical joint compound is recommended for all cable contact surfaces.

CASTINGS: Copper Alloy

HARDWARE: Silicone Bronze

See page 136 for special order options such as tin plating, hardware materials and specific angles. Contact PLP for further details, unlisted option and/or special applications.

Part Number	Main Cable AWG/MCM	Main Cable Diameter	Tap Cable AWG/MCM	Tap Cable Diameter	Dimensions				
					in (mm)				
		in (mm)		in (mm)	H	L	S	B	X
HT1110	2/0T(*)	.419 (10.6)	1/0T(*)	.372 (9.4)	1.54 (39)	3.07 (78)	1.38 (35)	3/8 (10)	1.77 (45)
HT1111	2/0T(*)	.419 (10.6)	2/0T(*)	.419 (10.6)	1.54 (39)	3.07 (78)	1.38 (35)	3/8 (10)	2.01 (51)
HT122T	3/0T(*)	.470 (11.9)	2T(*)	.292 (7.4)	1.54 (39)	3.07 (78)	1.38 (35)	3/8 (10)	2.01 (51)
HT1212	3/0T(*)	.470 (11.9)	3/0T(*)	.470 (11.9)	1.54 (39)	3.07 (78)	1.38 (35)	3/8 (10)	2.01 (51)
HT1310	4/0T(*)	.528 (13.4)	1/0T(*)	.372 (9.4)	1.54 (39)	3.07 (78)	1.38 (35)	3/8 (10)	2.01 (51)
HT1311	4/0T(*)	.528 (13.4)	2/0T(*)	.419 (10.6)	1.54 (39)	3.07 (78)	1.38 (35)	3/8 (10)	2.01 (51)
HT1313	4/0T(*)	.528 (13.4)	4/0T(*)	.528 (13.4)	1.54 (39)	3.39 (86)	2.01 (51)	3/8 (10)	2.01 (51)
HT1410	250	.575 (14.6)	1/0T(*)	.372 (9.4)	1.54 (39)	3.19 (81)	1.38 (35)	3/8 (10)	1.77 (45)
HT1413	250	.575 (14.6)	4/0T(*)	.528 (13.4)	1.54 (39)	3.74 (95)	2.05 (52)	3/8 (10)	2.13 (54)
HT1414	250	.575 (14.6)	250	.575 (14.6)	1.54 (39)	3.74 (95)	2.05 (52)	3/8 (10)	2.13 (54)
HT1513	300	.630 (16.0)	4/0T(*)	.528 (13.4)	1.54 (39)	3.54 (90)	2.05 (52)	3/8 (10)	2.01 (51)
HT1515	300	.630 (16.0)	300	.630 (16.0)	1.54 (39)	3.74 (95)	2.05 (52)	3/8 (10)	2.13 (54)
HT1717	400	.728 (18.5)	400	.728 (18.5)	1.77 (45)	3.90 (99)	2.05 (52)	3/8 (10)	2.13 (54)
HT1913	500	.814 (20.7)	4/0T(*)	.528 (13.4)	1.77 (45)	3.90 (99)	2.05 (52)	3/8 (10)	2.01 (51)
HT1914	500	.814 (20.7)	250	.575 (14.6)	1.77 (45)	3.90 (99)	2.05 (52)	3/8 (10)	2.13 (54)

*S denotes SOLID wire, and T denotes STRANDED wire

HT CONTINUED

Bronze Bolted Tee
Cable Main to Cable Tap
230kV and Below

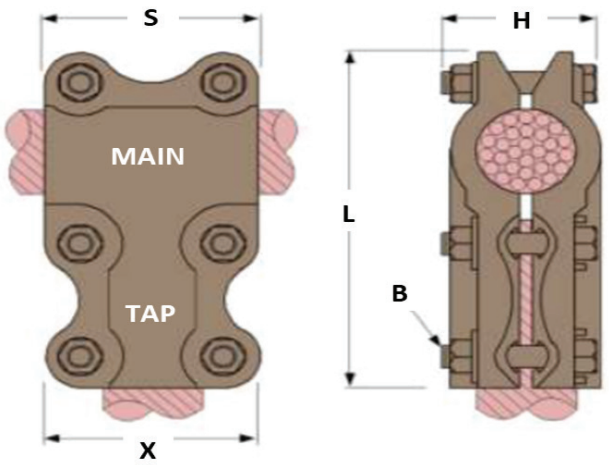

Part Number	Main Cable AWG/MCM	Main Cable Diameter	Tap Cable AWG/MCM	Tap Cable Diameter	Dimensions in (mm)				
		in (mm)		in (mm)	H	L	S	B	X
HT1915	500	.814 (20.7)	300	.630 (16.0)	1.77 (45)	3.90 (99)	2.05 (52)	3/8 (10)	2.13 (54)
HT1916	500	.814 (20.7)	350	.681 (17.3)	1.77 (45)	3.90 (99)	2.05 (52)	3/8 (10)	2.13 (54)
HT1919	500	.814 (20.7)	500	.814 (20.7)	1.77 (45)	3.90 (99)	2.05 (52)	3/8 (10)	2.28 (58)
HT2113	600	.893 (22.7)	4/0T(*)	.528 (13.4)	1.77 (45)	3.90 (99)	2.05 (52)	3/8 (10)	2.01 (51)
HT2119	600	.893 (22.7)	500	.814 (20.7)	1.77 (45)	4.17 (106)	2.05 (52)	3/8 (10)	2.44 (62)
HT2121	600	.893 (22.7)	600	.893 (22.7)	1.77 (45)	4.17 (106)	2.05 (52)	3/8 (10)	2.44 (62)
HT2411	750	.998 (25.3)	2/0T(*)	.419 (10.6)	2.28 (58)	3.31 (84)	1.38 (35)	3/8 (10)	2.01 (51)
HT2412	750	.998 (25.3)	3/0T(*)	.470 (11.9)	2.28 (58)	3.90 (99)	2.01 (51)	3/8 (10)	2.01 (51)
HT2413	750	.998 (25.3)	4/0T(*)	.528 (13.4)	2.28 (58)	3.90 (99)	2.01 (51)	3/8 (10)	2.01 (51)
HT2414	750	.998 (25.3)	250	.575 (14.6)	2.28 (58)	3.90 (99)	2.01 (51)	3/8 (10)	2.13 (54)
HT2415	750	.998 (25.3)	300	.630 (16.0)	2.28 (58)	3.90 (99)	2.01 (51)	3/8 (10)	2.13 (54)
HT2417	750	.998 (25.3)	400	.728 (18.5)	2.28 (58)	3.90 (99)	2.01 (51)	3/8 (10)	2.13 (54)
HT2419	750	.998 (25.3)	500	.814 (20.7)	2.28 (58)	4.33 (110)	2.01 (51)	3/8 (10)	2.44 (62)
HT2424	750	.998 (25.3)	750	.998 (25.3)	2.28 (58)	4.09 (104)	2.01 (51)	3/8 (10)	2.44 (62)
HT2814	1000	1.152 (29.3)	250	.575 (14.6)	1.97 (50)	4.17 (106)	2.05 (52)	3/8 (10)	2.44 (62)
HT2828	1000	1.152 (29.3)	1000	1.152 (29.3)	2.28 (58)	5.20 (132)	2.91 (74)	1/2 (13)	3.15 (80)

*S denotes SOLID wire, and T denotes STRANDED wire

HT

Bronze Bolted Tee
Tube Main to Cable Tap
230kV and Below

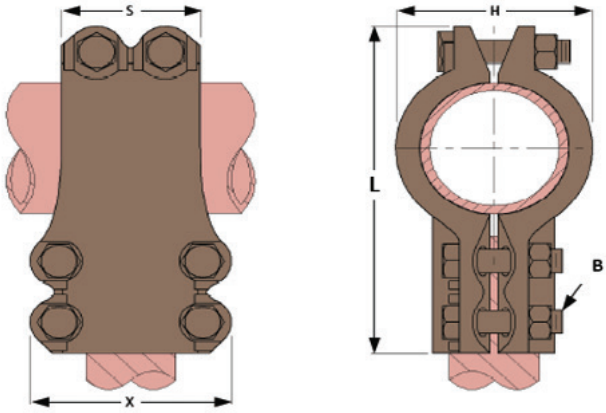

Copper alloy tee to connect tube in the main and cable in the tap. Electrical joint compound is recommended for all tube/cable contact surfaces.

CASTINGS: Copper Alloy

HARDWARE: Silicone Bronze

See page 136 for special order options such as tin plating, hardware materials and specific angles. Contact PLP for further details, unlisted option and/or special applications.

Part Number	NPS Tube Diameter	Cable AWG/MCM	Cable Diameter	Dimensions in (mm)				
	in (mm)		in (mm)	H	L	S	B	X
HT3719	3/4 (19)	500	.814 (20.7)	2.20 (56)	4.76 (121)	2.05 (52)	3/8 (10)	2.44 (62)
HT3813	1 (25)	4/0T(*)	.528 (13.4)	1.89 (48)	4.29 (109)	2.05 (52)	3/8 (10)	2.13 (54)
HT3814	1 (25)	250	.575 (14.6)	1.89 (48)	4.29 (109)	2.05 (52)	3/8 (10)	2.13 (54)
HT3815	1 (25)	300	.630 (16.0)	1.89 (48)	4.29 (109)	2.05 (52)	3/8 (10)	2.13 (54)
HT3819	1 (25)	500	.814 (20.7)	1.89 (48)	4.76 (121)	2.05 (52)	3/8 (10)	2.44 (62)
HT3824	1 (25)	750	.998 (25.3)	1.89 (48)	4.84 (123)	2.05 (52)	3/8 (10)	2.44 (62)
HT3911	1-1/4 (32)	2/0T(*)	.419 (10.6)	2.32 (59)	4.29 (109)	1.38 (35)	3/8 (10)	2.20 (56)
HT3913	1-1/4 (32)	4/0T(*)	.528 (13.4)	2.32 (59)	4.65 (118)	2.05 (52)	3/8 (10)	2.13 (54)
HT3914	1-1/4 (32)	250	.575 (14.6)	2.32 (59)	4.65 (118)	2.05 (52)	3/8 (10)	2.13 (54)
HT3915	1-1/4 (32)	300	.630 (16.0)	2.32 (59)	4.57 (116)	2.05 (52)	3/8 (10)	2.13 (54)
HT3919	1-1/4 (32)	500	.814 (20.7)	2.32 (59)	4.96 (126)	2.05 (52)	3/8 (10)	2.44 (62)
HT3924	1-1/4 (32)	750	.998 (25.3)	2.32 (59)	5.12 (130)	2.05 (52)	3/8 (10)	2.44 (62)
HT4010	1-1/2 (38)	1/0T(*)	.372 (9.4)	2.48 (63)	4.92 (125)	2.05 (52)	3/8 (10)	2.13 (54)
HT4013	1-1/2 (38)	4/0T(*)	.528 (13.4)	2.48 (63)	4.92 (125)	2.05 (52)	3/8 (10)	2.13 (54)
HT4014	1-1/2 (38)	250	.575 (14.6)	2.48 (63)	4.92 (125)	2.05 (52)	3/8 (10)	2.13 (54)
HT4015	1-1/2 (38)	300	.630 (16.0)	2.48 (63)	4.92 (125)	2.05 (52)	3/8 (10)	2.13 (54)
HT4019	1-1/2 (38)	500	.814 (20.7)	2.48 (63)	5.39 (137)	2.05 (52)	3/8 (10)	2.44 (62)
HT4024	1-1/2 (38)	750	.998 (25.3)	2.48 (63)	5.20 (132)	2.05 (52)	3/8 (10)	2.44 (62)

*S denotes SOLID wire, and T denotes STRANDED wire

HT CONTINUED

Bronze Bolted Tee
Tube Main to Cable Tap
230kV and Below

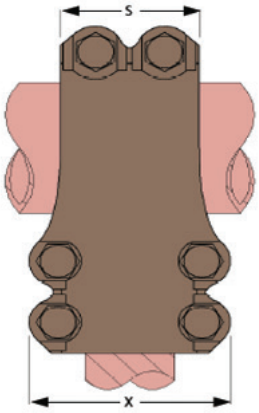

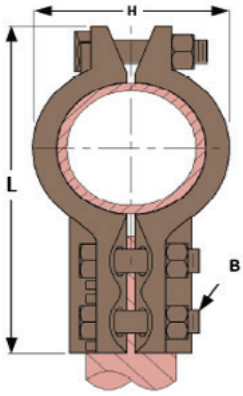

Part Number	NPS Tube Diameter	Cable AWG/MCM	Cable Diameter	Dimensions in (mm)				
	in (mm)		in (mm)	H	L	S	B	X
HT4028	1-1/2 (38)	1000	1.152 (29.3)	2.60 (66)	6.10 (155)	2.68 (68)	1/2 (13)	3.15 (80)
HT4113	2 (51)	4/0T(*)	.528 (13.4)	3.03 (77)	5.55 (141)	2.05 (52)	3/8 (10)	2.13 (54)
HT4114	2 (51)	250	.575 (14.6)	3.03 (77)	5.55 (141)	2.05 (52)	3/8 (10)	2.13 (54)
HT4115	2 (51)	300	.630 (16.0)	3.03 (77)	5.55 (141)	2.05 (52)	3/8 (10)	2.13 (54)
HT4119	2 (51)	500	.814 (20.7)	3.03 (77)	5.94 (151)	2.05 (52)	3/8 (10)	2.44 (62)
HT4121	2 (51)	600	.893 (22.7)	3.03 (77)	6.30 (160)	2.05 (52)	3/8 (10)	2.44 (62)
HT4128	2 (51)	1000	1.152 (29.3)	3.03 (77)	6.69 (170)	2.68 (68)	1/2 (13)	3.15 (80)
HT4214	2-1/2 (64)	250	.575 (14.6)	3.66 (93)	5.98 (152)	2.05 (52)	3/8 (10)	2.13 (54)
HT4215	2-1/2 (64)	300	.630 (16.0)	3.66 (93)	5.98 (152)	2.05 (52)	3/8 (10)	2.13 (54)
HT4219	2-1/2 (64)	500	.814 (20.7)	3.66 (93)	6.18 (157)	2.05 (52)	3/8 (10)	2.44 (62)
HT4228	2-1/2 (64)	1000	1.152 (29.3)	3.82 (97)	7.05 (179)	2.68 (68)	1/2 (13)	3.15 (80)
HT4319	3 (76)	500	.814 (20.7)	4.17 (106)	7.56 (192)	2.05 (52)	3/8 (10)	2.44 (62)
HT4321	3 (76)	600	.893 (22.7)	4.17 (106)	7.36 (187)	2.05 (52)	3/8 (10)	2.44 (62)
HT4324	3 (76)	750	.998 (25.3)	4.17 (106)	7.40 (188)	2.05 (52)	3/8 (10)	2.44 (62)
HT4328	3 (76)	1000	1.152 (29.3)	4.33 (110)	7.76 (197)	3.23 (82)	1/2 (13)	3.15 (80)

*S denotes SOLID wire, and T denotes STRANDED wire

CCDT

Aluminum Compression Tee
Cable to Cable
230kV and Below

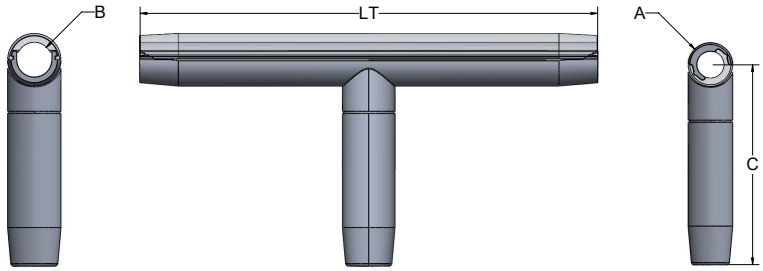

Aluminum alloy compression tee for connecting cable to cable. Electrical joint compound is recommended for all cable contact surfaces.

CASTINGS: Aluminum Alloy

See page 136 for special order options such as tin plating, hardware materials and specific angles. Contact PLP for further details, unlisted option and/or special applications.

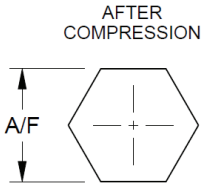

Part Number	Cable Size in (mm)	Dimensions in (mm)					Compression Die
		A	B	C	LT	A/F	
CCDT-22	0.787 - 0.905 (20.0 - 23.0)	1.46 (37)	0.92 (23)	7.25 (184)	17.00 (432)	1.248 (31.7)	DC-32
CCDT-26	0.944 - 1.023 (24.0 - 26.0)	1.69 (43)	1.04 (26)	7.52 (191)	17.50 (444)	1.417 (36.0)	DC-36
CCDT-28	1.023 - 1.102 (26.0 - 28.0)	1.81 (46)	1.17 (30)	7.87 (200)	17.75 (451)	1.575 (40.0)	DC-40
CCDT-30	1.141 - 1.181 (29.0 - 30.0)	2.05 (52)	1.35 (34)	8.00 (203)	17.75 (451)	1.693 (43.0)	DC-42
CCDT-32	1.181 - 1.259 (30.0 - 32.0)	2.05 (52)	1.35 (34)	8.00 (203)	17.75 (451)	1.732 (44.0)	DC-44
CCDT-22HT	0.787 - 0.905 (20.0 - 23.0)	1.46 (37)	0.92 (23)	11.00 (279)	24.50 (622)	1.248 (31.7)	DC-32
CCDT-26HT	0.944 - 1.023 (24.0 - 26.0)	1.69 (43)	1.04 (26)	11.50 (292)	26.00 (660)	1.417 (36.0)	DC-36
CCDT-28HT	1.023 - 1.102 (26.0 - 28.0)	1.81 (46)	1.17 (30)	12.00 (305)	25.50 (648)	1.575 (40.0)	DC-40
CCDT-30HT	1.141 - 1.181 (29.0 - 30.0)	2.05 (52)	1.35 (34)	12.00 (305)	25.50 (648)	1.693 (43.0)	DC-42
CCDT-32HT	1.181 - 1.259 (30.0 - 32.0)	2.05 (52)	1.35 (34)	12.00 (305)	25.50 (648)	1.732 (44.0)	DC-44

CCDTN4

Aluminum Compression Tee
Cable to Pad
230kV and Below

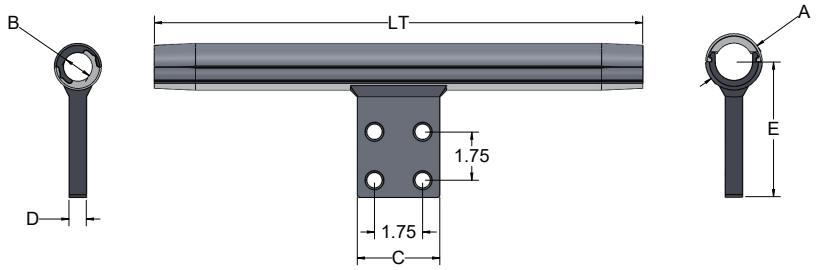

Aluminum alloy compression tee for connecting cable to a flat pad. Electrical joint compound is recommended for all cable/flat contact surfaces.

CASTINGS: Aluminum Alloy

See page 136 for special order options such as tin plating, hardware materials and specific angles. Contact PLP for further details, unlisted option and/or special applications.

AFTER COMPRESSION

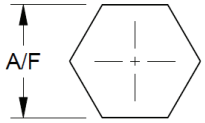

Part Number	Cable Size in (mm)	Dimensions in (mm)							Compression Die
		A	B	C	D	E	LT	A/F	
CCDTN4-22	0.787 - 0.905 (20.0 - 23.0)	1.46 (37)	0.91 (23)	3.00 (76)	0.63 (16)	4.61 (117)	17.01 (432)	1.244 (31.6)	DC-32
CCDTN4-28	1.023 - 1.141 (26.0 - 29.0)	1.81 (46)	1.81 (46)	3.00 (76)	0.63 (16)	4.76 (121)	17.76 (451)	1.575 (40)	DC-40
CCDTN4-32	1.181 - 1.299 (30.0 - 33.0)	2.05 (52)	1.34 (34)	3.00 (76)	0.63 (16)	4.88 (124)	17.76 (451)	1.732 (44)	DC-44
CCDTN4-38	1.417 - 1.574 (36.0 - 40.0)	2.60 (66)	1.57 (40)	3.00 (76)	0.63 (16)	4.92 (125)	23.62 (451)	2.244 (57)	DC-57
CCDTN4-22HT	0.787 - 0.905 (20.0 - 23.0)	1.46 (37)	0.91 (23)	3.86 (98)	0.79 (20)	5.24 (133)	24.49 (622)	1.244 (31.6)	DC-32
CCDTN4-28HT	1.023 - 1.141 (26.0 - 29.0)	1.81 (46)	1.18 (30)	3.86 (98)	0.79 (20)	5.39 (137)	25.51 (648)	1.575 (40)	DC-40
CCDTN4-32HT	1.181 - 1.299 (30.0 - 33.0)	2.05 (52)	1.34 (34)	3.86 (98)	0.79 (20)	5.51 (140)	25.51 (648)	1.732 (44)	DC-44
CCDTN4-38HT	1.417 - 1.574 (36.0 - 40.0)	2.60 (66)	1.57 (40)	3.86 (98)	0.79 (20)	5.59 (142)	30.91 (785)	2.244 (57)	DC-57

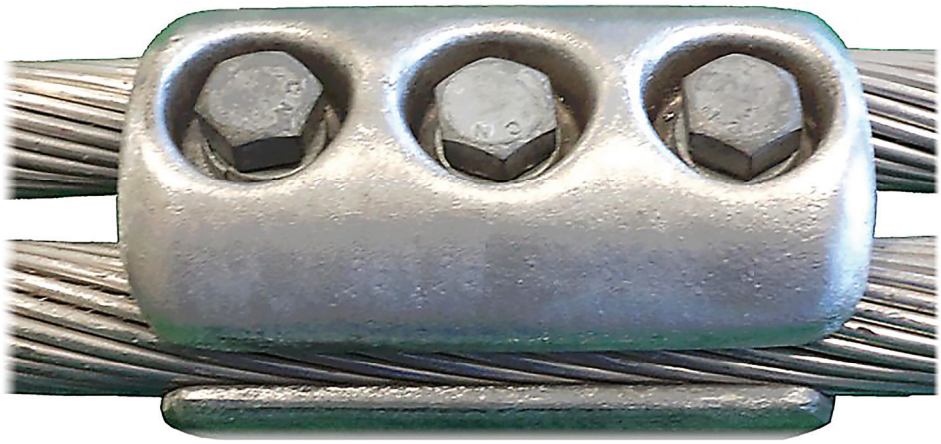

SECTION 4

PARALLEL CONNECTORS

SUBSTATION CONNECTORS - 230KV AND BELOW

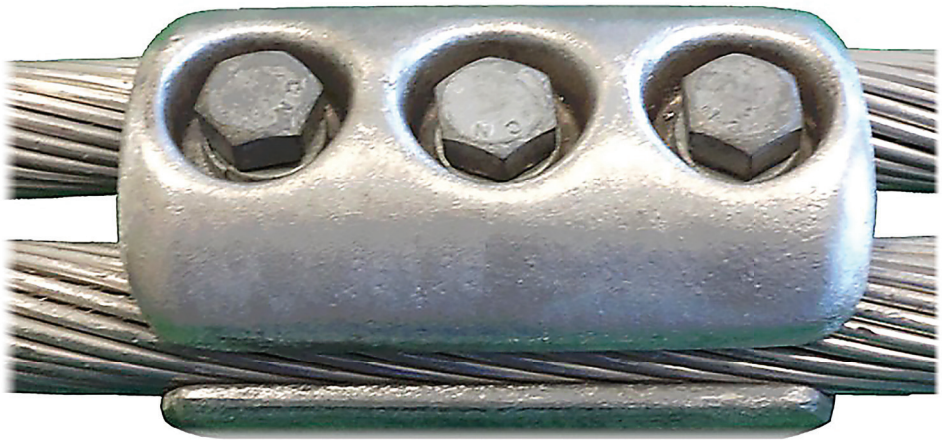

PARALLEL CONNECTORS

PLP **Substation Connectors Parallel Connectors** for 230kV and below are designed with a wide range of conduct acceptance for both main and tap and can be used for ACSR and AAC substation flexible conductor. Typically used for non-current carrying connections to voltage transformers and surge arrestors and are suitable for both equal and unequal conductor combinations. All contact faces are manufactured to maximize contact surface area and provide a superior installed fit.

FEATURES AND BENEFITS

- Complete range of sizes for connecting most standard bus tube or stranded conductor
- Solutions for bolted, compression, and weldment applications
- Available in aluminum and bronze, with tin plating capabilities for both materials
- Custom design solutions available to secure your most challenging connections

EGP-A

Aluminum Bolted Parallel Conductor
Two Cable
230kV and Below

Aluminum alloy parallel clamp to connect cable in the main and cable in the tap. Electrical joint compound is recommended for all cable contact surfaces.

CASTINGS: Aluminum Alloy

HARDWARE: Galvanized Steel

See page 136 for special order options such as tin plating, hardware materials and specific angles. Contact PLP for further details, unlisted option and/or special applications.

Example: EGP21A with Stainless Steel Hardware would be EGP21A-SS.

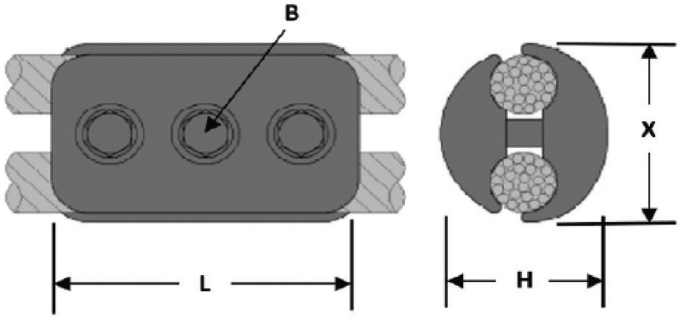

Part Number	Cable AWG/MCM				Tap Cable AWG/MCM				Dimensions in (mm)			
	AAC	AAC Diameter in (mm)	ACSR	ACSR Diameter in (mm)	AAC	AAC Diameter in (mm)	ACSR	ACSR Diameter in (mm)	H	L	B	X
EGP21A	500 - 600	0814 - 0.893 (20.7 - 22.7)	477 (18/1) - 477 (30/7)	0.814 - 0.883 (20.7 - 22.4)	500 - 600	0.814 - 0.893 (20.7 - 22.7)	477 (18/1) - 477 (30/7)	0.814 - 0.883 (20.7 - 22.4)	2.91 (74)	6.22 (158)	5/8 (16)	4.06 (103)
EGP29A	900 - 1300	1.094 - 1.315 (27.8 - 33.4)	795 (54/7) - 1192 (54/19)	1.093 - 1.338 (27.8 - 34.0)	900 - 1300	1.094 - 1.315 (27.8 - 33.4)	795 (54/7) - 1192 (54/19)	1.093 - 1.338 (27.8 - 34.0)	3.35 (85)	6.22 (158)	5/8 (16)	4.06 (103)
EGP30A	1431 - 1590	1.382 - 1.454 (35.1 - 36.9)	1272 (54/19) - 1431 (54/19)	1.382 - 1.465 (35.1 - 37.2)	1431 - 1590	1.382 - 1.454 (35.1 - 36.9)	1272 (54/19) - 1431 (54/19)	1.382 - 1.465 (35.1 - 37.2)	3.90 (99)	7.17 (182)	5/8 (16)	4.57 (116)
EGP32A	1750 - 2000	1.526 - 1.632 (38.8 - 41.5)	1590 (54/19) - 1780 (84/19)	1.545 - 1.602 (39.2 - 40.7)	1750 - 2000	1.526 - 1.632 (38.8 - 41.5)	1590 (54/19) - 1780 (84/19)	1.545 - 1.602 (39.2 - 40.7)	4.21 (107)	7.17 (182)	5/8 (16)	4.57 (116)
EGP29A21A	900 - 1300	1.094 - 1.315 (27.8 - 33.4	795 (54/7) - 1192 (54/19)	1.093 - 1.338 (27.8 - 34.0)	500 - 600	0.814 - 0.893 (20.7 - 22.7)	477 (18/1) - 477 (30/7)	0.814 - 0.883 (20.7 - 22.4)	3.35 (85)	6.26 (159)	5/8 (16)	4.06 (103)
EGP29A24A	900 - 1300	1.094 - 1.315 (27.8 - 33.4	795 (54/7) - 1192 (54/19)	1.093 - 1.338 (27.8 - 34.0)	636 - 750	0.918 - 0.998 (23.3 - 25.3)	556 (18/1) - 666 (24/7)	0.879 - 1.000 (22.3 - 25.4)	3.35 (85)	6.26 (159)	5/8 (16)	4.06 (103)
EGP30A29A	1431 - 1590	1.382 - 1.454 (35.1 - 36.9)	1272 (54/19) - 1431 (54/19)	1.382 - 1.465 (35.1 - 37.2)	900 - 1300	1.094 - 1.315 (27.8 - 33.4)	795 (54/7) - 1192 (54/19)	1.093 - 1.338 (27.8 - 34.0)	4.21 (107)	7.17 (182)	5/8 (16)	4.57 (116)
EGP32A29A	1750 - 2000	1.526 - 1.632 (38.8 - 41.5)	1590 (54/19) - 1780 (84/19)	1.545 - 1.602 (39.2 - 40.7)	900 - 1300	1.094 - 1.315 (27.8 - 33.4)	795 (54/7) - 1192 (54/19)	1.093 - 1.338 (27.8 - 34.0)	4.21 (107)	7.17 (182)	5/8 (16)	4.57 (116)

MP-R

Aluminum Bolted Parallel Connector
Two Cable, U-Bolt
230kV and Below

Aluminum alloy parallel clamp to connect cable in the main and cable in the tap. Electrical joint compound is recommended for all cable contact surfaces.

CASTINGS: Aluminum Alloy

HARDWARE: Zinc Plated Steel

See page 136 for special order options such as tin plating, hardware materials and specific angles. Contact PLP for further details, unlisted option and/or special applications.

Example: MP19R with Stainless Steel Hardware would be MP19R-SS.

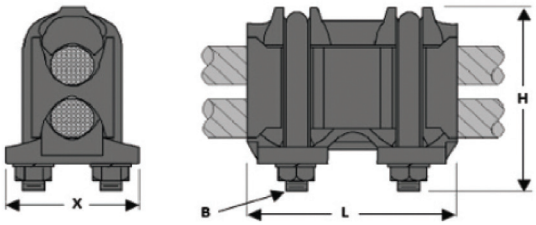

Fig. 1

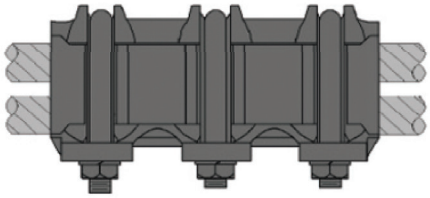

Fig. 2

Part Number	Figure	Cable AWG/MCM				Tap Cable AWG/MCM				Dimensions in (mm)			
		AAC	AAC Diameter in (mm)	ACSR	ACSR Diameter in (mm)	AAC	AAC Diameter in (mm)	ACSR	ACSR Diameter in (mm)	H	L	B	X
MP19R	1	3/0T-400	0.470 - 0.728 (11/9 - 18.5)	2/0 (6/1) - 397 (26/7)	0.447 - 0.783 (11.4 - 19.9)	3/0T - 400	0.470 - 0.728 (11.9 - 18.5)	2/0 - (6/1) - 397 (26/7)	0.447 - 0.783 (11.4 - 19.9)	5.04 (128)	4.02 (102)	1/2 (13)	2.80 (71)
MP30R21R	1	397 - 954	0.724 - 1.126 (18.4 - 28.6)	336 (30/7) - 795 (30/19)	0.741 - 1.140 (18.8 - 29.0)	3/0T - 500	0.470 - 0.814 (11.9 - 20.7)	110 (12/7) - 477 (18/1)	0.741 - 1.140 (18.8 - 29.0)	5.67 (144)	4.02 (102)	1/2 (13)	2.87 (73)
MP30R	1	397 - 954	0.724 - 1.126 (18.4 - 28.6)	336 (30/7) - 795 (30/19)	0.741 - 1.140 (18.8 - 29.0)	397 - 954	0.724 - 1.126 (18.4 - 28.6)	336 (30/7) - 795 (30/19)	0.741 - 1.140 (18.8 - 29.0)	6.54 (166)	4.45 (113)	5/8 (16)	3.27 (83)
MP32R-M1	2	750 - 1033	0.998 - 1.171 (25.3 - 34.0)	605 (54/7) - 900 (54/7)	0.953 - 1.162 (24.2 - 29.5)	750 - 1033	0.998 - 1.171 (25.3 - 29.7)	605 (54/7) - 900 (54/7)	0.953 - 1.162 (24.2 - 29.5)	6.54 (166)	7.01 (178)	5/8 (16)	3.70 (94)
MP35R	2	1000 - 1351	1.152 - 1.340 (29.3 - 34.0)	900 (54/7) - 1192 (45/7)	1.162 - 1.302 (29.5 - 33.1)	1000 - 1351	1.152 - 1.340 (29.3 - 34.0)	900 (54/7) - 1192 (45/7)	1.162 - 1.302 (29.5 - 33.1)	6.77 (172)	7.17 (182)	5/8 (16)	3.70 (94)
MP35R30R	2	1000 - 1351	1.152 - 1.340 (29.3 - 34.0)	900 (54/7) - 1192 (45/7)	1.162 - 1.302 (29.5 - 33.1)	397 - 954	0.724 - 1.126 (18.4 - 28.6)	336 (30/7) - 795 (30/19)	1.162 - 1.302 (29.5 - 33.1)	6.77 (172)	7.17 (182)	5/8 (16)	3.70 (94)

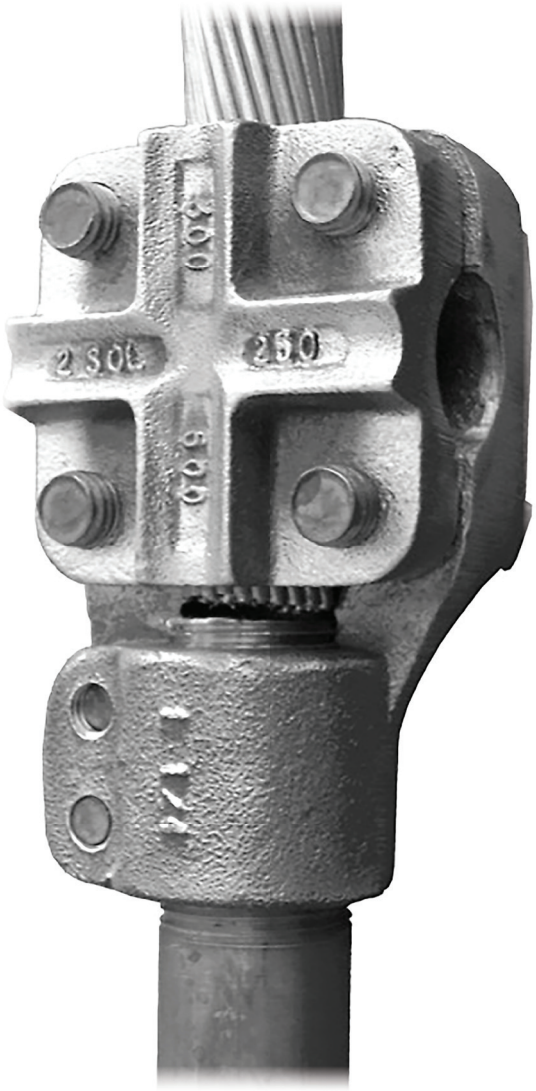

SECTION 5

STUD CONNECTORS

SUBSTATION CONNECTORS - 230KV AND BELOW

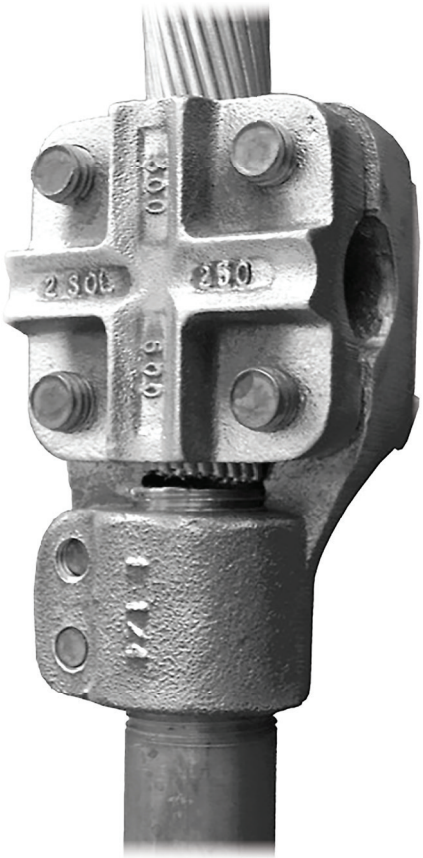

STUD CONNECTORS

PLP **Substation Connectors Stud Connectors** for 230kV and below are an easy to install means of making a connection between a single flexible conductor or bus tube and an item of substation primary equipment which features a round smooth or threaded stud terminal. All contact faces are manufactured to maximize contact surface area and provide a superior installed fit.

FEATURES AND BENEFITS

- Complete range of sizes for connecting most standard bus tube or stranded conductor
- Solutions for bolted, compression, and weldment applications
- Available in aluminum and bronze, with tin plating capabilities for both materials
- Custom design solutions available to secure your most challenging connections

HP-A

Aluminum Bolted Stud Connector
Stud to Tube
230kV and Below

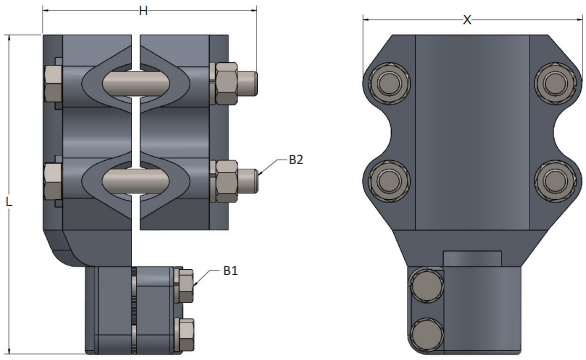

Aluminum alloy connector to be installed on smooth or threaded stud. Electrical joint compound is recommended for all stud/tube contact surfaces.

CASTINGS: Aluminum Alloy

HARDWARE: Galvanized Steel

See page 136 for special order options such as tin plating, hardware materials and specific angles. Contact PLP for further details, unlisted option and/or special applications.

When ordering, please specify if stud is smooth or threaded with the 'C' suffix followed by the number of threads per inch.

Example of smooth stud: HP5737AC0

Example of stud with 12 threads per inch: HP5737AC12

Part Number	Stud Diameter	Tube NPS Diameter	Dimensions				
	in (mm)	in (mm)	in (mm)				
			H	L	B1	B2	X
HP5737AC12	1 (25)	3/4 (19)	3.31 (84)	6.02 (153)	1/2 (13)	1/2 (13)	2.80 (71)
HP5740AC12	1 (25)	1-1/2 (38)	3.82 (97)	6.69 (170)	1/2 (13)	1/2 (13)	3.70 (94)
HP5741AC12	1 (25)	2 (51)	4.41 (112)	6.85 (174)	1/2 (13)	5/8 (16)	4.57 (116)
HP5742AC12	1 (25)	2-1/2 (64)	4.92 (125)	7.24 (184)	1/2 (13)	5/8 (16)	5.00 (127)
HP5743AC12	1 (25)	3 (76)	5.43 (138)	7.87 (200)	1/2 (13)	5/8 (16)	5.47 (139)
HP57537AC12	1-1/8 (29)	3/4 (19)	3.31 (84)	6.02 (153)	1/2 (13)	1/2 (13)	2.80 (71)
HP57540AC12	1-1/8 (29)	1-1/2 (38)	3.82 (97)	6.69 (170)	1/2 (13)	1/2 (13)	3.70 (94)
HP57541AC12	1-1/8 (29)	2 (51)	4.41 (112)	6.85 (174)	1/2 (13)	5/8 (16)	4.57 (116)
HP57542AC12	1-1/8 (29)	2-1/2 (64)	4.92 (125)	7.24 (184)	1/2 (13)	5/8 (16)	5.00 (127)
HP57543AC12	1-1/8 (29)	3 (76)	5.43 (138)	7.87 (200)	1/2 (13)	5/8 (16)	5.47 (139)
HP5837AC12	1-1/4 (32)	3/4 (19)	3.31 (84)	6.02 (153)	1/2 (13)	1/2 (13)	2.80 (71)
HP5840AC12	1-1/4 (32)	1-1/2 (38)	3.82 (97)	6.69 (170)	1/2 (13)	1/2 (13)	3.70 (94)
HP5841AC12	1-1/4 (32)	2 (51)	4.41 (112)	6.85 (174)	1/2 (13)	5/8 (16)	4.57 (116)
HP5842AC12	1-1/4 (32)	2-1/2 (64)	4.92 (125)	7.24 (184)	1/2 (13)	5/8 (16)	5.00 (127)
HP5843AC12	1-1/4 (32)	3 (76)	5.43 (138)	7.87 (200)	1/2 (13)	5/8 (16)	5.47 (139)
HP5938AC12	1-1/4 (32)	1 (25)	3.31 (84)	6.34 (161)	1/2 (13)	1/2 (13)	3.03 (77)

HP-A CONTINUED

Aluminum Bolted Stud Connector
Stud to Tube
230kV and Below

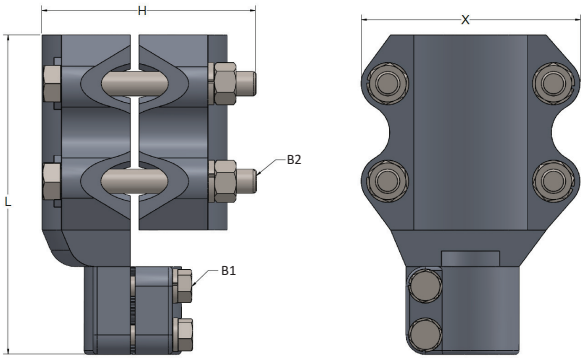

When ordering, please specify if stud is smooth or threaded with the 'C' suffix followed by the number of threads per inch.

Example of smooth stud: HP5939AC0

Example of stud with 12 threads per inch: HP5939AC12

Part Number	Stud Diameter	Tube NPS Diameter	Dimensions				
	in (mm)	in (mm)	in (mm)				
			H	L	B1	B2	X
HP5939AC12	1-1/2 (38)	1-1/4 (32)	2.95 (75)	6.65 (169)	1/2 (13)	1/2 (13)	3.27 (83)
HP5940AC12	1-1/2 (38)	1-1/2 (38)	3.82 (97)	6.89 (175)	1/2 (13)	1/2 (13)	3.70 (94)
HP5941AC12	1-1/2 (38)	2 (51)	4.41 (112)	7.01 (178)	1/2 (13)	5/8 (16)	4.57 (116)
HP5942AC12	1-1/2 (38)	2-1/2 (64)	4.92 (125)	7.24 (184)	1/2 (13)	5/8 (16)	5.00 (127)
HP5943AC12	1-1/2 (38)	3 (76)	5.43 (138)	8.19 (208)	1/2 (13)	5/8 (16)	5.47 (139)
HP59341AC12	1-5/8 (41)	2 (51)	4.41 (112)	7.68 (195)	1/2 (13)	5/8 (16)	4.57 (116)
HP6040AC12	2 (51)	1-1/2 (38)	3.82 (97)	7.09 (180)	1/2 (13)	1/2 (13)	3.70 (94)
HP6041AC12	2 (51)	2 (51)	4.41 (112)	7.68 (195)	1/2 (13)	5/8 (16)	4.57 (116)
HP6042AC12	2 (51)	2-1/2 (64)	4.92 (125)	8.00 (203)	1/2 (13)	5/8 (16)	5.00 (127)
HP6043AC12	2 (51)	3 (76)	5.43 (138)	8.43 (214)	1/2 (13)	5/8 (16)	5.47 (139)
HP6046AC12	2 (51)	4-1/2 (114)	6.77 (172)	9.72 (247)	1/2 (13)	5/8 (16)	7.13 (181)
HP6243AC12	3 (76)	3 (76)	5.43 (138)	8.43 (214)	5/8 (16)	5/8 (16)	5.47 (139)
HP6444AC12	4 (102)	3-1/2 (89)	5.59 (142)	9.13 (232)	5/8 (16)	5/8 (16)	6.18 (157)
HP6445AC12	4 (102)	4 (102)	6.18 (157)	9.72 (247)	5/8 (16)	5/8 (16)	6.69 (170)

HPR-A

Aluminum Bolted Stud Connector
Stud to Cable
230kV and Below

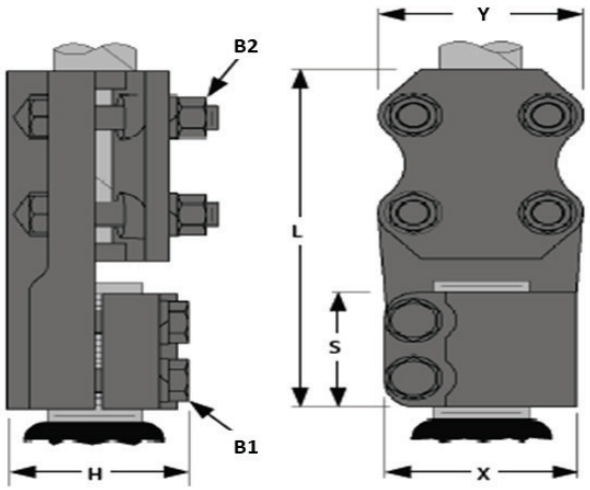

Aluminum alloy connector to be installed on smooth or threaded stud. Electrical joint compound is recommended for all stud/cable contact surface.

CASTINGS: Aluminum Alloy

HARDWARE: Galvanized Steel

See page 136 for special order options such as tin plating, hardware materials and specific angles. Contact PLP for further details, unlisted option and/or special applications.

When ordering, please specify if stud is smooth or threaded with the 'C' suffix followed by the number of threads per inch.

Example of smooth stud is HPR5521AC0.

Example of stud with 13 threads per inch is HPR5521AC13.

Part Number	Stud Diameter	Cable AWG/MCM				Dimensions						
		AAC	AAC Diameter	ACSR	ACSR Diameter	in (mm)						
	in (mm)		in (mm)		in (mm)	H	L	S	B1	B2	X	Y
HPR5521AC13	1/2 (13)	350 - 600	.681 - .893 (17.3 - 22.7)	336 (18/1) - 477 (30/7)	.684 - .883 (17.4 - 22.4)	2.52 (64)	5.98 (152)	2.32 (59)	1/2 (13)	1/2 (13)	2.68 (68)	2.67 (70)
HPR5529AC13	1/2 (13)	900 - 1250	1.094 - 1.289 (27.8 - 32.7)	715 (30/19) - 1113 (54/19)	1.081 - 1.293 (27.5 - 32.8)	2.52 (64)	6.81 (173)	2.32 (59)	1/2 (13)	1/2 (13)	2.68 (68)	3.19 (81)
HPR55514AC11	5/8 (16)	1/0T - 250*	0.372 - 0.575 (9.4 - 14.6)	1/0 (6/1) - 4/0 (6/1)	.398 - .563 (10.1 - 14.3)	2.52 (64)	5.51 (140)	2.32 (59)	1/2 (13)	1/2 (13)	2.68 (68)	2.48 (63)
HPR5617AC16	3/4 (19)	250 - 400	.575 - .728 (14.6 - 18.5)	4/0 (6/1) - 397 (26/7)	.563 - .783 (14.3 - 19.9)	2.52 (64)	5.98 (152)	2.32 (59)	1/2 (13)	1/2 (13)	2.68 (68)	2.64 (67)
HPR5621AC12	3/4 (19)	350 - 600	.681 - .893 (17.3 - 22.7)	336 (18/1) - 477 (30/7)	.684 - .883 (17.4 - 22.4)	2.52 (64)	5.98 (152)	2.32 (59)	1/2 (13)	1/2 (13)	2.68 (68)	2.76 (70)
HPR5627AC12	3/4 (19)	600 - 900	.893 - 1.094 (22.7 - 27.8)	47 (30/7) - 795 (54/7)	.883 - 1.093 (22.4 - 27.8)	2.52 (64)	6.57 (167)	2.32 (59)	1/2 (13)	1/2 (13)	2.68 (68)	3.00 (76)
HPR5629AC12	3/4 (19)	900 - 1250	1.094 - 1.289 (27.8 - 32.7)	715 (30/19) - 1113 (54/19)	1.081 - 1.293 (27.5 - 32.8)	2.52 (64)	6.81 (173)	2.32 (59)	1/2 (13)	1/2 (13)	2.68 (68)	3.19 (81)
HPR5714AC12	1 (25)	1/0T - 250*	.372 - .575 (9.4 - 14.6)	1/0 (6/1)- 4/0 (6/1)	.398 - .563 (10.1 - 14.3)	2.52 (64)	5.51 (140)	2.32 (59)	1/2 (13)	1/2 (13)	2.68 (68)	2.48 (63)
HPR5717AC12	1 (25)	250 - 400	.575 - .728 (14.6 - 18.5)	4/0 (6/1) - 397 (26/7)	.563 - .783 (14.3 - 19.9)	2.52 (64)	5.98 (152)	2.32 (59)	1/2 (13)	1/2 (13)	2.68 (68)	2.64 (67)
HPR5721AC12	1 (25)	350 - 600	.681 - .893 (17.3 - 22.7)	336 (18/1) - 477 (30/7)	.684 - .883 (17.4 - 22.4)	2.52 (64)	5.98 (158)	2.32 (59)	1/2 (13)	1/2 (13)	2.68 (68)	2.76 (70)
HPR5727AC12	1 (25)	600 - 900	.893 - 1.094 (22.7 - 27.8)	477 (30/7) - 795 (54/7)	.883 - 1.093 (22.4 - 27.8)	2.52 (64)	6.57 (167)	2.32 (59)	1/2 (13)	1/2 (13)	2.68 (68)	3.00 (76)
HPR5729AC12	1 (25)	900 - 1250	1.094 - 1.289 (27.8 - 32.7)	715 (30/19) - 1113 (54/19)	1.081 - 1.293 (27.5 - 32.8)	2.52 (64)	6.81 (173)	2.32 (59)	1/2 (13)	1/2 (13)	2.68 (68)	3.19 (81)
HPR57514AC12	1-1/8 (29)	1/0T - 250*	.372 - .575 (9.4 - 14.6)	1/0 (6/1) - 4/0 (6/1)	.398 - .563 (10.1 - 14.3)	2.52 (64)	5.51 (140)	2.32 (59)	1/2 (13)	1/2 (13)	2.68 (68)	2.48 (63)
HPR57517AC12	1-1/8 (29)	250 - 400	.575 - .728 (14.6 - 18.5)	4/0 (6/1) - 397 (26/7)	.563 - .783 (14.3 - 19.9)	2.52 (64)	5.98 (152)	2.32 (59)	1/2 (13)	1/2 (13)	2.68 (68)	2.64 (67)
HPR57521AC12	1-1/8 (29)	350 - 600	.681 - .893 (17.3 - 22.7)	336 (18/1) - 477 (30/7)	.684 - .883 (17.4 - 22.4)	2.52 (64)	5.98 (152)	2.32 (59)	1/2 (13)	1/2 (13)	2.68 (68)	2.76 (70)
HPR57527AC12	1-1/8 (29)	600 - 900	.893 - 1.094 (22.7 - 27.8)	477 (30/7) - 795 (54/7)	.883 - 1.093 (22.4 - 27.8)	2.52 (64)	6.57 (167)	2.32 (59)	1/2 (13)	1/2 (13)	2.68 (68)	3.00 (76)
HPR57529AC12	1-1/8 (29)	900 - 1250	1.094 - 1.289 (27.8 - 32.7)	715 (30/19) - 1113 (54/19)	1.081 - 1.293 (27.5 - 32.8)	2.52 (64)	6.81 (173)	2.32 (59)	1/2 (13)	1/2 (13)	2.68 (68)	3.19 (81)
HPR57829AC12	1-3/16 (30)	900 - 1250	1.094 - 1.289 (27.8 - 32.7)	715 (30/19) - 1113 (54/19)	1.081 - 1.293 (27.5 - 32.8)	2.52 (64)	6.81 (173)	2.32 (59)	1/2 (13)	1/2 (13)	2.68 (68)	3.19 (81)

*S denotes SOLID wire, and T denotes STRANDED wire

HPR-A CONTINUED

Aluminum Bolted Stud Connector
Stud to Cable
230kV and Below

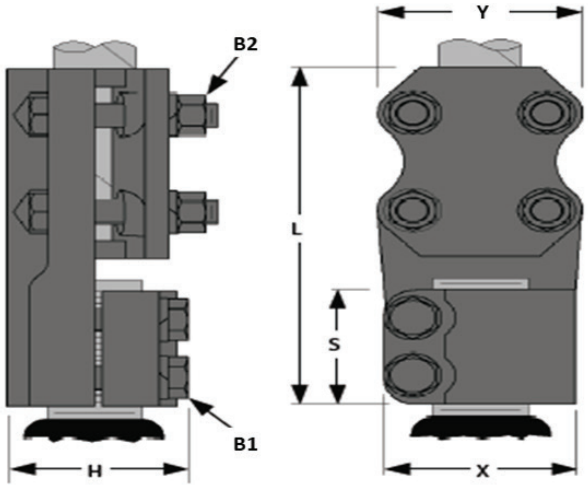

When ordering, please specify if stud is smooth or threaded with the 'C' suffix followed by the number of threads per inch.

Example of smooth stud is HPR5814AC0.

Example of stud with 12 threads per inch is HPR5814AC12.

Part Number	Stud Diameter	Cable AWG/MCM				Dimensions						
		AAC	AAC Diameter	ACSR	ACSR Diameter	in (mm)						
	in (mm)		in (mm)		in (mm)	H	L	S	B1	B2	X	Y
HPR5814AC12	1-1/4 (32)	1/0T - 250*	.372 - .575 (9.4 - 14.6)	1/0 (6/1) - 4/0 (6/1)	.398 - .563 (10.1 - 14.3)	2.52 (64)	5.51 (140)	2.32 (59)	1/2 (13)	1/2 (13)	2.68 (68)	2.48 (63)
HPR5817AC12	1-1/4 (32)	250 - 400	.575 - .728 (14.6 - 18.5)	4/0 (6/1) - 397 (26/7)	.563 - .783 (14.3 - 19.9)	2.52 (64)	5.98 (152)	2.32 (59)	1/2 (13)	1/2 (13)	2.56 (65)	2.64 (67)
HPR5821AC12	1-1/4 (32)	350 - 600	.681 - .893 (17.3 - 22.7)	336 (18/1) - 477 (30/7)	.684 - .883 (17.4 - 22.4)	2.52 (64)	5.98 (152)	2.32 (59)	1/2 (13)	1/2 (13)	2.68 (68)	2.76 (70)
HPR5827AC12	1-1/4 (32)	600 - 900	.893 - 1.094 (22.7 - 27.8)	477 (30/7) - 795 (54/7)	.883 - 1.093 (22.4 - 27.8)	2.52 (64)	6.57 (167)	2.32 (59)	1/2 (13)	1/2 (13)	2.68 (68)	3.00 (76)
HPR5829AC12	1-1/4 (32)	900 - 1250	1.094 - 1.289 (27.8 - 32.7)	715 (30/19) - 1113 (54/19)	1.081 - 1.293 (27.5 - 32.8)	2.52 (64)	6.81 (173)	2.32 (59)	1/2 (13)	1/2 (13)	2.68 (68)	3.19 (81)
HPR5830AC12	1-1/4 (32)	1250 - 1600	1.289 - 1.459 (32.7 - 37.1)	1113 (54/19) - 1431 (45/7)	1.293 - 1.427 (32.8 - 36.3)	2.52 (64)	7.40 (188)	2.32 (59)	1/2 (13)	5/8 (16)	2.68 (57)	3.74 (95)
HPR58527AC0	1-3/8 (35)	600 - 900	.893 - 1.094 (22.7 - 27.8)	477 (30/7) - 795 (54/7)	.883 - 1.093 (22.4 - 27.8)	2.72 (69)	6.65 (169)	2.32 (59)	1/2 (13)	1/2 (13)	2.95 (75)	3.00 (76)
HPR58529AC0	1-3/8 (35)	900 - 1250	1.094 - 1.289 (27.8 - 32.7)	715 (30/19) - 1113 (54/19)	1.081 - 1.293 (27.5 - 32.8)	2.72 (69)	6.81 (173)	2.32 (59)	1/2 (13)	1/2 (13)	2.95 (75)	3.19 (81)
HPR5914AC12	1-1/2 (38)	1/0T - 250*	.372 - .575 (9.4 - 14.6)	1/0 (6/1) - 4/0 (6/1)	.398 - .563 (10.1 - 14.3)	2.72 (69)	5.71 (145)	2.32 (59)	1/2 (13)	1/2 (13)	2.95 (75)	2.48 (63)
HPR5917AC12	1-1/2 (38)	250 - 400	.575 - .728 (14.6 - 18.5)	4/0 (6/1) - 397 (26/7)	.563 - .783 (14.3 - 19.9)	2.72 (69)	6.10 (155)	2.32 (59)	1/2 (13)	1/2 (13)	2.95 (75)	2.64 (67)
HPR5921AC12	1-1/2 (38)	350 - 600	.681 - .893 (17.3 - 22.7)	336 (18/1) - 477 (30/7)	.684 - .883 (17.4 - 22.4)	2.72 (69)	6.38 (162)	2.32 (59)	1/2 (13)	1/2 (13)	2.95 (75)	2.76 (70)
HPR5927AC12	1-1/2 (38)	600 - 900	.893 - 1.094 (22.7 - 27.8)	477(30/7) - 795 (54/7)	.883 - 1.093 (22.4 - 27.8)	2.72 (69)	6.65 (169)	2.32 (59)	1/2 (13)	1/2 (13)	2.95 (75)	3.00 (76)
HPR5929AC12	1-1/2 (38)	900 - 1250	1.094 - 1.289 (27.8 - 32.7)	715 (30/19) - 1113 (54/19)	1.081 - 1.293 (27.5 - 32.8)	2.72 (69)	6.81 (173)	2.32 (59)	1/2 (13)	1/2 (13)	2.95 (75)	3.19 (81)
HPR5930AC12	1-1/2 (38)	1250 - 1600	1.289 - 1.459 (32.7 - 37.1)	1113 (54/19) - 1431(45/7)	1.293 - 1.427 (32.8 - 36.3)	2.72 (69)	7.40 (188)	2.32 (59)	1/2 (13)	5/8 (16)	2.95 (75)	3.74 (95)
HPR59229AC0	1-9/16 (40)	900 - 1250	1.094 - 1.289 (27.8 - 32.7)	715 (30/19) - 1113 (54/19)	1.081 - 1.293 (27.5 - 32.8)	2.72 (69)	6.81 (173)	2.32 (59)	1/2 (13)	1/2 (13)	2.95 (75)	3.19 (81)
HPR59329AC0	1-5/8 (41)	900 - 1250	1.094 - 1.289 (27.8 - 32.7)	715 (30/19) - 1113 (54/19)	1.081 - 1.293 (27.5 - 32.8)	3.19 (81)	7.60 (193)	2.52 (64)	1/2 (13)	1/2 (13)	3.39 (86)	3.19 (81)
HPR59514AC12	1-3/4 (44)	1/0T - 250*	.372 - .575 (9.4 - 14.6)	1/0 (6/1) - 4/0 (6/1)	.398 - .563 (10.1 - 14.3)	3.00 (76)	5.59 (142)	2.52 (64)	1/2 (13)	1/2 (13)	3.15 (80)	2.48 (63)
HPR59517AC12	1-3/4 (44)	250 - 400	.575 - .728 (14.6 - 18.5)	4/0 (6/1) - 397 (26/7)	.563 - .783 (14.3 - 19.9)	3.19 (81)	6.30 (160)	2.52 (64)	1/2 (13)	1/2 (13)	3.39 (86)	2.64 (67)

HPR-A CONTINUED

Aluminum Bolted Stud Connector
Stud to Cable
230kV and Below

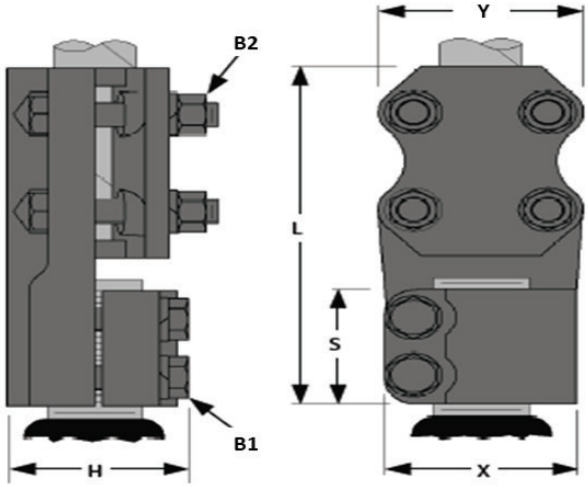

When ordering, please specify if stud is smooth or threaded with the 'C' suffix followed by the number of threads per inch.

Example of smooth stud is HPR59521AC0.

Example of stud with 12 threads per inch is HPR59521AC12.

Part Number	Stud Diameter	Cable AWG/MCM				Dimensions						
		AAC	AAC Diameter	ACSR	ACSR Diameter	in (mm)						
	in (mm)		in (mm)		in (mm)	H	L	S	B1	B2	X	Y
HPR59521AC0	1-3/4 (44)	350 - 600	.681 - .893 (17.3 - 22.7)	336 (18/1) - 477 (30/7)	.684 - .883 (17.4 - 22.4)	3.19 (81)	6.69 (170)	2.52 (64)	1/2 (13)	1/2 (13)	3.39 (86)	2.76 (70)
HPR59527AC12	1-3/4 (44)	600 - 900	.893 - 1.094 (22.7 - 27.8)	477 (30/7) - 795 (54/7)	.883 - 1.093 (22.4 - 27.8)	3.19 (81)	7.09 (180)	2.52 (64)	1/2 (13)	1/2 (13)	3.39 (86)	3.00 (76)
HPR59529AC12	1-3/4 (44)	900 - 1250	1.094 - 1.289 (27.8 - 32.7)	715 (30/19) - 1113 (54/19)	1.081 - 1.293 (27.5 - 32.8)	3.19 (81)	7.48 (190)	2.52 (64)	1/2 (13)	1/2 (13)	3.39 (86)	3.19 (81)
HPR59729AC12	1-7/8 (48)	900 - 1250	1.094 - 1.289 (27.8 - 32.7)	715 (30/19) - 1113 (54/19)	1.081 - 1.293 (27.5 - 32.8)	3.19 (81)	7.48 (190)	2.52 (64)	1/2 (13)	1/2 (13)	3.39 (86)	3.19 (81)
HPR6017AC12	2 (51)	250 - 400	.575 - .728 (14.6 - 18.5)	4/0 (6/1) - 397 (26/7)	.563 - .783 (14.3 - 19.9)	3.19 (81)	6.30 (160)	2.52 (64)	1/2 (13)	1/2 (13)	3.39 (86)	2.64 (67)
HPR6021AC12	2 (51)	350 - 600	.681 - .893 (17.3 - 22.7)	336 (18/1) - 477 (30/7)	.684 - .883 (17.3 - 22.7)	3.19 (81)	6.38 (162)	2.52 (64)	1/2 (13)	1/2 (13)	3.39 (86)	2.76 (70)
HPR6027AC12	2 (51)	600 - 900	.893 - 1.094 (22.7 - 27.8)	477 (30/7) - 795 (54/7)	.883 - 1.093 (22.4 - 27.8)	3.19 (81)	7.09 (180)	2.52 (64)	1/2 (13)	1/2 (13)	3.39 (86)	3.00 (76)
HPR6029AC12	2 (51)	900 - 1250	1.094 - 1.289 (27.8 - 32.7)	715 (30/19) - 1113 (54/19)	1.081 - 1.293 (27.5 - 32.8)	3.19 (81)	7.60 (193)	2.52 (64)	1/2 (13)	1/2 (13)	3.39 (86)	3.19 (81)
HPR6030AC12	2 (51)	1250 - 1600	1.289 - 1.459 (32.7 - 37.1)	1113 (54/19) - 1431 (45/7)	1.293 - 1.427 (32.8 - 36.3)	3.19 (81)	7.60 (193)	2.52 (64)	1/2 (13)	1/2 (13)	3.39 (86)	3.74 (95)
HPR60521AC12	2-1/4 (57)	350 - 600	.681 - .893 (17.3 - 22.7)	336 (18/1) - 477 (30/7)	.684 - .883 (17.4 - 22.4)	3.54 (90)	6.38 (162)	2.52 (64)	1/2 (13)	1/2 (13)	4.00 (102)	2.76 (70)
HPR60529AC12	2-1/4 (57)	900 - 1250	1.094 - 1.289 (27.8 - 32.7)	715 (30/19) - 1113 (54/19)	1.081 - 1.293 (27.5 - 32.8)	3.54 (90)	7.13 (181)	2.52 (64)	1/2 (13)	1/2 (13)	4.00 (102)	3.19 (81)
HPR6121AC12	2-1/2 (64)	350 - 600	.681 - .893 (17.3 - 32.7)	336 (18/1) - 477 (30/7)	.684 - .883 (17.4 - 22.4)	3.54 (90)	6.38 (162)	2.52 (64)	1/2 (13)	1/2 (13)	4.00 (102)	2.76 (70)
HPR6129AC12	2-1/2 (64)	900 - 1250	1.094 - 1.289 (27.8 - 32.7)	715 (30/19) - 1113 (54/19)	1.081 - 1.293 (27.5 - 32.8)	3.54 (90)	7.13 (181)	2.52 (64)	1/2 (13)	1/2 (13)	4.00 (102)	3.19 (81)
HPR6132AC12	2-1/2 (64)	1500- 2000	1.412 - 1.632 (35.9 - 41.5)	1272 (54/19) - 1780 (84/19)	1.382 - 1.602 (35.1 - 40.7)	3.54 (90)	7.72 (196)	2.52 (64)	1/2 (13)	5/8 (16)	4.00 (102)	3.90 (99)
HPR6227AC12	3 (76)	600 -900	.893 - 1.094 (22.7 - 27.8)	477 (30/7) - 795 (54/7)	.883 - 1.093 (22.4 - 27.8)	4.21 (107)	7.20 (183)	3.00 (76)	5/8 (16)	1/2 (13)	4.84 (123)	3.00 (76)
HPR6229AC0	3 (76)	900 - 1250	1.094 - 1.289 (27.8 - 32.7)	715 (30/19) - 1113 (54/19)	1.081 - 1.293 (27.5 - 32.8)	4.21 (107)	7.44 (189)	3.00 (76)	5/8 (16)	1/2 (13)	4.84 (123)	3.19 (81)
HPR6427AC12	4 (102)	600 - 900	.893 - 1.094 (22.7 - 27.8)	477 (30/7) - 795 (54/7)	.883 - 1.093 (22.4 - 27.8)	5.00 (127)	7.44 (189)	3.00 (76)	5/8 (16)	1/2 (13)	5.55 (141)	3.00 (76)

*S denotes SOLID wire, and T denotes STRANDED wire

HP

Bronze Bolted Stud Connector
Stud to Tube
230kV and Below

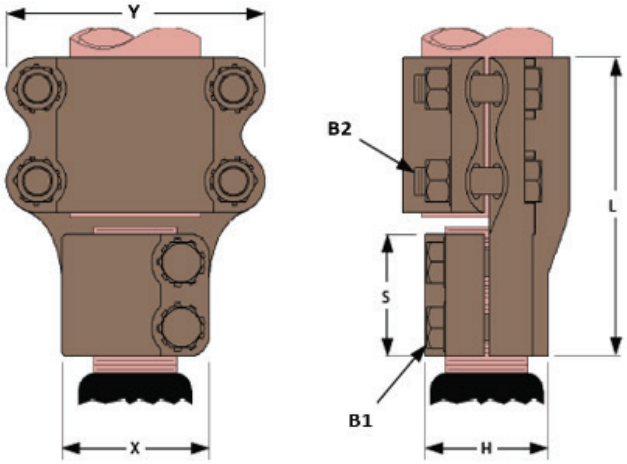

Copper alloy connector to be installed on smooth or threaded stud. Electrical joint compound is recommended for all stud/tube contact surfaces.

CASTINGS: Copper Alloy

HARDWARE: Silicon Bronze

See page 136 for special order options such as tin plating, hardware materials and specific angles. Contact PLP for further details, unlisted option and/or special applications.

When ordering, please specify if stud is smooth or threaded with the 'C' suffix followed by the number of threads per inch.

Example of smooth stud is HP5640C0.

Example of stud with 16 threads per inch is HP5640C16.

Part Number	Stud Diameter	NPS Tube Diameter	Dimensions						
	in (mm)	in (mm)	in (mm)						
			H	L	S	B1	B2	X	Y
HP5640C16	3/4 (19)	1-1/2 (38)	1.89 (48)	5.20 (132)	2.05 (52)	1/2 (13)	1/2 (13)	2.40 (61)	3.86 (98)
HP5738C12	1 (25)	1 (25)	1.89 (48)	4.09 (104)	1.61 (41)	3/8 (10)	3/8 (10)	2.24 (57)	2.87 (73)
HP5738C14	1 (25)	1 (25)	1.89 (48)	4.09 (104)	1.61 (41)	3/8 (10)	3/8 (10)	2.24 (57)	2.87 (73)
HP5740C12	1 (25)	1-1/2 (38)	1.89 (48)	5.20 (132)	2.05 (52)	1/2 (13)	1/2 (13)	2.40 (61)	3.86 (98)
HP5740C14	1 (25)	1-1/2 (38)	1.89 (48)	5.20 (132)	2.05 (52)	1/2 (13)	1/2 (13)	2.40 (61)	3.86 (98)
HP5741C12	1 (25)	2 (51)	1.89 (48)	5.31 (135)	2.05 (52)	1/2 (13)	1/2 (13)	2.40 (61)	4.72 (120)
HP5741C14	1 (25)	2 (51)	1.89 (48)	6.50 (165)	2.05 (52)	1/2 (13)	1/2 (13)	2.40 (61)	4.72 (120)
HP5742C12	1 (25)	2-1/2 (64)	1.89 (48)	5.75 (146)	2.05 (52)	1/2 (13)	1/2 (13)	2.40 (61)	5.35 (136)
HP5742C14	1 (25)	2-1/2 (64)	1.89 (48)	5.75 (146)	2.05 (52)	1/2 (13)	1/2 (13)	2.40 (61)	5.35 (136)
HP5743C12	1 (25)	3 (76)	1.89 (48)	6.22 (158)	2.05 (52)	1/2 (13)	5/8 (16)	2.40 (16)	6.14 (156)
HP57538C12	1-1/8 (29)	1 (25)	1.89 (48)	4.09 (104)	1.61 (41)	3/8 (10)	3/8 (10)	2.24 (57)	2.87 (73)
HP57540C12	1-1/8 (29)	1-1/2 (38)	1.89 (48)	5.20 (132)	2.05 (52)	1/2 (13)	1/2 (13)	2.40 (16)	3.86 (98)
HP57541C12	1-1/8 (29)	2 (51)	1.89 (48)	5.31 (135)	2.05 (52)	1/2 (13)	1/2 (13)	2.40 (16)	4.72 (120)
HP57541C14	1-1/8 (29)	2 (51)	1.89 (48)	5.31 (135)	2.05 (52)	1/2 (13)	1/2 (13)	2.40 (16)	4.72 (120)
HP57542C12	1-1/8 (29)	2-1/2 (64)	1.89 (48)	5.75 (146)	2.05 (52)	1/2 (13)	1/2 (13)	2.40 (16)	5.35 (136)
HP57542C14	1-1/8 (29)	2-1/2 (64)	1.89 (48)	5.75 (146)	2.05 (52)	1/2 (13)	1/2 (13)	2.40 (16)	5.35 (136)
HP5838C12	1-1/4 (32)	1 (25)	1.89 (48)	4.09 (104)	1.61 (41)	3/8 (10)	3/8 (10)	2.24 (57)	2.87 (73)
HP5840C12	1-1/4 (32)	1-1/2 (38)	1.89 (48)	5.20 (132)	2.05 (52)	1/2 (13)	1/2 (13)	2.40 (61)	3.86 (98)

HP CONTINUED

Bronze Bolted Stud Connector
Stud to Tube
230kV and Below

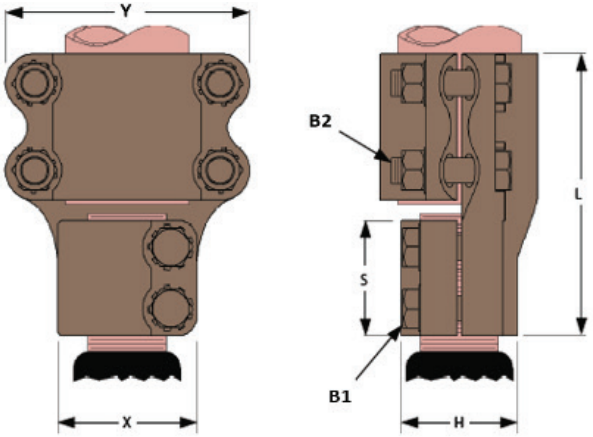

When ordering, please specify if stud is smooth or threaded with the 'C' suffix followed by the number of threads per inch.

Example of smooth stud is HP5841C0.

Example of stud with 12 threads per inch is HP5841C12.

Part Number	Stud Diameter	NPS Tube Diameter	Dimensions						
	in (mm)	in (mm)	in (mm)						
			H	L	S	B1	B2	X	Y
HP5841C12	1-1/4 (32)	2 (51)	1.89 (48)	5.31 (135)	2.05 (52)	1/2 (13)	1/2 (13)	2.40 (61)	4.72 (120)
HP5842C12	1-1/4 (32)	2-1/2 (64)	1.89 (48)	5.75 (146)	2.05 (52)	1/2 (13)	1/2 (13)	2.40 (61)	5.35 (136)
HP5937C12	1-1/2 (38)	3/4 (19)	2.20 (56)	4.61 (117)	2.05 (52)	1/2 (13)	3/8 (10)	2.68 (68)	2.87 (73)
HP5938C12	1-1/2 (38)	1 (25)	2.20 (56)	4.61 (117)	2.05 (52)	1/2 (13)	3/8 (10)	2.68 (68)	2.87 (73)
HP5939C12	1-1/2 (38)	1-1/4 (32)	2.20 (56)	5.04 (128)	2.05 (52)	1/2 (13)	1/2 (13)	2.68 (68)	3.62 (92)
HP5940C12	1-1/2 (38)	1-1/2 (38)	2.20 (56)	5.04 (128)	2.05 (52)	1/2 (13)	1/2 (13)	2.68 (68)	3.86 (98)
HP5941C12	1-1/2 (38)	2 (51)	2.20 (56)	5.12 (130)	2.05 (52)	1/2 (13)	1/2 (13)	2.68 (68)	4.72 (120)
HP5942C12	1-1/2 (38)	2-1/2 (64)	2.20 (56)	5.12 (130)	2.05 (52)	1/2 (13)	1/2 (13)	2.68 (68)	5.35 (136)
HP5943C12	1-1/2 (38)	3 (76)	2.20 (56)	6.22 (158)	2.05 (52)	1/2 (13)	5/8 (16)	2.68 (68)	6.14 (156)
HP59341C12	1-5/8 (41)	2 (51)	2.87 (73)	5.24 (133)	2.05 (52)	1/2 (13)	1/2 (13)	3.39 (86)	4.72 (120)
HP6040C12	2 (51)	1-1/2 (38)	2.87 (73)	5.24 (133)	2.05 (52)	1/2 (13)	1/2 (13)	3.39 (86)	3.86 (98)
HP6041C12	2 (51)	2 (51)	2.87 (73)	5.24 (133)	2.05 (52)	1/2 (13)	1/2 (13)	3.39 (86)	4.72 (120)
HP6042C12	2 (51)	2-1/2 (64)	2.87 (73)	5.24 (133)	2.05 (52)	1/2 (13)	1/2 (13)	3.39 (86)	5.35 (136)
HP6043C12	2 (51)	3 (76)	2.87 (73)	5.24 (133)	2.05 (52)	1/2 (13)	1/2 (13)	3.39 (86)	6.14 (156)
HP6044C12	2 (51)	3-1/2 (89)	2.87 (73)	5.24 (133)	2.05 (52)	1/2 (13)	1/2 (13)	3.39 (86)	6.89 (175)
HP60241C12	2-1/8 (54)	2 (51)	3.54 (90)	5.59 (142)	2.52 (64)	1/2 (13)	1/2 (13)	3.86 (98)	4.72 (120)
HP60538C12	2-1/4 (57)	1 (25)	3.54 (90)	5.16 (131)	2.52 (64)	1/2 (13)	3/8 (10)	3.86 (98)	2.87 (73)
HP6241C12	3 (76)	2 (51)	4.13 (105)	6.10 (155)	2.91 (74)	5/8 (16)	1/2 (13)	4.69 (119)	4.72 (120)
HP6243C12	3 (76)	3 (76)	4.13 (105)	6.73 (171)	2.91 (74)	5/8 (16)	5/8 (16)	4.69 (119)	6.14 (156)
HP6244C12	3 (76)	3-1/2 (89)	4.13 (105)	6.46 (164)	2.91 (74)	5/8 (16)	5/8 (16)	4.69 (119)	6.89 (175)
HP6449C12	4 (102)	6 (152)	5.12 (130)	8.74 (222)	3.00 (76)	5/8 (16)	5/8 (16)	5.63 (143)	9.69 (246)

HPR

Bronze Bolted Stud Connector
Stud to Cable
230kV and Below

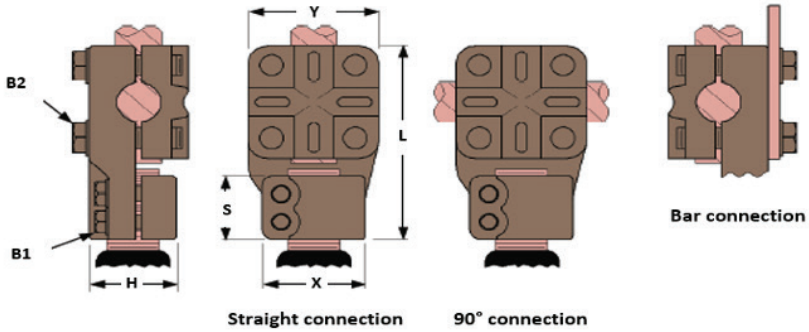

Copper alloy connector to be installed on smooth or threaded stud. Cable can be straight or 90-degrees to stud. Electrical joint compound is recommended for all stud/cable contact surfaces.

CASTINGS: Copper Alloy

HARDWARE: Silicon Bronze

See page 136 for special order options such as tin plating, hardware materials and specific angles. Contact PLP for further details, unlisted option and/or special applications.

When ordering, please specify if stud is smooth or threaded with the 'C' suffix followed by the number of threads per inch.

Example of smooth stud is HPR5513C0.

Example of stud with 13 threads per inch is HPR5513C13.

Part Number	Stud Diameter	Cable		Dimensions						
		AWG/MCM	Diameter	in (mm)						
	in (mm)		in (mm)	H	L	S	B1	B2	X	Y
HPR5513C13	1/2 (13)	6S - 4T*	.162 - .232 (4.1 - 5.9)	1.18 (30)	3.82 (97)	1.54 (39)	3/8 (10)	3/8 (10)	1.61 (41)	2.17 (55)
HPR5519C13	1/2 (13)	6S - 500*	.162 - .814 (4.1 - 20.7)	1.18 (30)	4.13 (105)	1.54 (39)	3/8 (10)	3/8 (10)	1.61 (41)	2.83 (72)
HPR5528C12	1/2 (13)	2S - 1000*	.258 - 1.152 (6.6 - 29.3)	1.89 (48)	4.80 (122)	1.61 (41)	3/8 (10)	1/2 (13)	2.24 (57)	2.17 (55)
HPR55519C13	5/8 (16)	6S - 500*	.162 - .814 (4.1 - 20.7)	1.30 (33)	4.13 (105)	1.54 (39)	3/8 (10)	3/8 (10)	1.61 (41)	2.83 (72)
HPR5619C12	3/4 (19)	6S - 500*	.162 - .814 (4.1 - 20.7)	1.30 (33)	4.13 (105)	1.54 (39)	3/8 (10)	3/8 (10)	1.61 (41)	2.83 (72)
HPR5619C16	3/4 (19)	6S - 500*	.162 - .814 (4.1 - 20.7)	1.30 (33)	4.13 (105)	1.54 (39)	3/8 (10)	3/8 (10)	1.61 (41)	2.17 (55)
HPR5628C12	3/4 (19)	2S - 1000*	.258 - 1.152 (6.6 - 29.3)	1.89 (48)	4.80 (122)	1.61 (41)	3/8 (10)	1/2 (13)	2.24 (57)	2.17 (55)
HPR5628C16	3/4 (19)	2S - 1000*	.258 - 1.152 (6.6 - 29.3)	1.89 (48)	4.80 (122)	1.61 (41)	3/8 (10)	1/2 (13)	1.61 (41)	2.83 (72)
HPR56519C14	7/8 (23)	6S - 500*	.162 - .814 (4.1 - 20.7)	1.89 (48)	4.13 (105)	1.61 (41)	3/8 (10)	3/8 (10)	2.24 (57)	1.89 (48)
HPR5713C14	1 (25)	6S - 4T*	.162 - .232 (4.1 - 5.9)	1.89 (48)	3.70 (94)	1.61 (41)	3/8 (10)	3/8 (10)	2.24 (57)	1.89 (48)
HPR5719C14	1 (25)	6S - 500*	.162 - .814 (4.1 - 20.7)	1.89 (48)	4.13 (105)	1.61 (41)	3/8 (10)	3/8 (10)	2.24 (57)	2.17 (55)
HPR5728C14	1 (25)	2S - 1000*	.258 - 1.152 (6.6 - 29.3)	1.89 (48)	4.80 (122)	1.61 (41)	3/8 (10)	1/2 (13)	2.24 (57)	2.83 (72)
HPR5732C14	1 (25)	4/0T - 2000*	.528 - 1.632 (13.4 - 41.5)	1.89 (48)	5.55 (141)	1.61 (41)	3/8 (10)	1/2 (13)	2.24 (57)	3.39 (86)
HPR57328C12	1-1/16 (27)	2S - 1000*	.258 - 1.152 (6.6 - 29.3)	1.89 (48)	4.80 (122)	1.61 (41)	3/8 (10)	1/2 (13)	2.24 (57)	1.89 (48)
HPR57513C12	1-1/8 (29)	6S - 4T*	.162 - .232 (4.1 - 5.9)	1.89 (48)	3.70 (94)	1.61 (41)	3/8 (10)	3/8 (10)	2.24 (57)	1.89 (48)
HPR57519C12	1-1/8 (29)	6S - 500*	.162 - .814 (4.1 - 20.7)	1.89 (48)	4.13 (105)	1.61 (41)	3/8 (10)	3/8 (10)	2.24 (57)	2.17 (55)

*S denotes SOLID wire, and T denotes STRANDED wire

HPR CONTINUED

Bronze Bolted Stud Connector
Stud to Cable
230kV and Below

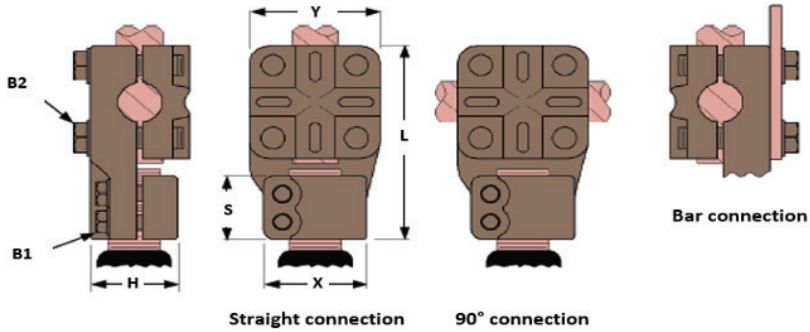

When ordering, please specify if stud is smooth or threaded with the 'C' suffix followed by the number of threads per inch.

Example of smooth stud is HPR57528C0.

Example of stud with 12 threads per inch is HPR57528C12.

Part Number	Stud Diameter	Cable		Dimensions						
		AWG/MCM	Diameter	in (mm)						
	in (mm)		in (mm)	H	L	S	B1	B2	X	Y
HPR57528C12	1-1/8 (29)	2S - 1000*	.258 - 1.152 (6.6 - 29.3)	1.89 (48)	4.80 (122)	1.61 (41)	3/8 (10)	1/2 (13)	2.24 (57)	2.83 (72)
HPR57532C12	1-1/8 (29)	4/0T - 2000*	.528 - 1.632 (13.4 - 41.5)	1.89 (48)	5.55 (141)	1.61 (41)	3/8 (10)	1/2 (13)	2.24 (57)	3.39 (86)
HPR57813C0	1-3/16 (30)	6S - 4T*	.162 - .232 (4.1 - 5.9)	1.89 (48)	3.70 (94)	1.61 (41)	3/8 (10)	3/8 (10)	2.24 (57)	1.89 (48)
HPR57819C12	1-3/16 (30)	6S - 500*	.162 - .814 (4.1 - 20.7)	1.89 (48)	4.13 (105)	1.61 (41)	3/8 (10)	3/8 (10)	2.24 (57)	2.17 (55)
HPR57828C12	1-3/16 (30)	2S - 1000*	.258 - 1.152 (6.6 - 29.3)	1.89 (48)	4.80 (122)	1.61 (41)	3/8 (10)	1/2 (13)	2.24 (57)	2.83 (72)
HPR5813C12	1-1/4 (32)	6S - 4T*	.162 - .232 (4.1 - 5.9)	1.89 (48)	3.70 (94)	1.61 (41)	3/8 (10)	3/8 (10)	2.24 (57)	1.89 (48)
HPR5819C12	1-1/4 (32)	6S - 500*	.162 - .814 (4.1 - 20.7)	1.89 (48)	4.13 (105)	1.61 (41)	3/8 (10)	3/8 (10)	2.24 (57)	2.17 (55)
HPR5828C12	1-1/4 (32)	2S - 1000*	.258 - 1.152 (6.6 - 29.3)	1.89 (48)	4.80 (122)	1.61 (41)	3/8 (10)	1/2 (13)	2.24 (57)	2.83 (72)
HPR5832C12	1-1/4 (32)	4/0T - 2000*	.528 - 1.632 (13.4 - 41.5)	1.89 (48)	5.55 (141)	1.61 (41)	3/8 (10)	1/2 (13)	2.24 (57)	3.39 (86)
HPR58519C12	1-3/8 (35)	6S - 500*	.162 - .814 (4.1 - 20.7)	2.20 (56)	4.80 (122)	2.13 (54)	1/2 (13)	3/8 (10)	2.76 (70)	2.17 (55)
HPR58528C12	1-3/8 (35)	2S - 1000*	.258 - 1.152 (6.6 - 29.3)	2.20 (56)	5.47 (139)	2.13 (54)	1/2 (13)	1/2 (13)	2.76 (70)	2.83 (72)
HPR58532C12	1-3/8 (35)	4/0T - 2000*	.528 - 1.632 (13.4 - 41.5)	2.20 (56)	5.83 (148)	2.13 (54)	1/2 (13)	1/2 (13)	2.76 (70)	3.39 (86)
HPR5913C12	1-1/2 (38)	6S - 4T*	.162 - .232 (4.1 - 5.9)	2.20 (56)	4.41 (112)	2.13 (54)	1/2 (13)	3/8 (10)	2.76 (70)	1.89 (48)
HPR5919C12	1-1/2 (38)	6S - 500*	.162 - .814 (4.1 - 20.7)	2.20 (56)	4.80 (122)	2.13 (54)	1/2 (13)	3/8 (10)	2.76 (70)	2.17 (55)
HPR5928C12	1-1/2 (38)	2S - 1000*	.258 - 1.152 (6.6 - 29.3)	2.20 (56)	5.47 (139)	2.13 (54)	1/2 (13)	1/2 (13)	2.76 (70)	2.83 (72)
HPR5932C12	1-1/2 (38)	4/0T - 2000*	.528 - 1.632 (13.4 - 41.5)	2.20 (56)	5.83 (148)	2.13 (54)	1/2 (13)	1/2 (13)	2.76 (70)	3.39 (86)
HPR59319C12	1-5/8 (41)	6S - 500*	.162 - .814 (4.1 - 20.7)	2.56 (65)	5.04 (128)	2.13 (54)	1/2 (13)	3/8 (10)	3.00 (76)	2.17 (55)

*S denotes SOLID wire, and T denotes STRANDED wire

HPR CONTINUED

Bronze Bolted Stud Connector
Stud to Cable
230kV and Below

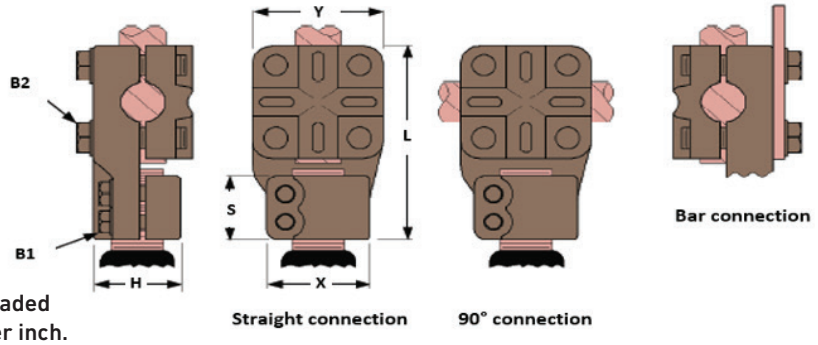

When ordering, please specify if stud is smooth or threaded with the 'C' suffix followed by the number of threads per inch.

Example of smooth stud is HPR59328C0.

Example of stud with 12 threads per inch is HPR59328C12.

Part Number	Stud Diameter	Cable		Dimensions						
		AWG/MCM	Diameter	in (mm)						
	in (mm)		in (mm)	H	L	S	B1	B2	X	Y
HPR59328C12	1-5/8 (41)	.258 - 1.152 (6.6 - 29.3)	2S - 1000*	2.56 (65)	5.39 (137)	2.13 (54)	1/2 (13)	1/2 (13)	3.00 (76)	2.83 (72)
HPR59332C12	1-5/8 (41)	.528 - 1.632 (13.4 - 41.5)	4/0T - 2000*	2.87 (73)	6.18 (157)	2.13 (54)	1/2 (13)	1/2 (13)	3.39 (86)	3.39 (86)
HPR59519C12	1-3/4 (45)	.162 - .814 (4.1 - 20.7)	6S - 500*	2.56 (65)	5.04 (128)	2.13 (54)	1/2 (13)	3/8 (10)	3.00 (76)	2.17 (55)
HPR59528C12	1-3/4 (45)	.258 - 1.152 (6.6 - 29.3)	2S - 1000*	2.56 (65)	5.39 (137)	2.13 (54)	1/2 (13)	1/2 (13)	3.00 (76)	2.83 (72)
HPR59532C12	1-3/4 (45)	.528 - 1.632 (13.4 - 41.5)	4/0T - 2000*	2.87 (73)	6.18 (157)	2.13 (54)	1/2 (13)	1/2 (13)	3.39 (86)	3.39 (86)
HPR6013C12	2 (51)	.162 - .232 (4.1 - 5.9)	6S - 4T*	2.87 (73)	5.00 (127)	2.13 (54)	1/2 (13)	3/8 (10)	3.39 (86)	1.89 (48)
HPR6019C12	2 (51)	.162 - .814 (4.1 - 20.7)	6S - 500*	2.87 (73)	5.16 (131)	2.13 (54)	1/2 (13)	3/8 (10)	3.39 (86)	2.17 (55)
HPR6028C12	2 (51)	.258 - 1.152 (6.6 - 29.3)	2S - 1000*	2.87 (73)	5.51 (140)	2.13 (54)	1/2 (13)	1/2 (13)	3.39 (86)	2.83 (72)
HPR6032C12	2 (51)	.528 - 1.632 (13.4 - 41.5)	4/0T - 2000*	2.87 (73)	6.18 (157)	2.13 (54)	1/2 (13)	1/2 (13)	3.39 (86)	3.39 (86)
HPR60519C12	2-1/4 (57)	.162 - .814 (4.1 - 20.7)	6S - 500*	3.54 (90)	5.39 (137)	2.52 (64)	1/2 (13)	3/8 (10)	3.86 (98)	2.17 (55)
HPR60532C12	2-1/4 (57)	.528 - 1.632 (13.4 - 41.5)	4/0T - 2000*	3.54 (90)	6.42 (163)	2.52 (64)	1/2 (13)	1/2 (13)	3.86 (98)	3.39 (86)
HPR6119C12	2-1/2 (64)	.162 - .814 (4.1 - 20.7)	6S - 500*	3.54 (90)	5.39 (137)	2.52 (64)	1/2 (13)	3/8 (10)	3.86 (98)	2.17 (55)
HPR6128C12	2-1/2 (64)	.258 - 1.152 (6.6 - 29.3)	2S - 1000*	3.54 (90)	5.83 (148)	2.52 (64)	1/2 (13)	1/2 (13)	3.86 (98)	2.83 (72)
HPR6132C12	2-1/2 (64)	.528 - 1.632 (13.4 - 41.5)	4/0T - 2000*	3.54 (90)	6.42 (163)	2.52 (64)	1/2 (13)	1/2 (13)	3.86 (98)	3.39 (86)
HPR6213C12	3 (76)	.162 - .232 (4.1 - 5.9)	6S - 4T*	4.02 (102)	5.59 (142)	2.95 (75)	5/8 (16)	3/8 (10)	4.80 (122)	1.89 (48)
HPR6219C12	3 (76)	.162 - .814 (4.1 - 20.7)	6S - 500*	4.02 (102)	5.59 (142)	2.95 (75)	5/8 (16)	3/8 (10)	4.80 (122)	2.17 (55)
HPR6228C12	3 (76)	.258 - 1.152 (6.6 - 29.3)	2S - 1000*	4.02 (102)	6.50 (165)	2.95 (75)	5/8 (16)	1/2 (13)	4.80 (122)	2.83 (72)
HPR6428C12	4 (102)	.258 - 1.152 (6.6 - 29.3)	2S - 1000*	5.24 (133)	7.01 (178)	3.07 (78)	5/8 (16)	1/2 (13)	5.63 (143)	2.83 (72)

*S denotes SOLID wire, and T denotes STRANDED wire

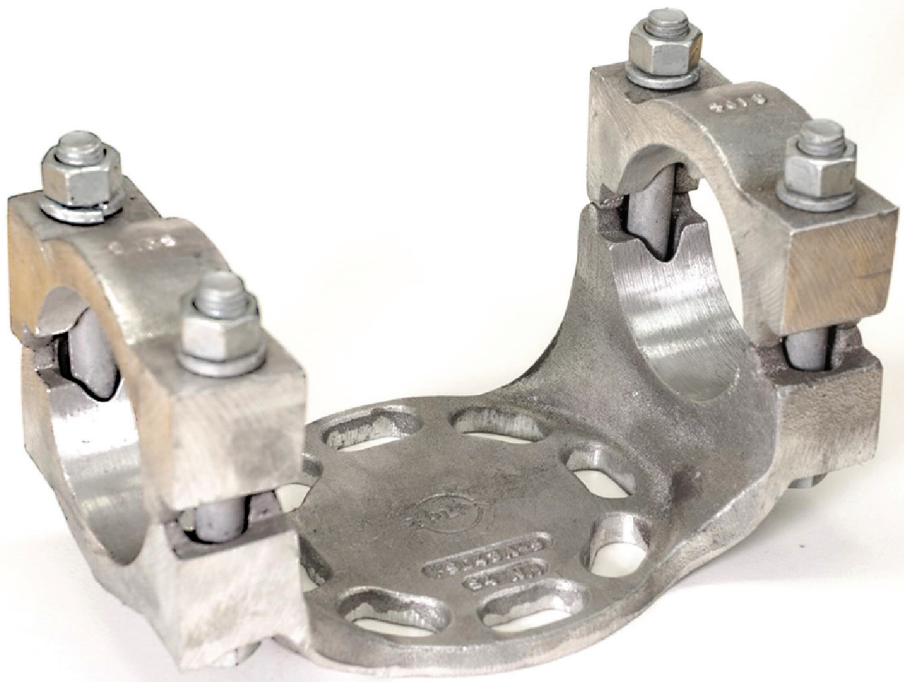

SECTION 6

BUS SUPPORTS

SUBSTATION CONNECTORS - 230KV AND BELOW

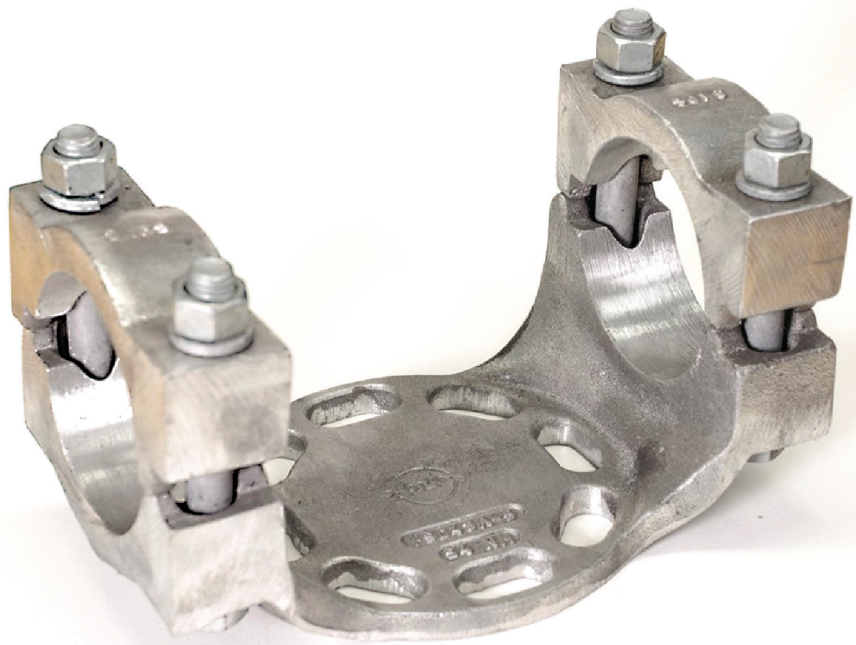

BUS SUPPORTS

PLP **Substation Connectors Bus Supports** for 230kV and below are designed to support bus tube or stranded conductor on a post insulator or other primary equipment. These are mechanical supports, not current carrying. All contact faces are manufactured to maximize contact surface area and provide a superior installed fit.

FEATURES AND BENEFITS

- Complete range of sizes for connecting most standard bus tube or stranded conductor
- Solutions for bolted, compression, and weldment applications
- Designed to standard 3", 5", and 7" bolt patterns
- Available in aluminum and bronze, with tin plating capabilities for both materials
- Custom design solutions available to secure your most challenging connections

FSD-A

Aluminum Bolted Bus Support Tube to Insulator, Double Support 230kV and Below

Fixed position

Sliding position

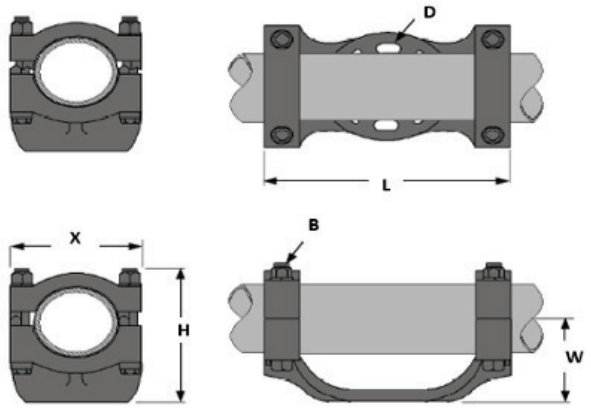

Aluminum alloy double support for bus tube. 180° rotation of the caps allow for fixed or sliding position. Electrical joint compound is recommended for all tube contact surfaces.

CASTINGS: Aluminum Alloy

HARDWARE: Galvanized Steel

See page 136 for special order options such as tin plating, hardwar materials and specific angles. Contact PLP for further details, unlisted option and/or special applications.

Example: FSD37A-3 with Stainless Steel Hardware would be FSD37A-3-SS.

Part Number	NPS Tube Diameter	Bolt Circle	Dimensions in (mm)					
	in (mm)	in (mm)	D	H	L	B	W	X
FSD37A-3	3/4 (19)	3 (76)	.55 (14)	3.43 (87)	8.31 (211)	1/2 (13)	2.01 (51)	2.80 (71)
FSD37A-5	3/4 (19)	5 (127)	.67 (17)	3.43 (87)	10.51 (267)	1/2 (13)	2.01 (51)	2.80 (71)
FSD38A-3	1 (25)	3 (76)	.55 (14)	4.09 (104)	8.31 (211)	1/2 (13)	2.17 (55)	3.07 (78)
FSD38A-5	1 (25)	5 (127)	.67 (17)	3.86 (98)	10.51 (267)	1/2 (13)	2.17 (55)	3.07 (78)
FSD39A-3	1-1/4 (32)	3 (76)	.55 (14)	3.86 (98)	8.31 (211)	1/2 (13)	2.20 (56)	3.31 (84)
FSD39A-5	1-1/4 (32)	5 (127)	.67 (17)	3.86 (98)	10.51 (267)	1/2 (13)	2.20 (56)	3.31 (84)
FSD40A-3	1-1/2 (38)	3 (76)	.55 (14)	4.61 (117)	8.31 (211)	1/2 (13)	2.56 (65)	3.74 (95)
FSD40A-5	1-1/2 (38)	5 (127)	.67 (17)	4.61 (117)	10.51 (267)	1/2 (13)	2.56 (65)	3.74 (95)
FSD41A-3	2 (51)	3 (76)	.55 (14)	5.63 (143)	8.46 (215)	5/8 (16)	2.76 (70)	4.57 (116)
FSD41A-5	2 (51)	5 (127)	.67 (17)	5.63 (143)	10.51 (267)	5/8 (16)	2.76 (70)	4.57 (116)
FSD42A-3	2-1/2 (64)	3 (76)	.55 (14)	5.63 (143)	8.46 (215)	5/8 (16)	3.31 (84)	5.08 (129)
FSD42A-5	2-1/2 (64)	5 (127)	.67 (17)	5.63 (143)	10.51 (267)	5/8 (16)	2.87 (73)	5.35 (136)
FSD43A-3	3 (76)	3 (76)	.55 (14)	6.61 (168)	8.31 (211)	5/8 (16)	3.50 (89)	5.71 (145)
FSD43A-5	3 (76)	5 (127)	.67 (17)	6.61 (168)	10.51 (267)	5/8 (16)	3.50 (89)	5.71 (145)
FSD44A-3	3-1/2 (89)	3 (76)	.55 (14)	6.93 (176)	8.46 (211)	5/8 (16)	4.00 (102)	6.14 (156)
FSD44A-5	3-1/2 (89)	5 (127)	.67 (17)	6.93 (176)	10.51 (267)	5/8 (16)	4.00 (102)	6.14 (156)

FSD-A CONTINUED

Aluminum Bolted Bus Support Tube to Insulator, Double Support 230kV and Below

Fixed position

Sliding position

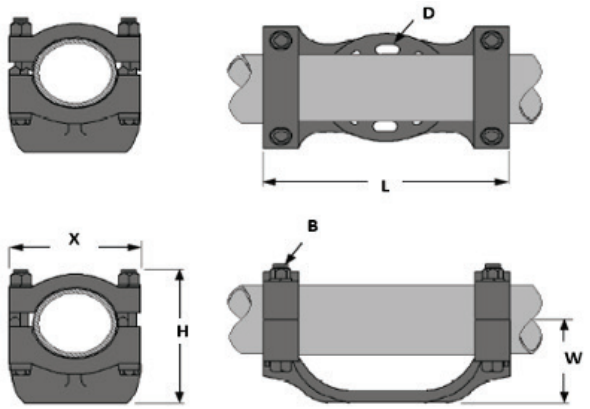

Part Number	NPS Tube Diameter	Bolt Circle	Dimensions in (mm)					
	in (mm)	in (mm)	D	H	L	B	W	X
FSD45A-3	4 (102)	3 (76)	.55 (14)	7.48 (190)	8.46 (215)	5/8 (16)	4.57 (116)	7.01 (178)
FSD45A-5	4 (102)	5 (127)	.67 (17)	7.72 (196)	10.51 (267)	5/8 (16)	4.57 (116)	7.01 (178)
FSD46A-3	4-1/2 (114)	3 (76)	.55 (14)	8.43 (214)	8.46 (215)	5/8 (16)	4.76 (121)	7.13 (181)
FSD47A-3	5 (127)	3 (76)	.55 (14)	8.86 (225)	10.51 (267)	5/8 (16)	5.24 (133)	8.00 (203)
FSD47A-5	5 (127)	5 (127)	.67 (17)	8.86 (225)	10.51 (267)	5/8 (16)	5.24 (133)	8.00 (203)
FSD49A-3	6 (152)	3 (76)	.55 (14)	10.00 (254)	10.51 (267)	5/8 (16)	5.75 (146)	8.78 (223)
FSD49A-5	6 (152)	5 (127)	.67 (17)	10.00 (254)	10.51 (267)	5/8 (16)	5.75 (146)	8.78 (223)

SHG

Aluminum Bolted Bus Support Cable to Insulator 230kV and Below

Aluminum alloy bus support for one cable mounted on an insulator bolt circle. Electrical joint compound is recommended for all cable contact surfaces.

CASTINGS: Aluminum Alloy

HARDWARE: Galvanized Steel

See page 136 for special order options such as tin plating, hardware materials and specific angles. Contact PLP for further details, unlisted option and/or special applications.

Example: SHG21A-3 with Stainless Steel Hardware would be SHG21A-3-SS.

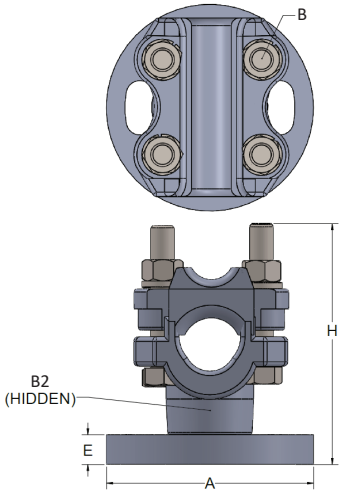

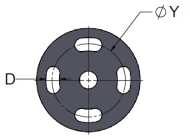

FIGURE 1

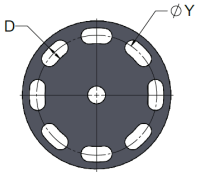

FIGURE 2

Part Number	Figure	Cable AWG/MCM				Dimensions						
		AAC	AAC Diameter	ACSR	ACSR Diameter	in (mm)						
			in (mm)		in (mm)	A	D	E	H	B	B2	Y
SHG21A-3	1	1/0S - 600*	0.372 - 0.893 (9.4 - 22.7)	1/0 (6/1) - 477 (30/7)	0.398 - 0.883 (10.1 - 22.4)	4.37 (111)	0.56 (14)	0.51 (13)	4.33 (110)	1/2 (13)	5/8 (16)	3.00 (76)
SHG21A-5	2	1/0S - 600*	0.372 - 0.893 (9.4 - 22.7)	1/0 (6/1) - 477 (30/7)	0.398 - 0.883 (10.1 - 22.4)	6.42 (163)	0.68 (17)	0.51 (13)	4.33 (110)	1/2 (13)	5/8 (16)	5.00 (127)
SHG29A-3	1	600 - 1250	0.893 - 1.289 (22.7 - 32.7)	477 (30/7) - 1113 (54/19)	0.883 - 1.293 (22.4 - 32.8)	4.37 (111)	0.56 (14)	0.51 (13)	5.12 (130)	1/2 (13)	5/8 (16)	3.00 (76)
SHG29A-5	2	600 - 1250	0.893 - 1.289 (22.7 - 32.7)	477 (30/7) - 1113 (54/19)	0.883 - 1.293 (22.4 - 32.8)	6.42 (163)	0.68 (17)	0.51 (13)	5.12 (130)	1/2 (13)	5/8 (16)	5.00 (127)
SHG32A-3	1	1250 - 2000	1.289 - 1.632 (32.7 - 41.5)	1113 (54/19) - 1780 (84/19)	1.293 - 1.602 (32.8 - 40.7)	4.37 (111)	0.56 (14)	0.51 (13)	5.43 (138)	5/8 (16)	3/4 (19)	3.00 (76)
SHG32A-5	2	1250 - 2000	1.289 - 1.632 (32.7 - 41.5)	1113 (54/19) - 1780 (84/19)	1.293 - 1.602 (32.8 - 40.7)	6.42 (163)	0.68 (17)	0.51 (13)	5.43 (138)	5/8 (16)	3/4 (19)	5.00 (127)

*S denotes solid wire, and T denotes standard wire.

SF

Bronze Bolted Bus Support Tube to Insulator 230kV and Below

Copper alloy bus support for tube. Slotted bolt circle allows for mounting to match desired angle.

CASTINGS: Copper Alloy

HARDWARE: Silicon Bronze

See page 136 for special order options such as tin plating, hardware materials and specific angles. Contact PLP for further details, unlisted option and/or special applications.

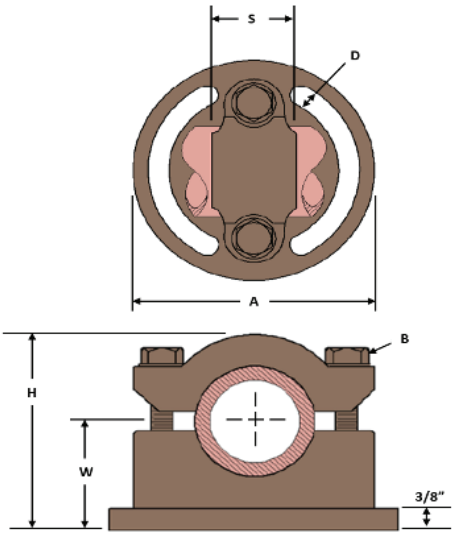

Part Number	NPS Tube Diameter	Bolt Circle	Dimensions in (mm)					
	in (mm)	in (mm)	A	D	H	S	B	W
SF37-3	3/4 (19)	3 (76)	4.25 (108)	.56 (14)	2.95 (75)	1.26 (32)	3/8 (10)	1.89 (48)
SP37-5	3/4 (19)	5 (127)	6.46 (164)	.67 (17)	2.95 (75)	1.26 (32)	3/8 (10)	1.89 (48)
SF38-3	1 (25)	3 (76)	4.25 (108)	.56 (14)	2.95 (75)	1.26 (32)	3/8 (10)	1.89 (48)
SF38-5	1 (25)	5 (127)	6.46 (164)	.67 (17)	2.95 (75)	1.26 (32)	3/8 (10)	1.89 (48)
SF39-3	1-1/4 (32)	3 (76)	4.25 (108)	.56 (14)	2.95 (75)	1.61 (41)	1/2 (13)	1.89 (48)
SF39-5	1-1/4 (32)	5 (127)	6.46 (164)	.67 (17)	3.23 (82)	1.77 (45)	1/2 (13)	1.89 (48)
SF40-3	1-1/2 (38)	3 (76)	4.25 (108)	.56 (14)	3.31 (84)	1.61 (41)	1/2 (13)	1.97 (50)
SF40-5	1-1/2 (38)	5 (127)	6.46 (164)	.67 (17)	3.31 (84)	1.61 (41)	1/2 (13)	1.97 (50)
SF41-3	2 (51)	3 (76)	4.76 (121)	.56 (14)	4.00 (102)	1.61 (41)	1/2 (13)	2.44 (62)
SF41-5	2 (51)	5 (127)	6.46 (164)	.67 (17)	4.00 (102)	1.61 (41)	1/2 (13)	2.44 (62)
SF42-3	2-1/2 (64)	3 (76)	4.76 (121)	.56 (14)	4.49 (114)	1.69 (43)	1/2 (13)	2.64 (67)
SF42-5	2-1/2 (64)	5 (127)	6.46 (164)	.67 (17)	4.49 (114)	1.69 (43)	1/2 (13)	2.64 (67)
SF43-3	3 (76)	3 (76)	4.76 (121)	.56 (14)	4.92 (125)	1.89 (48)	5/8 (16)	2.76 (70)
SF43-5	3 (76)	5 (127)	4.76 (121)	.67 (17)	4.92 (125)	1.89 (48)	5/8 (16)	2.76 (70)

SD

Bronze Slide Fit Bus Support Tube to Insulator 230kV and Below

Copper alloy bus support for tube. Slotted bolt circle allows for mounting to match desired angle.

CASTINGS: Copper Alloy

See page 136 for special order options such as tin plating, hardware materials and specific angles. Contact PLP for further details, unlisted option and/or special applications.

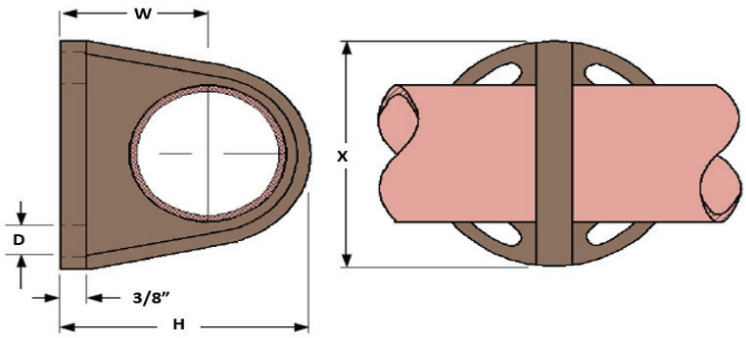

Part Number	NPS Tube Diameter	Bolt Circle	Dimensions in (mm)			
	in (mm)	in (mm)	D	H	W	X
SD36-3	1/2 (13)	3 (76)	.56 (14)	2.76 (70)	4.25 (108)	1.77 (45)
SD36-5	1/2 (13)	5 (127)	.67 (17)	3.50 (89)	6.26 (159)	2.52 (64)
SD37-3	3/4 (19)	3 (76)	.56 (14)	3.19 (81)	2.01 (51)	4.25 (108)
SD37-5	3/4 (19)	5 (127)	.67 (17)	3.94 (100)	2.76 (70)	6.26 (159)
SD38-3	1 (25)	3 (76)	.56 (14)	3.39 (86)	2.05 (52)	4.25 (108)
SD38-5	1 (25)	5 (127)	.67 (17)	4.13 (105)	2.76 (70)	6.26 (159)
SD39-3	1-1/4 (32)	3 (76)	.56 (14)	3.78 (96)	2.24 (57)	4.25 (108)
SD39-5	1-1/4 (32)	5 (127)	.67 (17)	4.37 (111)	3.00 (76)	6.26 (159)
SD40-3	1-1/2 (38)	3 (76)	.56 (14)	4.17 (106)	2.52 (64)	4.25 (108)
SD40-5	1-1/2 (38)	5 (127)	.67 (17)	4.80 (122)	3.27 (83)	6.26 (159)
SD41-3	2 (51)	3 (76)	.56 (14)	4.37 (111)	2.48 (63)	4.25 (108)
SD41-5	2 (51)	5 (127)	.67 (17)	5.12 (130)	3.27 (83)	6.26 (159)
SD42-3	2-1/2 (64)	3 (76)	.56 (14)	5.24 (133)	3.00 (76)	4.25 (108)
SD42-5	2-1/2 (64)	5 (127)	.67 (17)	5.98 (152)	3.74 (95)	6.26 (159)
SD43-3	3 (76)	3 (76)	.56 (14)	5.67 (144)	3.00 (76)	4.25 (108)

SD CONTINUED

Bronze Slide Fit Bus Support Tube to Insulator 230kV and Below

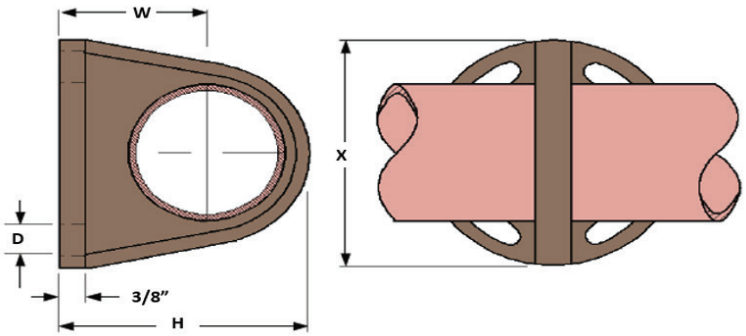

Part Number	NPS Tube Diameter	Bolt Circle	Dimensions in (mm)			
	in (mm)	in (mm)	D	H	W	X
SD43-5	3 (76)	5 (127)	.67 (17)	6.42 (163)	3.74 (95)	6.26 (159)
SD44-3	3-1/2 (89)	3 (76)	.56 (14)	7.32 (186)	4.25 (108)	4.25 (108)
SD44-5	3-1/2 (89)	5 (127)	.67 (17)	7.56 (192)	6.26 (159)	4.49 (114)
SD45-3	4 (102)	3 (76)	.56 (14)	7.68 (195)	4.25 (108)	4.25 (108)
SD45-5	4 (102)	5 (127)	.67 (17)	7.95 (202)	6.26 (159)	4.49 (114)
SD46-5	4-1/2 (114)	5 (127)	.67 (17)	8.46 (215)	6.26 (159)	4.76 (121)

SECTION 7

SPACERS

SUBSTATION CONNECTORS - 230KV AND BELOW

SPACERS

PLP **Substation Connectors Spacers** for 230kV and below are designed to properly space stranded conductor in different bundle arrangements. For slack conductor connections, PLP recommends at least one spacer is placed between every piece of substation equipment (e.g., between circuit breaker and current transformer) and/or one spacer is placed every 10 feet (3 meters). For tensioned connections inside substation (strung bus), PLP recommends one spacer is placed every 33 feet (10 meters). Rigid spacers should not be used at OHL connections subjected to vibrations. A wide range of flexible spacers and spacer dampers for this purpose is available.

FEATURES AND BENEFITS

- Complete range of sizes for connecting most standard stranded conductor and standard spacing
- Solutions for bolted applications
- Available in aluminum and bronze, with tin plating capabilities for both materials
- Custom design solutions available to secure your most challenging connections

ES-A

Aluminum Bolted Spacer
Two Cables
230kV and Below

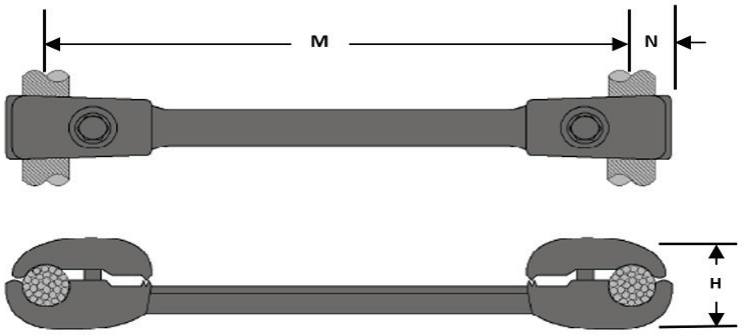

Aluminum alloy spacer to connect two cables at a specific distance. Electrical joint compound is recommended for all cable contact surfaces.

CASTINGS: Aluminum Alloy

HARDWARE: Galvanized Steel

See page 136 for special order options such as tin plating, hardware materials and specific angles. Contact PLP for further details, unlisted option and/or special applications.

Use the table to the right to specify the spacer distance.

Example: ES21A with 200 mm spacing and stainless steel hardware is ES21A-200-SS.

Contact PLP for unlisted options or special applications.

Cable Distance Designation - (M)

Suffix	Distance in (mm)
100	3.94 (100)
200	7.87 (200)
300	11.81 (300)
330	13.00 (330)
400	15.75 (400)
450	17.72 (450)

Part Number	AWG/MCM	AWG/MCM Diameter in (mm)	ACSR	ACSR Diameter in (mm)	Dimensions in (mm) H	Dimensions in (mm) N
ES21A-(M)	500 - 600	.814 - .893 (20.7 - 22.7)	477 (18/1) - 477 (30/7)	.814 - .883 (20.7 - 22.4)	2.95 (75)	1.02 (26)
ES24A-(M)	636 - 750	.918 - .998 (23.3 - 25.3)	556 (18/1) - 666 (24/7)	.879 - 1.000 (22.3 - 25.4)	2.95 (75)	1.02 (26)
ES26A-(M)	795 - 874	1.028 - 1.078 (26.1 - 27.4)	715 (54/7) - 795 (54/7)	1.036 - 1.093 (26.3 - 27.8)	2.95 (75)	1.02 (26)
ES28A-(M)	900 - 1000	1.094 - 1.152 (27.8 - 29.3)	795 (54/7) - 954 (45/7)	1.093 - 1.165 (27.8 - 29.6)	2.95 (75)	1.02 (26)
ES285A-(M)	1033 - 1113	1.171 - 1.216 (29.7 - 30.9)	900 (54/7) - 1033 (54/7)	1.162 - 1.246 (29.5 - 31.7)	2.95 (75)	1.02 (26)
ES287A-(M)	1033 - 1192	1.171 - 1.259 (29.7 - 32.0)	900 (54/7) - 1113 (45/7)	1.162 - 1.259 (29.5 - 32.0)	2.95 (75)	1.02 (26)
ES29A-(M)	1192 - 1300	1.259 - 1.315 (32.0 - 33.4)	1033 (54/7) - 1192 (54/19)	1.246 - 1.338 (31.7 - 34.0)	2.95 (75)	1.02 (26)
ES30A-(M)	1431 - 1590	1.382 - 1.454 (35.1 - 36.9)	1272 (54/19) - 1431 (54/19)	1.382 - 1.465 (35.1 - 37.2)	3.11 (79)	1.22 (31)
ES32A-(M)	1750 - 2000	1.526 - 1.632 (38.8 - 41.5)	1590 (54/19) - 1780 (84/19)	1.545 - 1.602 (39.2 - 40.7)	3.11 (79)	1.22 (31)

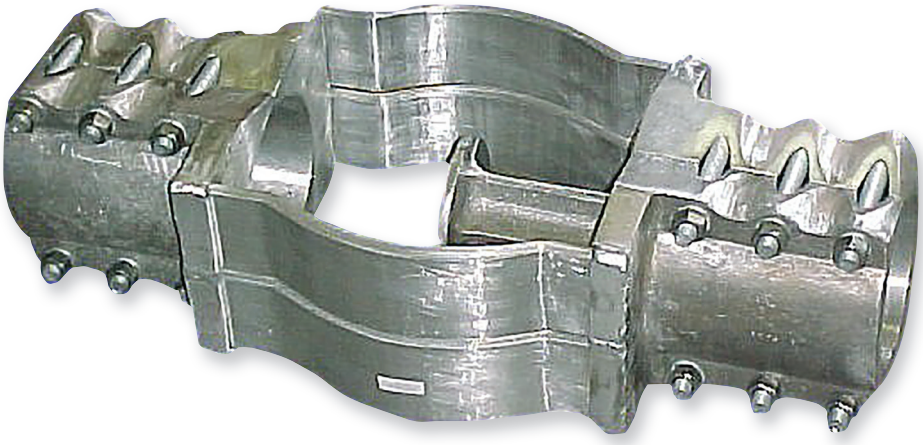

SECTION 8

EXPANSION CONNECTORS

SUBSTATION CONNECTORS - 230KV AND BELOW

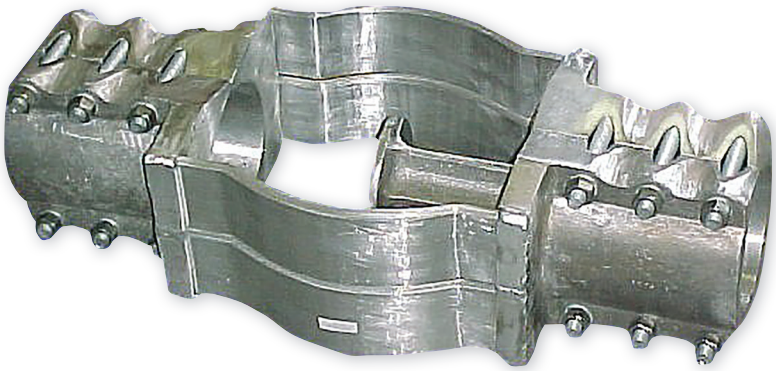

EXPANSION CONNECTORS

PLP **Substation Expansion Connectors** for 230kV and below are designed to be used in situations when an expansion joint is required in a section of bus tube that is fixed between two adjacent locations. The expansion connector allows the connector to expand and contract between the fixed points in response to changes in operating temperature, a short-circuit, or seismic events. In doing so, the expansion joint helps to reduce bending stress on apparatus terminals enhancing reliability and lifetime.

FEATURES AND BENEFITS

- Complete range of sizes for connecting most standard bus tube or stranded conductor
- Solutions for bolted, compression, and weldment applications
- Available in aluminum and bronze, with tin plating capabilities for both materials
- Custom design solutions available to secure your most challenging connections

FE-A

Aluminum Bolted Expansion Connector Tube to Tube with Guide 230kV and Below

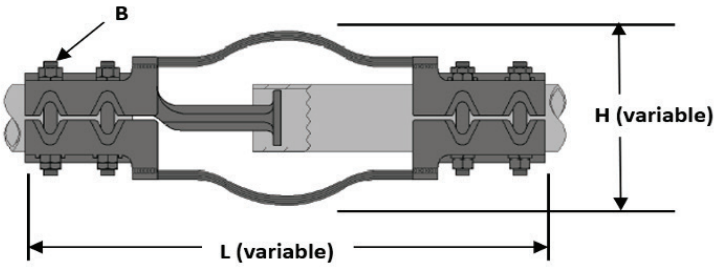

Aluminum alloy expansion to connect two tubes with a guide. Electrical joint compound is recommended for all tube contact surfaces.

CASTINGS: Aluminum Alloy

HARDWARE: Galvanized Steel

See page 136 for special order options such as tin plating, hardware materials and specific angles. Contact PLP for further details, unlisted option and/or special applications.

Example: FE36A36A with Stainless Steel Hardware would be FE36A36A-SS.

Part Number	NPS Tube Diameter	Dimensions in (mm)		
	in (mm)	H	L	B
FE36A36A	1/2 (13)	7.83 (199)	15.20 (386)	1/2 (13)
FE37A37A	3/4 (19)	7.83 (199)	15.20 (386)	1/2 (13)
FE38A38A	1 (25)	7.83 (199)	15.79 (401)	1/2 (13)
FE39A39A	1-1/4 (32)	6.81 (173)	21.61 (549)	1/2 (13)
FE40A40A	1-1/2 (38)	7.60 (193)	22.36 (568)	1/2 (13)
FE41A41A	2 (51)	8.39 (213)	22.36 (568)	5/8 (16)
FE42A42A	2-1/2 (64)	8.86 (225)	22.36 (568)	5/8 (16)
FE43A43A	3 (76)	10.04 (255)	23.78 (604)	5/8 (16)
FE44A44A	3-1/2 (89)	11.06 (281)	24.84 (631)	5/8 (16)
FE45A45A	4 (102)	12.32 (313)	26.10 (663)	5/8 (16)
FE46A46A	4-1/2 (114)	14.72 (374)	30.71 (780)	5/8 (16)
FE47A47A	5 (127)	14.72 (374)	29.33 (745)	5/8 (16)
FE49A49A	6 (152)	14.72 (374)	30.83 (783)	5/8 (16)

FES-A

Aluminum Bolted Expansion Connector Tube to Insulator 230kV and Below

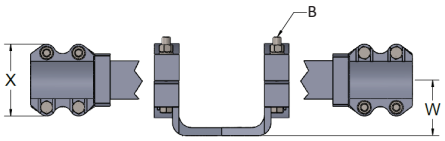

FIGURE 1

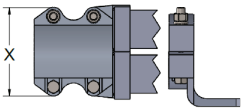

FIGURE 2

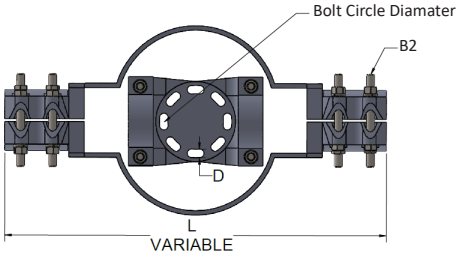

Aluminum alloy expansion to connect two tubes to an insulator bolt circle. Electrical joint compound is recommended for all tube contact surfaces.

CASTINGS: Aluminum Alloy

HARDWARE: Galvanized Steel

See page 136 for special order options such as tin plating, hardware materials and specific angles. Contact PLP for further details, unlisted option and/or special applications.

Example: FES37A-3 with Stainless Steel Hardware would be FES37A-3-SS.

Part Number	Figure	Tube NPS Diameter	Bolt Circle Diameter	Dimensions					
		in (mm)	in (mm)	in (mm)					
				D	L	B	B2	X	W
FES37A-3	1	3/4 (19)	3 (76)	0.56 (14)	22.64 (575)	1/2 (13)	1/2 (13)	2.80 (71)	2.24 (57)
FES37A-5	1	3/4 (19)	5 (127)	0.68 (17)	22.64 (575)	1/2 (13)	1/2 (13)	2.80 (71)	2.24 (57)
FES40A-3	1	1-1/2 (38)	3 (76)	0.56 (14)	24.13 (613)	1/2 (13)	1/2 (13)	3.62 (92)	2.36 (60)
FES40A-5	1	1-1/2 (38)	5 (127)	0.68 (17)	24.13 (613)	1/2 (13)	1/2 (13)	3.62 (92)	2.36 (60)
FES41A-3	1	2 (51)	3 (76)	0.56 (14)	27.68 (703)	5/8 (16)	5/8 (16)	4.57 (116)	2.76 (70)
FES41A-5	1	2 (51)	5 (127)	0.68 (17)	27.68 (703)	5/8 (16)	5/8 (16)	4.57 (116)	2.76 (70)
FES42A-3	1	2-1/2 (64)	3 (76)	0.56 (14)	27.68 (703)	5/8 (16)	5/8 (16)	5.00 (127)	3.27 (83)
FES42A-5	1	2-1/2 (64)	5 (127)	0.68 (17)	27.68 (703)	5/8 (16)	5/8 (16)	5.00 (127)	3.27 (83)
FES43A-3	1	3 (76)	3 (76)	0.56 (14)	27.95 (710)	5/8 (16)	5/8 (16)	5.47 (139)	3.62 (92)
FES43A-5	1	3 (76)	5 (127)	0.68 (17)	27.95 (710)	5/8 (16)	5/8 (16)	5.47 (139)	3.62 (92)
FES44A-3	2	3-1/2 (89)	3 (76)	0.56 (14)	28.66 (728)	5/8 (16)	5/8 (16)	6.10 (155)	4.00 (102)
FES44A-5	2	3-1/2 (89)	5 (127)	0.68 (17)	28.66 (728)	5/8 (16)	5/8 (16)	6.10 (155)	4.00 (102)
FES45A-3	2	4 (102)	3 (76)	0.56 (14)	29.13 (740)	5/8 (16)	5/8 (16)	6.69 (170)	4.49 (114)
FES45A-5	2	4 (102)	5 (127)	0.68 (17)	29.13 (740)	5/8 (16)	5/8 (16)	6.69 (170)	4.49 (114)
FES47A-5	2	5 (127)	5 (127)	0.68 (17)	33.07 (840)	5/8 (16)	5/8 (16)	7.72 (196)	5.24 (133)
FES49A-3	2	6 (152)	3 (76)	0.56 (14)	34.57 (878)	5/8 (16)	5/8 (16)	8.78 (223)	5.75 (146)
FES49A-5	2	6 (152)	5 (127)	0.68 (17)	34.57 (878)	5/8 (16)	5/8 (16)	8.78 (223)	5.75 (146)

FP-A

Aluminum Bolted Expansion Connector Stud to Tube with Guide 230kV and Below

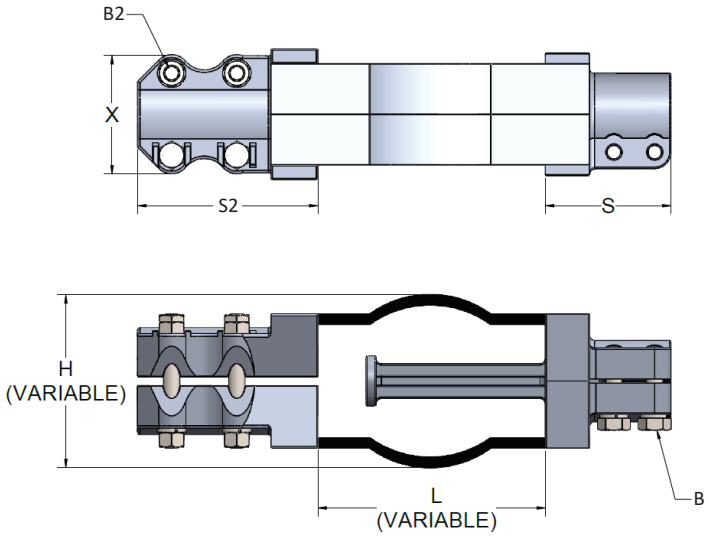

Aluminum alloy expansion to connect a tube to a stud with a guide.Electrical joint compound is recommended for all tube/stud contact surfaces.

CASTINGS: Aluminum Alloy

HARDWARE: Galvanized Steel

See page 136 for special order options such as tin plating, hardware materials and specific angles. Contact PLP for further details, unlisted option and/or special applications.

When ordering, please specify if stud is smooth or threaded with the 'C' suffix followed by the number of threads per inch.

Example of smooth stud: FP5738AC0

Example of stud with 12 threads per inch: FP5738AC12

Part Number	Stud Diameter	Tube NPS Diameter	Dimensions in (mm)						
	in (mm)	in (mm)	H	L	S	S2	B	B2	X
FP5738AC12	1 (25)	1 (25)	6.61 (168)	7.28 (185)	3.86 (98)	4.72 (120)	1/2 (13)	1/2 (13)	3.07 (78)
FP57539AC12	1-1/8 (29)	1-1/4 (32)	7.60 (193)	11.42 (290)	3.86 (98)	4.88 (124)	1/2 (13)	1/2 (13)	3.31 (84)
FP5839AC12	1-1/4 (32)	1-1/4 (32)	7.60 (193)	11.42 (290)	3.86 (98)	4.88 (124)	1/2 (13)	1/2 (13)	3.31 (84)
FP5940AC12	1-1/2 (38)	1-1/2 (38)	7.60 (193)	11.42 (290)	3.86 (98)	5.55 (141)	1/2 (13)	1/2 (13)	3.78 (96)
FP59540AC12	1-1/2 (38)	1-1/2 (38)	7.60 (193)	11.42 (290)	4.25 (108)	5.55 (141)	1/2 (13)	1/2 (13)	3.78 (96)
FP6041AC12	2 (51)	2 (51)	8.39 (213)	11.42 (290)	4.25 (108)	5.43 (138)	1/2 (13)	5/8 (16)	4.61 (117)
FP6142AC12	2-1/2 (64)	2-1/2 (64)	8.39 (213)	11.42 (290)	4.25 (108)	5.43 (138)	1/2 (13)	5/8 (16)	4.92 (125)
FP6243AC12	3 (76)	3 (76)	8.39 (213)	11.42 (290)	4.25 (108)	6.26 (159)	5/8 (16)	5/8 (16)	5.47 (139)

FZ-A

Aluminum Bolted Expansion Connector Tube to Pad with Guide 230kV and Below

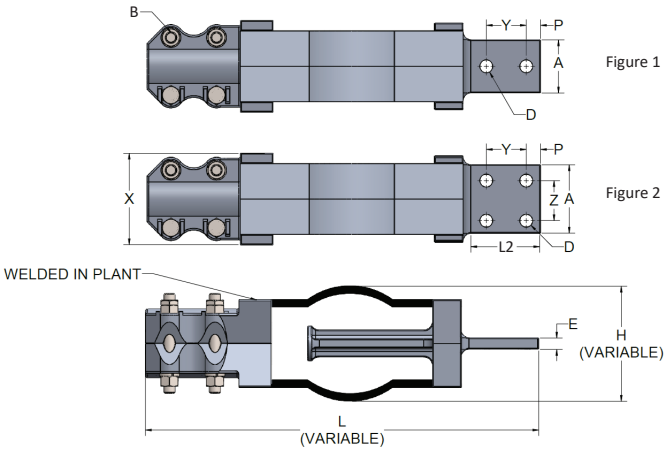

Aluminum alloy expansion to connect one tube to a flat pad with a guide. Electrical joint compound is recommended for all tube/flat contact surfaces.

CASTINGS: Aluminum Alloy

HARDWARE: Galvanized Steel

See page 136 for special order options such as tin plating, hardware materials and specific angles. Contact PLP for further details, unlisted option and/or special applications.

Example: FZ36A-2N with Stainless Steel Hardware would be FZ36A-2N-SS.

Part Number	Figure	Tube NPS Diameter	Dimensions									
		in (mm)	in (mm)									
			A	D	E	H	L	L2	P	B	X	Y/Z
FZ36A-2N	1	1/2 (13)	2.32 (59)	0.56 (14)	0.39 (10)	6.10 (155)	16.77 (426)	3.00 (76)	0.63 (16)	1/2 (13)	2.68 (68)	1.75 (44)
FZ36A-4N	2	1/2 (13)	3.00 (76)	0.56 (14)	0.39 (10)	6.10 (155)	16.77 (426)	3.00 (76)	0.63 (16)	1/2 (13)	2.68 (68)	1.75 (44)
FZ37A-2N	1	3/4 (19)	2.32 (59)	0.56 (14)	0.39 (10)	6.10 (155)	16.77 (426)	3.00 (76)	0.63 (16)	1/2 (13)	2.95 (75)	1.75 (44)
FZ37A-4N	2	3/4 (19)	3.00 (76)	0.56 (14)	0.39 (10)	6.10 (155)	16.77 (426)	3.00 (76)	0.63 (16)	1/2 (13)	2.95 (75)	1.75 (44)
FZ38A-2N	1	1 (25)	2.32 (59)	0.56 (14)	0.51 (13)	6.10 (155)	17.17 (436)	3.00 (76)	0.63 (16)	1/2 (13)	3.03 (77)	1.75 (44)
FZ38A-4N	2	1 (25)	3.00 (76)	0.56 (14)	0.51 (13)	6.10 (155)	17.17 (436)	3.00 (76)	0.63 (16)	1/2 (13)	3.03 (77)	1.75 (44)
FZ39A-2N	1	1-1/4 (32)	2.32 (59)	0.56 (14)	0.51 (13)	6.10 (155)	17.17 (436)	3.00 (76)	0.63 (16)	1/2 (13)	3.31 (84)	1.75 (44)
FZ39A-4N	2	1-1/4 (32)	3.00 (76)	0.56 (14)	0.51 (13)	6.10 (155)	17.17 (436)	3.00 (76)	0.63 (16)	1/2 (13)	3.31 (84)	1.75 (44)
FZ40A-2N	1	1-1/2 (38)	2.32 (59)	0.56 (14)	0.51 (13)	7.60 (193)	22.20 (564)	3.00 (76)	0.63 (16)	1/2 (13)	3.78 (96)	1.75 (44)
FZ40A-4N	2	1-1/2 (38)	3.00 (76)	0.56 (14)	0.51 (13)	7.60 (193)	22.20 (564)	3.00 (76)	0.63 (16)	1/2 (13)	3.78 (96)	1.75 (44)
FZ40A-4N4	2	1-1/2 (38)	4.00 (102)	0.56 (14)	0.51 (13)	7.60 (193)	23.23 (590)	4.00 (102)	1.14 (29)	1/2 (13)	3.78 (96)	1.75 (44)
FZ41A-2N	1	2 (51)	2.32 (59)	0.56 (14)	0.51 (13)	8.39 (213)	21.69 (551)	3.00 (76)	0.63 (16)	5/8 (16)	4.61 (117)	1.75 (44)
FZ41A-4N	2	2 (51)	3.00 (76)	0.56 (14)	0.51 (13)	8.39 (213)	21.69 (551)	3.00 (76)	0.63 (16)	5/8 (16)	4.61 (117)	1.75 (44)
FZ41A-4N4	2	2 (51)	4.00 (102)	0.56 (14)	0.51 (13)	8.39 (213)	22.68 (576)	4.00 (102)	1.14 (29)	5/8 (16)	4.61 (117)	1.75 (44)

FZ-A CONTINUED

Aluminum Bolted Expansion Connector Tube to Pad with Guide 230kV and Below

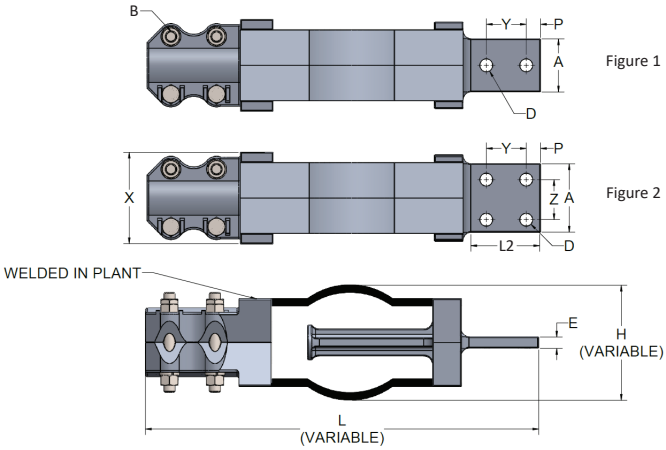

Part Number	Figure	Tube NPS Diameter in (mm)	Dimensions in (mm)									
			A	D	E	H	L	L2	P	B	X	Y/Z
FZ42A-2N	1	2-1/2 (64)	3.00 (76)	0.56 (14)	0.71 (18)	8.86 (225)	21.69 (551)	3.00 (76)	0.63 (16)	5/8 (16)	5.00 (127)	1.75 (44)
FZ42A-4N	2	2-1/2 (64)	3.00 (76)	0.56 (14)	0.71 (18)	8.86 (225)	21.69 (551)	3.00 (76)	0.63 (16)	5/8 (16)	5.00 (127)	1.75 (44)
FZ42A-4N4	2	2-1/2 (64)	4.00 (102)	0.56 (14)	0.71 (18)	8.86 (225)	22.68 (576)	4.00 (102)	1.14 (29)	5/8 (16)	5.00 (127)	1.75 (44)
FZ43A-2N	1	3 (76)	3.00 (76)	0.56 (14)	0.75 (19)	10.04 (255)	22.95 (583)	3.00 (76)	0.63 (16)	5/8 (16)	5.47 (139)	1.75 (44)
FZ43A-4N	2	3 (76)	3.00 (76)	0.56 (14)	0.75 (19)	10.04 (255)	22.95 (583)	3.00 (76)	0.63 (16)	5/8 (16)	5.47 (139)	1.75 (44)
FZ43A-4N4	2	3 (76)	4.00 (102)	0.56 (14)	0.75 (19)	10.04 (255)	23.94 (608)	4.00 (102)	1.14 (29)	5/8 (16)	5.47 (139)	1.75 (44)
FZ44A-2N	1	3-1/2 (89)	4.00 (102)	0.56 (14)	0.98 (25)	10.55 (268)	24.49 (622)	3.00 (76)	0.63 (16)	5/8 (16)	7.13 (181)	1.75 (44)
FZ44A-4N	2	3-1/2 (89)	4.00 (102)	0.56 (14)	0.98 (25)	10.55 (268)	24.49 (622)	3.00 (76)	0.63 (16)	5/8 (16)	7.13 (181)	1.75 (44)
FZ44A-4N4	2	3-1/2 (89)	4.00 (102)	0.56 (14)	0.98 (25)	10.55 (268)	24.49 (622)	4.00 (102)	1.14 (29)	5/8 (16)	7.13 (181)	1.75 (44)
FZ45A-4N	2	4 (102)	4.00 (102)	0.56 (14)	0.98 (25)	12.32 (313)	24.09 (612)	3.00 (76)	0.63 (16)	5/8 (16)	7.13 (181)	1.75 (44)
FZ45A-4N4	2	4 (102)	4.00 (102)	0.56 (14)	0.98 (25)	12.32 (313)	25.12 (638)	4.00 (102)	1.14 (29)	5/8 (16)	7.13 (181)	1.75 (44)
FZ47A-4N	2	5 (127)	6.50 (165)	0.56 (14)	0.98 (25)	17.80 (452)	21.02 (534)	4.00 (102)	0.63 (16)	5/8 (16)	7.83 (199)	1.75 (44)
FZ47A-4N4	2	5 (127)	6.50 (165)	0.56 (14)	0.98 (25)	17.80 (452)	21.02 (534)	4.00 (102)	1.14 (29)	5/8 (16)	7.83 (199)	1.75 (44)

FE

Bronze Bolted Expansion Terminal Tube to Tube with Guide 230kV and Below

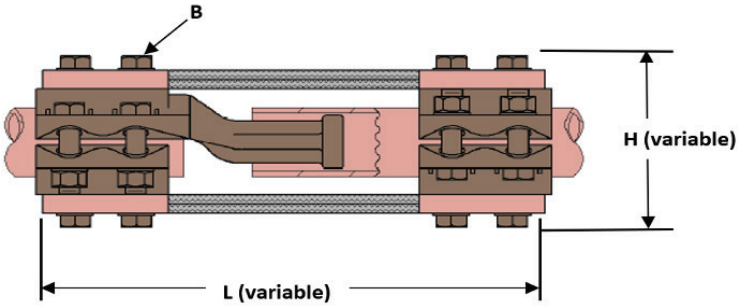

Copper alloy expansion to connect two tubes with a guide. Electrical joint compound is recommended for all tube contact surfaces.

CASTINGS: Copper Alloy

HARDWARE: Silicon Bronze

See page 136 for special order options such as tin plating, hardware materials and specific angles. Contact PLP for further details, unlisted option and/or special applications.

Part Number	NPS Tube Diameter	Dimensions in (mm)		
	in (mm)	H	L	B
FE3737	3/4 (19)	3.03 (77)	9.61 (244)	3/8 (10)
FE3838	1 (25)	3.27 (83)	10.59 (269)	3/8 (10)
FE3939	1-1/4 (32)	4.37 (111)	12.40 (315)	1/2 (13)
FE4040	1-1/2 (38)	4.53 (115)	12.91 (328)	1/2 (13)
FE4141	2 (51)	5.28 (134)	12.91 (328)	1/2 (13)
FE4242	2-1/2 (64)	5.51 (140)	13.66 (347)	1/2 (13)
FE4343	3 (76)	6.46 (164)	14.41 (366)	5/8 (16)
FE4747	4 (102)	9.37 (238)	21.50 (546)	5/8 (16)

FP

Bronze Bolted Expansion Connector Stud to Tube with Guide 230kV and Below

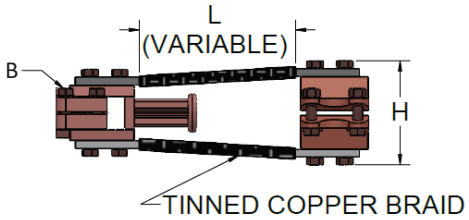

Copper alloy expansion to connect a tube to a stud with a guide. Electrical joint compound is recommended for all tube/stud contact surfaces.

CASTINGS: Copper Alloy

HARDWARE: Silicone Bronze

See page 136 for special order options such as tin plating, hardware materials and specific angles. Contact PLP for further details, unlisted option and/or special applications.

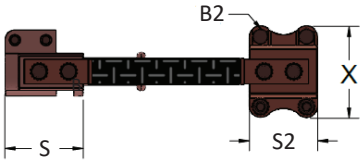

When ordering, please specify if stud is smooth or threaded with the 'C' suffix followed by the number of threads per inch.

Example of smooth stud: FP5539C0

Example of stud with 12 threads per inch: FP5539AC12

Part Number	Stud Diameter	NPS Tube Diameter	Dimensions in (mm)						
	in (mm)	in (mm)	H	L	S	S2	B	B2	X
FP5539C12	1/2 (13)	1-1/4 (32)	4.37 (111)	5.94 (151)	3.70 (94)	3.46 (88)	1/2 (13)	1/2 (13)	3.66 (93)
FP5739C12	1 (25)	1-1/4 (32)	4.37 (111)	5.94 (151)	3.70 (94)	3.46 (88)	1/2 (13)	1/2 (13)	3.66 (93)
FP57539C12	1-1/8 (29)	1-1/4 (32)	4.37 (111)	5.94 (151)	3.70 (94)	3.46 (88)	1/2 (13)	1/2 (13)	3.66 (93)
FP5839C12	1-1/4 (32)	1-1/4 (32)	4.37 (111)	6.46 (164)	3.70 (94)	3.46 (88)	1/2 (13)	1/2 (13)	3.66 (93)
FP5940C12	1-1/2 (38)	1-1/2 (38)	4.53 (115)	6.46 (164)	3.86 (98)	3.46 (88)	1/2 (13)	1/2 (13)	4.21 (107)
FP59340C12	1-5/8 (41)	1-1/2 (38)	4.53 (115)	6.46 (164)	3.86 (98)	3.46 (88)	1/2 (13)	1/2 (13)	4.21 (107)
FP59540C12	1-3/4 (44)	1-1/2 (38)	4.53 (115)	6.46 (164)	3.86 (98)	3.46 (88)	1/2 (13)	1/2 (13)	4.21 (107)
FP6041C12	2 (51)	2 (51)	5.28 (134)	6.46 (164)	3.86 (98)	3.46 (88)	1/2 (13)	1/2 (13)	4.69 (119)
FP60241C12	2-1/8 (54)	2 (51)	5.28 (134)	6.46 (164)	3.86 (98)	3.46 (88)	1/2 (13)	1/2 (13)	4.69 (119)
FP60541C12	2-1/4 (57)	2 (51)	5.28 (134)	6.46 (164)	3.86 (98)	3.46 (88)	1/2 (13)	1/2 (13)	4.69 (119)
FP6142C12	2-1/2 (64)	2-1/2 (64)	5.51 (140)	7.20 (183)	3.86 (98)	3.46 (88)	1/2 (13)	1/2 (13)	5.28 (134)
FP61542C12	2-3/4 (70)	2-1/2 (64)	5.51 (140)	7.20 (183)	4.17 (106)	3.46 (88)	5/8 (16)	1/2 (13)	5.28 (134)
FP6243C12	3 (76)	3 (76)	6.46 (164)	8.03 (204)	4.17 (106)	3.46 (88)	5/8 (16)	5/8 (16)	6.06 (154)

FZ

Bronze Bolted Expansion Connector Tube to Pad with Guide 230kV and Below

Copper alloy expansion to connect one tube to a flat pad with a guide. Electrical joint compound is recommended for all tube/flat contact surfaces.

CASTINGS: Copper Alloy

HARDWARE: Silicone Bronze

See page 136 for special order options such as tin plating, hardware materials and specific angles. Contact PLP for further details, unlisted option and/or special applications.

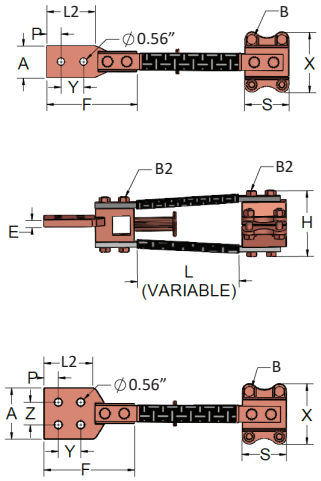

Figure 1
(Single Braid)

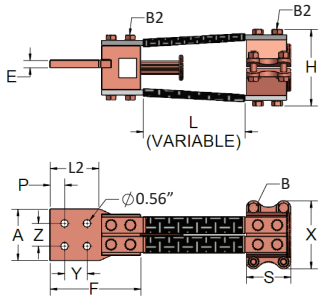

Figure 2
(Double Braid)

Part Number	Figure	Tube NPS Diameter	Dimensions											
		in (mm)	in (mm)											
			A	E	F	H	L	L2	P	S	B	B2	X	Y/Z
FZ37-2N	1	3/4 (19)	2.50 (64)	0.39 (10)	6.38 (162)	2.91 (75)	2.95 (75)	2.50 (64)	0.63 (16)	3.58 (91)	3/8 (10)	3/8 (10)	3.62 (92)	1.75 (44)
FZ37-4N	1	3/4 (19)	3.00 (76)	0.39 (10)	6.38 (162)	2.91 (75)	2.95 (75)	3.00 (76)	0.63 (16)	3.58 (91)	3/8 (10)	3/8 (10)	3.62 (92)	1.75 (44)
FZ37-4N4	1	3/4 (19)	4.00 (102)	0.39 (10)	7.52 (191)	2.91 (75)	2.95 (75)	4.00 (102)	1.14 (29)	3.58 (91)	3/8 (10)	3/8 (10)	3.62 (92)	1.75 (44)
FZ38-2N	1	1 (25)	2.50 (64)	0.39 (10)	6.38 (162)	3.43 (87)	4.06 (103)	2.50 (64)	0.63 (16)	3.46 (88)	3/8 (10)	3/8 (10)	3.46 (88)	1.75 (44)
FZ38-4N	1	1 (25)	3.00 (76)	0.39 (10)	6.38 (162)	3.43 (87)	4.06 (103)	3.00 (76)	0.63 (16)	3.46 (88)	3/8 (10)	3/8 (10)	3.46 (88)	1.75 (44)
FZ38-4N4	1	1 (25)	4.00 (102)	0.39 (10)	7.52 (191)	3.43 (87)	4.06 (103)	4.00 (102)	1.14 (29)	3.46 (88)	3/8 (10)	3/8 (10)	3.46 (88)	1.75 (44)
FZ39-2N	1	1-1/4 (32)	2.50 (64)	0.59 (15)	6.38 (162)	4.65 (118)	5.39 (137)	2.50 (64)	0.63 (16)	3.39 (86)	1/2 (13)	1/2 (13)	3.74 (95)	1.75 (44)
FZ39-4N	1	1-1/4 (32)	3.00 (76)	0.59 (15)	6.38 (162)	4.65 (118)	5.39 (137)	3.00 (76)	0.63 (16)	3.39 (86)	1/2 (13)	1/2 (13)	3.74 (95)	1.75 (44)
FZ39-4N4	1	1-1/4 (32)	4.00 (102)	0.71 (18)	7.52 (191)	4.65 (118)	5.39 (137)	4.00 (102)	1.14 (29)	3.39 (86)	1/2 (13)	1/2 (13)	3.74 (95)	1.75 (44)
FZ40-2N	1	1-1/2 (38)	2.50 (64)	0.59 (15)	6.38 (162)	4.57 (116)	6.46 (164)	2.50 (64)	0.63 (16)	3.39 (86)	1/2 (13)	1/2 (13)	4.17 (106)	1.75 (44)
FZ40-4N	1	1-1/2 (38)	3.00 (76)	0.59 (15)	6.38 (162)	4.57 (116)	6.46 (164)	3.00 (76)	0.63 (16)	3.39 (86)	1/2 (13)	1/2 (13)	4.17 (106)	1.75 (44)
FZ40-4N4	1	1-1/2 (38)	4.00 (102)	0.71 (18)	7.52 (191)	4.57 (116)	6.46 (164)	4.00 (102)	1.14 (29)	3.39 (86)	1/2 (13)	1/2 (13)	4.17 (106)	1.75 (44)
FZ41-4N	1	2 (51)	3.00 (76)	0.59 (15)	6.38 (162)	5.24 (133)	6.46 (164)	3.00 (76)	0.63 (16)	3.46 (88)	1/2 (13)	1/2 (13)	4.72 (120)	1.75 (44)
FZ41-4N4	1	2 (51)	4.00 (102)	0.71 (18)	7.52 (191)	5.24 (133)	6.46 (164)	4.00 (102)	1.14 (29)	3.46 (88)	1/2 (13)	1/2 (13)	4.72 (120)	1.75 (44)

FZ CONTINUED

Bronze Bolted Expansion Connector Tube to Pad with Guide 230kV and Below

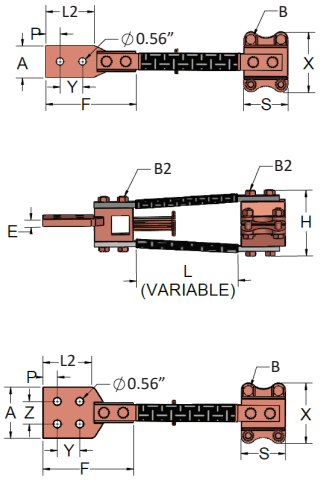

Figure 1
(Single Braid)

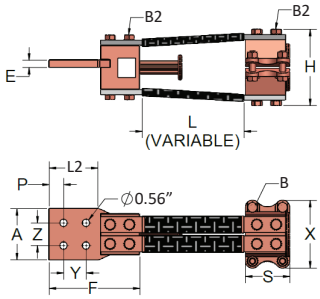

Figure 2
(Double Braid)

Part Number	Figure	Tube NPS Diameter	Dimensions											
		in (mm)	in (mm)											
			A	E	F	H	L	L2	P	S	B	B2	X	Y/Z
FZ42-4N	2	2-1/2 (64)	3.00 (76)	0.59 (15)	6.38 (162)	5.55 (141)	7.20 (183)	3.00 (76)	0.63 (16)	3.46 (88)	1/2 (13)	1/2 (13)	5.28 (134)	1.75 (44)
FZ42-4N4	2	2-1/2 (64)	4.00 (102)	0.71 (18)	7.52 (191)	5.55 (141)	7.20 (183)	4.00 (102)	1.14 (29)	3.46 (88)	1/2 (13)	1/2 (13)	5.28 (134)	1.75 (44)
FZ43-4N	2	3 (76)	3.00 (76)	0.59 (15)	6.38 (162)	6.46 (164)	7.95 (202)	3.00 (76)	0.63 (16)	3.46 (88)	5/8 (16)	1/2 (13)	6.06 (154)	1.75 (44)
FZ43-4N4	2	3 (76)	4.00 (102)	0.71 (18)	7.52 (191)	6.46 (164)	7.95 (202)	4.00 (102)	1.14 (29)	3.46 (88)	5/8 (16)	1/2 (13)	6.06 (154)	1.75 (44)
FZ45-4N4	2	4 (102)	4.00 (102)	0.98 (25)	7.52 (191)	8.15 (207)	10.24 (260)	4.00 (102)	1.14 (29)	3.94 (100)	5/8 (16)	1/2 (13)	7.40 (188)	1.75 (44)

SECTION 9

CAPS

SUBSTATION CONNECTORS - 230KV AND BELOW

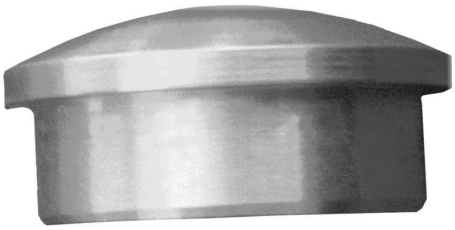

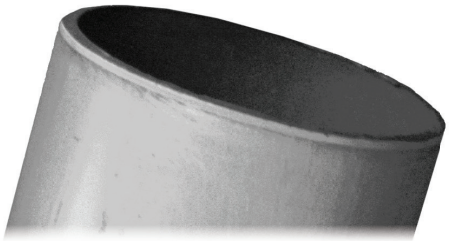

CAPS

PLP **Substation Connectors Caps** for 230kV and below are designed to fit to the end of the bus tube to prevent the entry of moisture, dust, contaminates, and wildlife. Bus tube end caps can be bolted or welded to the busbar from outside or inside. Corona bell end caps also reduce electrostatic losses and radio interference.

FEATURES AND BENEFITS

- Complete range of sizes for standard bus tube
- Available in aluminum and bronze, with tin plating capabilities for both materials
- Custom design solutions available to secure your most challenging connections

TA-A

Aluminum Corona Bell End Cap
Internal Press Fit
230kV and Below

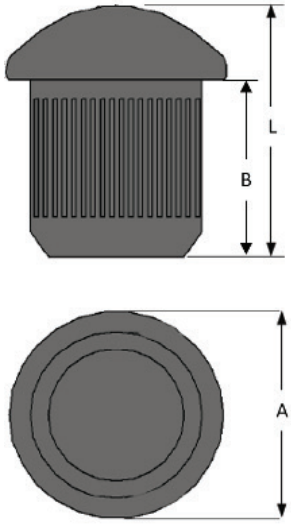

Aluminum alloy corona bell end cap for sealing NPS aluminum tube from rain and excessive humidity. The corona bell reduces electrostatic losses and radio interference.

CASTINGS: Aluminum Alloy

See page 136 for special order options such as tin plating, hardware materials and specific angles. Contact PLP for further details, unlisted option and/or special applications.

Part Number SCH 40	Part Number SCH 80	NPS Tube Diameter	Dimensions in (mm)		
		in (mm)	A	B	L
TA37A	TA37AH	3/4 (19)	1.06 (27)	1.00 (25)	1.30 (33)
TA38A	TA38AH	1 (25)	1.30 (33)	1.00 (25)	1.50 (38)
TA39A	TA39AH	1-1/4 (32)	1.65 (42)	1.46 (37)	1.77 (45)
TA40A	TA40AH	1-1/2 (38)	1.89 (48)	1.46 (37)	1.93 (49)
TA41A	TA41AH	2 (51)	2.36 (60)	1.69 (43)	2.20 (56)
TA42A	TA42AH	2-1/2 (64)	2.87 (73)	1.69 (43)	2.36 (60)
TA43A	TA43AH	3 (76)	3.50 (59)	1.69 (43)	2.36 (60)
TA44A	TA44AH	3-1/2 (89)	4.00 (102)	2.20 (56)	3.27 (83)
TA45A	TA45AH	4 (102)	4.49 (114)	2.28 (58)	3.27 (83)
TA46A	TA46AH	4-1/2 (114)	5.00 (127)	2.64 (67)	3.50 (89)
TA47A	TA47AH	5 (127)	5.55 (141)	2.68 (68)	3.90 (99)
TA49A	TA49AH	6 (152)	6.61 (168)	3.00 (76)	3.90 (99)

TA

Bronze Corona Bell End Cap
Internal Press Fit
230kV and Below

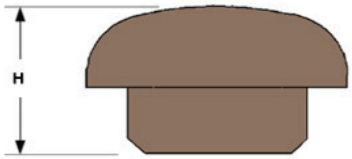

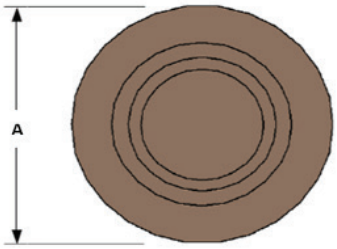

Copper alloy corona bell end cap for sealing NPS copper tube from rain and excessive humidity. The corona bell reduces electrostatic losses and radio interference.

CASTINGS: Copper Alloy

See page 136 for special order options such as tin plating, hardware materials and specific angles. Contact PLP for further details, unlisted option and/or special applications.

Part Number SCH 40	Part Number SCH 80	NPS Tube Diameter	Dimensions in (mm)	
		in (mm)	A	H
TA36	TA36H	1/2 (13)	.83 (21)	.63 (16)
TA37	TA37H	3/4 (19)	1.06 (27)	.67 (17)
TA38	TA38H	1 (25)	1.30 (33)	.75 (19)
TA39	TA39H	1-1/4 (32)	1.65 (42)	.75 (19)
TA40	TA40H	1-1/2 (38)	1.89 (48)	1.06 (27)
TA41	TA41H	2 (51)	2.36 (60)	1.06 (27)
TA42	TA42H	2-1/2 (64)	2.87 (73)	1.38 (35)
TA43	TA43H	3 (76)	3.50 (89)	1.77 (45)
TA44	TA44H	3-1/2 (89)	4.00 (102)	2.05 (52)
TA45	TA45H	4 (102)	4.49 (114)	2.24 (57)
TA46	TA46H	4-1/2 (114)	5.00 (127)	2.64 (67)
TA47	TA47H	5 (127)	5.55 (141)	2.87 (73)

SECTION 10

GROUNDING CONNECTORS

SUBSTATION CONNECTORS - 230KV AND BELOW

GROUNDING CONNECTORS

PLP **Substation Grounding Connectors** for 230kV and below are designed for various configurations of rigid bus tube, stranded conductor and solid rod/conductor to fulfill all grounding arrangement needs. All contact faces are manufactured to maximize contact surface area and provide a superior installed fit.

FEATURES AND BENEFITS

- Complete range of sizes for connecting most standard bus tube, solid rod and stranded/solid conductor
- Tin plating capabilities and specific hardware material options offered
- Custom design solutions available to secure your most challenging connections

TC

Bronze Bolted Grounding Connectors
Two Cable Cross
230kV and Below

Copper alloy connector for two perpendicular cables. Electrical joint compound is recommended for all cable contact surfaces.

CASTINGS: Copper Alloy

HARDWARE: Silicone Bronze

See page 136 for special order options such as tin plating, hardware materials and specific angles. Contact PLP for further details, unlisted option and/or special applications.

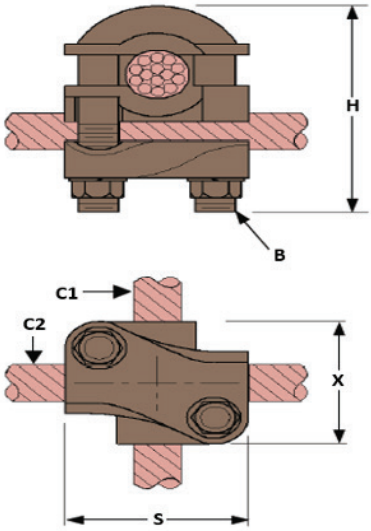

Part Number	Cable AWG/MCM				Dimensions			
	AWG/MCM (C1)	AWG/MCM (C1) Diameter	AWG/MCM (C2)	AWG/MCM (C2) Diameter	in (mm)			
		in (mm)		in (mm)	H	S	B	X
TC1111	4S - 2/0T*	0.204 - 0.419 (5.2 - 10.6)	4S - 2/0T*	0.204 - 0.419 (5.2 - 10.6)	2.68 (68)	1.65 (42)	3/8 (10)	1.65 (42)
TC1411	2/0S - 250*	0.365 - 0.575 (9.3 - 14.6)	4S - 2/0T*	0.365 - 0.575 (9.3 - 14.6)	2.68 (68)	1.81 (46)	3/8 (10)	1.81 (46)
TC1414	2/0S - 250*	0.365 - 0.575 (9.3 - 14.6)	2/0S - 250*	0.365 - 0.575 (9.3 - 14.6)	2.68 (68)	1.81 (46)	3/8 (10)	1.81 (46)
TC1919	300 - 500	0.630 - 0.814 (16.0 - 20.7)	300 - 500	0.630 - 0.814 (16.0 - 20.7)	3.62 (92)	2.52 (64)	1/2 (13)	2.52 (64)

*S denotes solid wire, and T denotes standard wire.

TD

Bronze Bolted Grounding Connectors Two Cables to Flat, Double Body 230kV and Below

Copper alloy connector for clamping two cables to a flat surface. Electrical joint compound is recommended for all cable contact surfaces.

CASTINGS: Copper Alloy

HARDWARE: Silicone Bronze

See page 136 for special order options such as tin plating, hardware materials and specific angles. Contact PLP for further details, unlisted option and/or special applications.

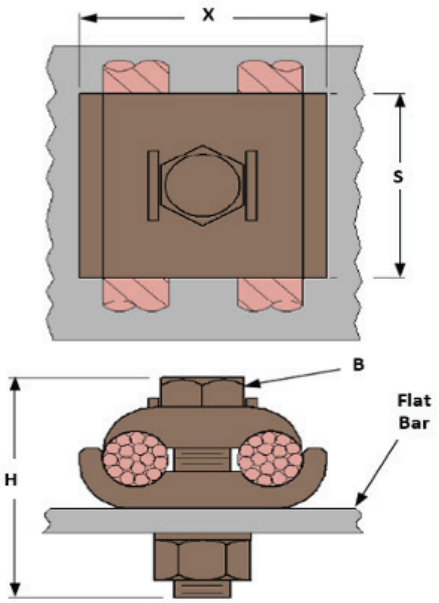

Part Number	Cable AWG/MCM		Flat Bar Thickness	Dimensions			
	AWG/MCM	AWG/MCM Diameter		in (mm)			
		in (mm)	in (mm)	H	X	B	S
TD1111	4S - 2/0T*	0.204 - 0.419 (5.2 - 10.6)	0.250 (6.4)	2.24 (57)	1.77 (45)	3/8 (10)	1.50 (38)
TD1414	2/0S - 250*	0.365 - 0.575 (9.3 - 14.6)	0.250 (6.4)	2.32 (59)	2.17 (55)	1/2 (13)	1.50 (38)
TD1919	300 - 500	0.630 - 0.814 (16.0 - 20.7)	0.250 (6.4)	2.76 (70)	2.64 (67)	1/2 (13)	1.50 (38)

*S denotes solid wire, and T denotes standard wire.

TDH

Bronze Bolted Grounding Connectors Two Cables to Tube, 90-Degrees 230kV and Below

Copper alloy connector for clamping two cables to a tube at 90-degrees. Electrical joint compound is recommended for all cable contact surfaces.

CASTINGS: Copper Alloy

HARDWARE: Silicone Bronze

See page 136 for special order options such as tin plating, hardware materials and specific angles. Contact PLP for further details, unlisted option and/or special applications.

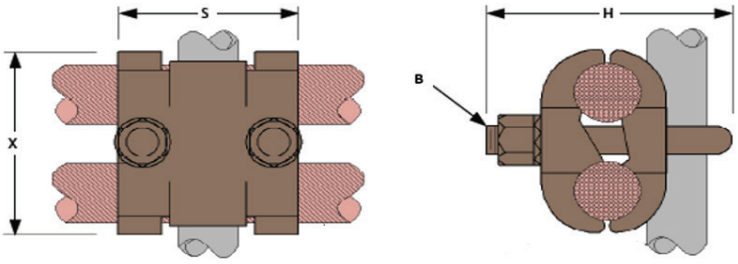

Part Number	Tube NPS Diameter	Cable AWG/MCM		Dimensions			
		AWG/MCM	AWG/MCM Diameter	in (mm)			
	in (mm)		in (mm)	H	S	B	X
TDH564T	3/8 (10)	8S - 4T*	0.129 - 0.232 (3.3 - 5.9)	2.76 (70)	1.69 (43)	3/8 (10)	1.97 (50)
TDH5611	3/8 (10)	4S - 2/0T*	0.204 - 0.419 (5.2 - 10.6)	2.76 (70)	1.69 (43)	3/8 (10)	1.97 (50)
TDH5614	3/8 (10)	2/0S - 250*	0.365 - 0.575 (9.3 - 14.6)	2.76 (70)	1.69 (43)	3/8 (10)	1.97 (50)
TDH5619	3/8 (10)	300 - 500	0.630 - 0.814 (16.0 - 27.0)	3.27 (83)	2.80 (71)	1/2 (13)	3.31 (84)
TDH5625	3/8 (10)	600 - 800	0.893 - 1.031 (22.7 - 26.2)	3.27 (83)	2.80 (71)	1/2 (13)	3.31 (84)

*S denotes solid wire, and T denotes standard wire.

TDV

Bronze Bolted Grounding Connectors
Two Cables to Tube, Parallel
230kV and Below

Copper alloy connector for clamping two cables to a tube in a parallel. Electrical joint compound is recommended for all cable contact surfaces.

CASTINGS: Copper Alloy

HARDWARE: Silicone Bronze

See page 136 for special order options such as tin plating, hardware materials and specific angles. Contact PLP for further details, unlisted option and/or special applications.

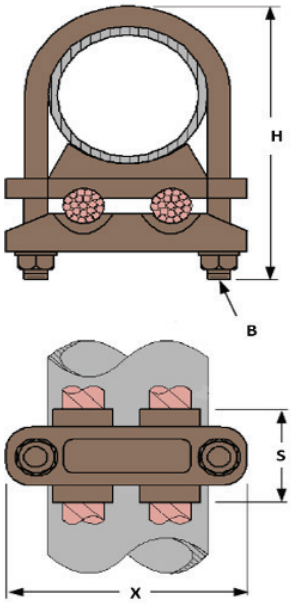

Part Number	Tube NPS Diameter	Cable AWG/MCM		Dimensions			
		AWG/MCM	AWG/MCM Diameter	in (mm)			
	in (mm)		in (mm)	H	S	B	X
TDV3811	1 (25)	4S - 2/0T*	0.204 - 0.419 (5.2 - 10.6)	3.27 (83)	1.34 (34)	3/8 (10)	2.91 (74)
TDV3814	1 (25)	2/0S - 250*	0.365 - 0.575 (9.3 - 14.6)	3.27 (83)	1.34 (34)	3/8 (10)	2.91 (74)
TDV4011	1-1/2 (38)	4S - 2/0T*	0.204 - 0.419 (5.2 - 10.6)	3.86 (98)	1.34 (34)	3/8 (10)	3.31 (84)
TDV4014	1-1/2 (38)	2/0S - 250*	0.365 - 0.575 (9.3 - 14.6)	3.86 (98)	1.34 (34)	3/8 (10)	3.31 (84)
TDV4111	2 (51)	4S - 2/0T*	0.204 - 0.419 (5.2 - 10.6)	4.49 (114)	1.30 (33)	3/8 (10)	3.58 (91)
TDV4114	2 (51)	2/0S - 250*	0.365 - 0.575 (9.3 - 14.6)	4.49 (114)	1.30 (33)	3/8 (10)	3.58 (91)
TDV4211	2-1/2 (64)	4S - 2/0T*	0.204 - 0.419 (5.2 - 10.6)	5.04 (128)	1.46 (37)	3/8 (10)	4.09 (104)
TDV4214	2-1/2 (64)	2/0S - 250*	0.365 - 0.575 (9.3 - 14.6)	5.04 (128)	1.46 (37)	3/8 (10)	4.09 (104)
TDV4311	3 (76)	4S - 2/0T*	0.204 - 0.419 (5.2 - 10.6)	5.67 (144)	1.50 (38)	3/8 (10)	4.80 (122)
TDV4314	3 (76)	2/0S - 250*	0.365 - 0.575 (9.3 - 14.6)	5.67 (144)	1.50 (38)	3/8 (10)	4.80 (122)
TDV4411	3-1/2 (89)	4S - 2/0T*	0.204 - 0.419 (5.2 - 10.6)	6.22 (158)	1.50 (38)	3/8 (10)	5.31 (135)
TDV4414	3-1/2 (89)	2/0S - 250*	0.365 - 0.575 (9.3 - 14.6)	6.22 (158)	1.50 (38)	3/8 (10)	5.31 (135)
TDV4511	4 (102)	4S - 2/0T*	0.204 - 0.419 (5.2 - 10.6)	7.40 (188)	1.61 (41)	3/8 (10)	5.98 (152)
TDV4514	4 (102)	2/0S - 250*	0.365 - 0.575 (9.3 - 14.6)	7.40 (188)	1.61 (41)	3/8 (10)	5.98 (152)

*S denotes solid wire, and T denotes standard wire.

TE

Bronze Bolted Grounding Connectors One Cable to Flat, Double Body 230kV and Below

Copper alloy connector for clamping one cable to a flat surface. Electrical filler compound is recommended for all cable contact surfaces.

CASTINGS: Copper Alloy

HARDWARE: Silicone Bronze

See page 136 for special order options such as tin plating, hardware materials and specific angles. Contact PLP for further details, unlisted option and/or special applications.

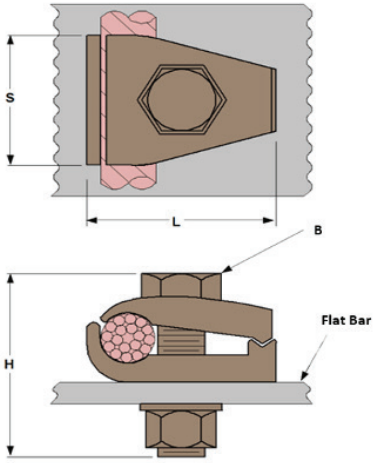

Part Number	Cable AWG/MCM		Flat Bar Thickness	Dimensions in (mm)			
	AWG/MCM	AWG/MCM Diameter in (mm)	in (mm)	H	L	B	S
TE4T	8S - 4T*	0.129 - 0.232 (3.3 - 5.9)	0.250 (6.4)	1.97 (50)	1.54 (39)	3/8 (10)	1.10 (28)
TE20	4S - 2/0T*	0.204 - 0.419 (5.2 - 10.6)	0.250 (6.4)	1.97 (50)	1.54 (39)	3/8 (10)	1.10 (28)
TE20-M1	4S - 2/0T*	0.204 - 0.419 (5.2 - 10.6)	0.906 (23)	2.76 (70)	1.54 (39)	3/8 (10)	1.10 (28)
TE250	2/0S - 250*	0.365 - 0.575 (9.3 - 14.6)	0.250 (6.4)	2.28 (58)	1.97 (50)	1/2 (13)	1.50 (38)
TE250-M1	2/0S - 250*	0.365 - 0.575 (9.3 - 14.6)	0.750 (19)	2.83 (72)	1.97 (50)	1/2 (13)	1.50 (38)
TE250-M2	2/0S - 250*	0.365 - 0.575 (9.3 - 14.6)	0.500 (12.7)	2.52 (64)	1.97 (50)	1/2 (13)	1.50 (38)
TE500	300 - 500	0.630 - 0.814 (16.0 - 20.7)	0.250 (6.4)	2.83 (72)	2.44 (62)	1/2 (13)	1.50 (38)
TE500-M1	300 - 500	0.630 - 0.814 (16.0 - 20.7)	0.906 (23)	3.31 (84)	2.44 (62)	1/2 (13)	1.50 (38)
TE750	550 - 750	0.630 - 0.814 (16.0 - 20.7)	0.250 (6.4)	3.43 (87)	2.87 (73)	5/8 (16)	1.89 (48)

*S denotes solid wire, and T denotes standard wire.

TG

Bronze Bolted Grounding Connectors
Braid to Tube
230kV and Below

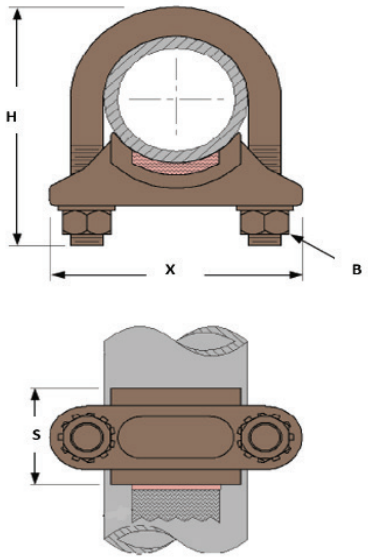

Copper alloy connector for clamping a tin platted braid to a tube. Electrical joint compound is recommended for all tube/braid contact surfaces.

CASTINGS: Copper Alloy

HARDWARE: Silicone Bronze

See page 136 for special order options such as tin plating, hardware materials and specific angles. Contact PLP for further details, unlisted option and/or special applications.

Part Number	Tube NPS Diameter	Width of Braid	Dimensions in (mm)			
	in (mm)	in (mm)	H	S	B	X
TG39-1	1-1/4 (32)	1 (25)	3.19 (81)	1.57 (40)	3/8 (10)	2.91 (74)
TG40-1	1-1/2 (38)	1 (25)	3.43 (87)	1.57 (40)	3/8 (10)	3.19 (81)
TG40-15	1-1/2 (38)	1-1/2 (38)	3.43 (87)	1.57 (40)	3/8 (10)	3.19 (81)
TG41-1	2 (51)	1 (25)	4.21 (107)	1.57 (40)	3/8 (10)	3.62 (92)
TG41-15	2 (51)	1-1/2 (38)	4.21 (107)	1.57 (40)	3/8 (10)	3.62 (92)
TG41-2	2 (51)	2 (51)	4.21 (107)	1.73 (44)	1/2 (13)	4.06 (103)
TG42-15	2-1/2 (64)	1-1/2 (38)	4.84 (123)	1.85 (47)	1/2 (13)	4.49 (114)
TG42-2	2-1/2 (64)	2 (51)	4.84 (123)	1.85 (47)	1/2 (13)	4.49 (114)
TG42-25	2-1/2 (64)	2-1/2 (64)	4.84 (123)	1.85 (47)	1/2 (13)	4.49 (114)
TG43-1	3 (76)	1 (25)	5.71 (145)	2.01 (51)	1/2 (13)	5.20 (132)
TG43-15	3 (76)	1-1/2 (38)	5.71 (145)	2.01 (51)	1/2 (13)	5.20 (132)
TG43-2	3 (76)	2 (51)	5.71 (145)	2.01 (51)	1/2 (13)	5.20 (132)
TG43-25	3 (76)	2-1/2 (64)	5.71 (145)	2.01 (51)	1/2 (13)	5.20 (132)

TR

Bronze Bolted Grounding Connectors One Cable to Tube, 90-Degrees or Parallel 230kV and Below

Copper alloy connector for clamping one cable to a tube at 90-degrees or in parallel. Electrical joint compound is recommended for all cable contact surfaces.

CASTINGS: Copper Alloy

HARDWARE: Silicone Bronze

See page 136 for special order options such as tin plating, hardware materials and specific angles. Contact PLP for further details, unlisted option and/or special applications.

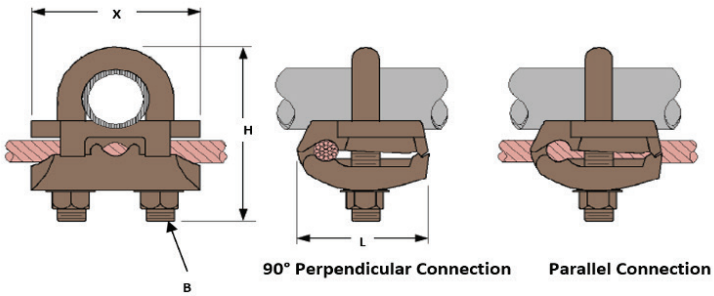

Part Number	Tube NPS Diameter	Cable AWG/MCM		Dimensions			
		AWG/MCM	AWG/MCM Diameter	in (mm)			
	in (mm)		in (mm)	H	L	B	X
TR564T	3/8 (10)	8S - 4T*	0.129 - 0.232 (3.3 - 5.9)	2.56 (65)	1.57 (40)	3/8 (10)	2.05 (52)
TR5611	3/8 (10)	4S - 2/0T*	0.204 - 0.419 (5.2 - 10.6)	2.56 (65)	1.57 (40)	3/8 (10)	2.05 (52)
TR5614	3/8 (10)	2/0S - 250*	0.365 - 0.575 (9.3 - 14.6)	2.83 (72)	1.81 (46)	3/8 (10)	2.13 (54)
TR3711	1/2 - 3/4 (13 - 19)	4S - 2/0T*	0.204 - 0.419 (5.2 - 10.6)	2.99 (76)	1.46 (37)	3/8 (10)	2.36 (60)
TR3714	1/2 - 3/4 (13 - 19)	2/0S - 250*	0.365 - 0.575 (9.3 - 14.6)	2.99 (76)	1.77 (45)	3/8 (10)	2.36 (60)
TR3811	1 (25)	4S - 2/0T*	0.204 - 0.419 (5.2 - 10.6)	3.23 (82)	1.77 (45)	3/8 (10)	2.83 (72)
TR3814	1 (25)	2/0S - 250*	0.365 - 0.575 (9.3 - 14.6)	3.23 (82)	1.77 (45)	3/8 (10)	2.83 (72)
TR3911	1-1/4 (32)	4S - 2/0T*	0.204 - 0.419 (5.2 - 10.6)	3.50 (89)	1.57 (40)	3/8 (10)	3.03 (77)
TR3914	1-1/4 (32)	2/0S - 250*	0.365 - 0.575 (9.3 - 14.6)	3.50 (89)	1.57 (40)	3/8 (10)	3.03 (77)
TR4011	1-1/2 (38)	4S - 2/0T*	0.204 - 0.419 (5.2 - 10.6)	4.06 (103)	1.77 (45)	3/8 (10)	3.27 (83)
TR4014	1-1/2 (38)	2/0S - 250*	0.365 - 0.575 (9.3 - 14.6)	4.06 (103)	1.77 (45)	3/8 (10)	3.27 (83)
TR4111	2 (51)	4S - 2/0T*	0.204 - 0.419 (5.2 - 10.6)	4.41 (112)	1.69 (43)	3/8 (10)	3.74 (95)
TR4114	2 (51)	2/0S - 250*	0.365 - 0.575 (9.3 - 14.6)	4.41 (112)	1.69 (43)	3/8 (10)	3.74 (95)
TR4115	2 (51)	2/0S - 300*	0.365 - 0.575 (9.3 - 14.6)	4.41 (112)	1.69 (43)	3/8 (10)	3.74 (95)
TR4211	2-1/2 (64)	4S - 2/0T*	0.204 - 0.419 (5.2 - 10.6)	4.84 (123)	2.20 (56)	3/8 (10)	4.25 (108)
TR4214	2-1/2 (64)	2/0S - 250*	0.365 - 0.575 (9.3 - 14.6)	4.84 (123)	2.20 (56)	3/8 (10)	4.25 (108)
TR4311	3 (76)	4S - 2/0T*	0.204 - 0.419 (5.2 - 10.6)	5.71 (145)	1.81 (46)	3/8 (10)	4.80 (122)
TR4314	3 (76)	2/0S - 250*	0.365 - 0.575 (9.3 - 14.6)	5.71 (145)	1.81 (46)	3/8 (10)	4.80 (122)

*S denotes solid wire, and T denotes standard wire.

TSE

Bronze Bolted Grounding Connectors
One Cable to Flat, Single Body
230kV and Below

Copper alloy connector for clamping one cable to a flat surface. Electrical joint compound is recommended for all cable contact surfaces.

CASTINGS: Copper Alloy

HARDWARE: Silicone Bronze

See page 136 for special order options such as tin plating, hardware materials and specific angles. Contact PLP for further details, unlisted option and/or special applications.

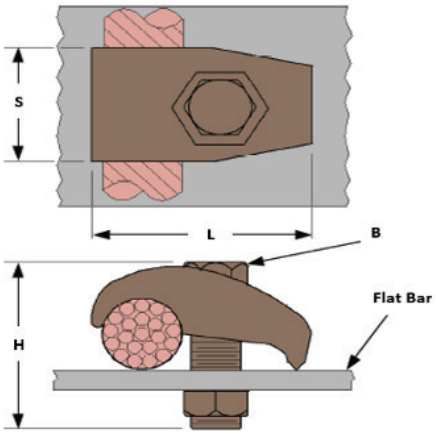

Part Number	Cable AWG/MCM		Flat Bar Thickness	Dimensions			
	AWG/MCM	AWG/MCM Diameter		in (mm)			
		in (mm)	in (mm)	H	S	B	S
TSE20	4S - 2/0T*	0.204 - 0.419 (5.2 - 10.6)	0.250 (6.4)	1.46 (37)	1.54 (39)	3/8 (10)	1.10 (28)
TSE20-M1	4S - 2/0T*	0.204 - 0.419 (5.2 - 10.6)	0.500 (12.7)	1.69 (43)	1.54 (39)	3/8 (10)	1.10 (28)
TSE20-M2	4S - 2/0T*	0.204 - 0.419 (5.2 - 10.6)	0.906 (23)	2.20 (56)	1.54 (39)	3/8 (10)	1.10 (28)
TSE250	2/0S - 250*	0.365 - 0.575 (9.3 - 14.6)	0.250 (6.4)	1.77 (45)	1.97 (50)	1/2 (13)	1.50 (38)
TSE250-M1	2/0S - 250*	0.365 - 0.575 (9.3 - 14.6)	0.500 (12.7)	2.28 (58)	1.97 (50)	1/2 (13)	1.50 (38)
TSE500	300 - 500	0.630 - 0.814 (16.0 - 20.7)	0.250 (6.4)	2.28 (58)	2.44 (62)	1/2 (13)	1.50 (38)

*S denotes solid wire, and T denotes standard wire.

TT

Bronze Bolted Grounding Connectors Three Cables to Tube, Parallel 230kV and Below

Copper alloy connector for clamping three cables to a tube in a parallel. Electrical joint compound is recommended for all cable contact surfaces.

CASTINGS: Copper Alloy

HARDWARE: Silicone Bronze

See page 136 for special order options such as tin plating, hardware materials and specific angles. Contact PLP for further details, unlisted option and/or special applications.

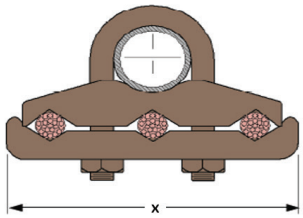

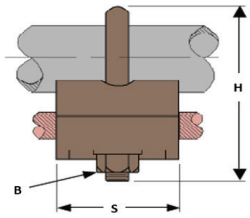

Part Number	Tube NPS Diameter	Cable AWG/MCM		Dimensions			
		AWG/MCM	AWG/MCM Diameter	in (mm)			
	in (mm)		in (mm)	H	S	B	X
TT5611	3/8 (10)	4S - 2/0T*	0.204 - 0.419 (5.2 - 10.6)	2.83 (72)	1.54 (39)	3/8 (10)	3.27 (83)
TT5614	3/8 (10)	2/0S - 250*	0.365 - 0.575 (9.3 - 14.6)	3.35 (85)	1.61 (41)	1/2 (13)	3.70 (94)
TT5619	3/8 (10)	300 - 500	0.630 - 0.814 (16.0 - 20.7)	3.58 (91)	1.77 (45)	1/2 (13)	4.29 (109)
TT3714	1/2 - 3/4 (13 - 19)	2/0S - 250*	0.365 - 0.575 (9.3 - 14.6)	3.58 (91)	1.73 (44)	1/2 (13)	4.17 (106)
TT3811	1 (25)	4S - 2/0T*	0.204 - 0.419 (5.2 - 10.6)	3.74 (95)	1.73 (44)	1/2 (13)	4.17 (106)
TT3814	1 (25)	2/0S - 250*	0.365 - 0.575 (9.3 - 14.6)	3.74 (95)	1.73 (44)	1/2 (13)	4.17 (106)
TT4211	2-1/2 (64)	4S - 2/0T*	0.204 - 0.419 (5.2 - 10.6)	5.24 (133)	1.73 (44)	1/2 (13)	6.10 (155)

*S denotes solid wire, and T denotes standard wire.

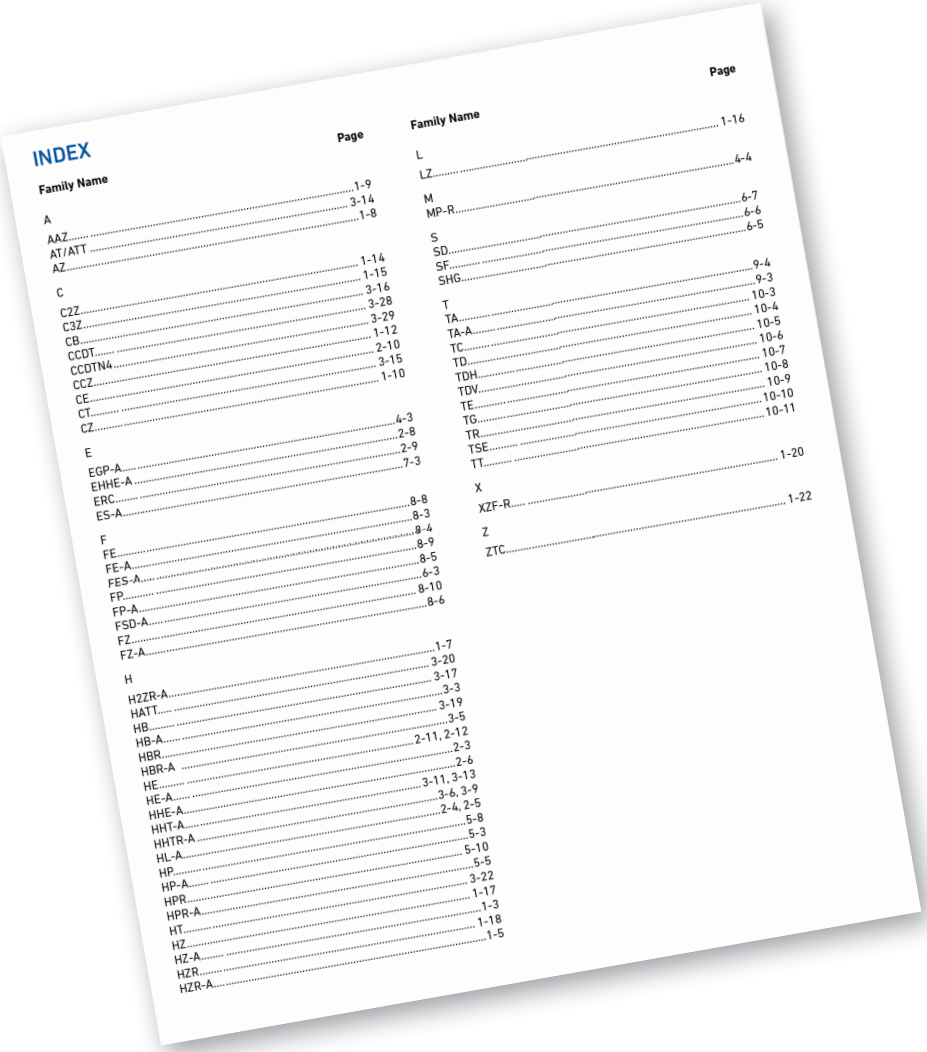

INDEX

Family Name	Page
A	
AAZ	1-9
AT/ATT	3-14
AZ	1-8
C	
C2Z	1-14
C3Z	1-15
CB	3-16
CCDT	3-28
CCDTN4	3-29
CCZ	1-12
CE	2-10
CT	3-15
CZ	1-10
E	
EGP-A	4-3
EHHE-A	2-8
ERC	2-9
ES-A	7-3
F	
FE	8-8
FE-A	8-3
FES-A	8-4
FP	8-9
FP-A	8-5
FSD-A	6-3
FZ	8-10
FZ-A	8-6
H	
H2ZR-A	1-7
HATT	3-20
HB	3-17
HB-A	3-3
HBR	3-19
HBR-A	3-5
HE	2-11, 2-12
HE-A	2-3
HHE-A	2-6
HHT-A	3-11, 3-13
HHTR-A	3-6, 3-9
HL-A	2-4, 2-5
HP	5-8
HP-A	5-3
HPR	5-10
HPR-A	5-5
HT	3-22
HZ	1-17
HZ-A	1-3
HZR	1-18
HZR-A	1-5
L	
LZ	1-16
M	
MP-R	4-4
S	
SD	6-7
SF	6-6
SHG	6-5
T	
TA	9-4
TA-A	9-3
TC	10-3
TD	10-4
TDH	10-5
TDV	10-6
TE	10-7
TG	10-8
TR	10-9
TSE	10-10
TT	10-11
X	
XZF-R	1-20
Z	
ZTC	1-22

SECTION 11

APPENDIX & INDEX

SUBSTATION CONNECTORS - 230KV AND BELOW

ORDER OPTIONS SUFFIX LIST

A suffix added to a catalog number indicates a modification to be made to the standard cataloged item. The suffixes listed below display various options available. Consult PLP for further details, unlisted options, and/or special applications.

Suffix	Description
E	Tin plate entire connector assembly (excluding hardware)
AA	Anodized aluminum hardware
GA	Galvanized aluminum hardware
GS	Galvanized steel hardware
SB	Silicon bronze hardware
SS	Stainless steel hardware
15/30/45/60/90	Specific angle of connector

Always add a hyphen (-) after the catalog part number to clearly identify options suffix.
Example of AZ10 with tin plating option suffix would be AZ10-E.

If various options are needed, always put them in order from top to bottom of suffix options list.
EXAMPLE: AZ10-ESS90 is AZ10 with tin plating, stainless steel hardware, and 90-degrees angle options.

PLP ELECTRICAL JOINT COMPOUND (EJC)

PLP Electrical Joint Compound should be applied to bolted and compression connections immediately after brushing/cleaning to drastically reduce galvanic corrosion, prevent re-oxidation, and prohibit future ingress of air and moisture. PLP Electrical Joint Compound is extremely adhesive, resistant to water and has high-temperature resistance to ensure continuous reliable operations under all situations. For low-voltage connections, excess grease should be spread out along the union after installation. For extra high-voltage connections, excess grease must be removed.

Part Number	Description	Size
EJC-ST-250ML	Aluminum to Aluminum/Copper Connections. Low tension (10% RBS) up to 180° C with Zinc grit/particles[1]	250 Milliliter Bottle
EJC-ST-1L		1 Liter Tube
EJC-ST-1G		1 Gallon Can
EJC-TC-250ML	Aluminum to Aluminum/Copper Connections. Full tension (100% RBS) up to 180° C without Zinc grit/particles[1]	250 Milliliter Bottle
EJC-TC-1L		1 Liter Tube
EJC-TC-1G		1 Gallon Can
EJC-CU-250ML	Copper to Copper Connections. Low tension (10% RBS) up to 180° C with Copper grit/particles[1]	250 Milliliter Bottle
EJC-CU-1L		1 Liter Tube
EJC-CU-1G		1 Gallon Can

[1] Contains conductive Zinc or Copper granules suspended in viscous petroleum base. Under pressure these granules make high-pressure contact points with the parent metal to create a sound electrical connection, while the base material seals the joint to prevent further corrosion.

CONDUCTOR SIZE TABLES - ACSR

Code Name	Size	Stranding Al/St	Complete Cable OD	Weight per 1000 ft	Ampacity[1]
	kcmil		(in)	(lb)	(amps)
Turkey	6	6/1	0.198	36	105
Swan	4	6/1	0.250	57	140
Swanate	4	7/1	0.257	67	140
Sparrow	2	6/1	0.316	91	184
Sparate	2	7/1	0.325	107	184
Robin	1	6/1	0.354	115	212
Rave	1/0	6/1	0.398	145	242
Quail	2/0	6/1	0.447	183	276
Pigeon	3/0	6/1	0.502	231	315
Penguin	4/0	6/1	0.563	291	357
Waxwing	266.8	18/1	0.609	289	449
Partridge	300	26/7	0.642	367	475
Ostrich	336.4	26/7	0.680	412	492
Merlin	336.4	18/1	0.684	365	519
Linnet	336.4	26/7	0.720	462	529
Oriole	336.4	30/7	0.741	526	535
Chickadee	397.5	18/1	0.743	431	576
Brant	397.5	24/7	0.772	511	584
Ibis	397.5	26/7	0.783	546	587
Lark	397.5	30/7	0.806	622	594
Pelican	477	18/1	0.814	517	646
Flicker	477	24/7	0.846	614	655
Hawk	477	26/7	0.858	656	659
Hen	477	30/7	0.883	745	666
Osprey	556.5	18/1	0.879	603	711
Parakeet	556.5	24/7	0.914	716	721
Dove	556.5	26/7	0.927	765	726
Eagle	556.5	30/7	0.953	871	734

[1] Current ratings based on 75° C conductor temperature, 25° C ambient temperature 0.5, 2 ft/sec wind in sun.

CONDUCTOR SIZE TABLES - ACSR CONTINUED

Code Name	Size	Stranding Al/St	Complete Cable OD	Weight per 1000 ft	Ampacity[1]
	kcmil		(in)	(lb)	(amps)
Peacock	605	24/7	0.953	779	760
Squab	605	26/7	0.966	832	765
Wood Duck	605	30/7	0.994	946	774
Tel	605	30/19	0.994	939	773
Kingbird	636	18/1	0.940	690	773
Swift	636	36/1	0.930	643	769
Rook	636	24/7	0.977	818	784
Grosbeak	636	26/7	0.991	874	789
Scoter	636	30/7	1.019	995	798
Egret	636	30/19	1.019	987	798
Flamingo	666.6	24/7	1.000	858	807
Gannet	666.6	26/7	1.014	916	812
Stilt	715.5	24/7	1.036	920	844
Starling	715.5	26/7	1.051	984	849
Redwing	715.5	30/19	1.081	1,110	859
Coot	795	36/1	1.040	804	884
Drake	795	26/7	1.107	1,093	907
Tern	795	45/7	1.063	895	887
Condor	795	54/7	1.092	1,023	889
Mallard	795	30/19	1.140	1,233	918
Ruddy	900	45/7	1.131	1,013	958
Canary	900	54/7	1.162	1,158	961
Rail	954	45/7	1.165	1,074	993
Cardinal	954	54/7	1.196	1,227	996
Ortolan	1033.5	45/7	1.212	1,163	1043
Curlew	1033.5	54/7	1.245	1,330	1047
Bluejay	1113	45/7	1.258	1,253	1092

[1] Current ratings based on 75° C conductor temperature, 25° C ambient temperature 0.5, 2 ft/sec wind in sun.

CONDUCTOR SIZE TABLES - ACSR CONTINUED

Code Name	Size	Stranding Al/St	Complete Cable OD	Weight per 1000 ft	Ampacity[1]
	kcmil		(in)	(lb)	(amps)
Finch	1113	54/19	1.292	1,429	1093
Bunting	1192.5	45/7	1.302	1,342	1139
Grackle	1192.5	54/19	1.337	1,531	1140
Bittern	1272	45/7	1.345	1,432	1184
Pheasant	1272	54/19	1.381	1,633	1187
Dipper	1351.5	45/7	1.386	1,521	1229
Martin	1351.5	54/19	1.424	1,735	1232
Bobolink	1431	45/7	1.427	1,611	1272
Lapwing	1590	45/7	1.504	1,790	1354
Falcon	1590	54/19	1.544	2,041	1359
Chukar	1780	84/19	1.602	2,071	1453
Bluebird	2156	84/19	1.762	2,509	1623
Kiwi	2167	72/7	1.735	2,300	1607

[1] Current ratings based on 75° C conductor temperature, 25° C ambient temperature 0.5, 2 ft/sec wind in sun.

CONDUCTOR SIZE TABLES – AAC

Code Name	Size	Stranding Al/St	Complete Cable OD	Weight per 1000 ft	Ampacity[1]
	kcmil		(in)	(lb)	(amps)
Peachbell	6	7	0.184	25	103
Rose	4	7	0.232	39	138
Iris	2	7	0.292	62	185
Pansy	1	7	0.328	78	214
Poppy	1/0	7	0.368	99	247
Aster	2/0	7	0.414	125	286
Phlox	3/0	7	0.464	157	331
Oxlip	4/0	7	0.522	198	383
Sneezewort	250	7	0.567	234	425
Valerian	250	19	0.574	234	426
Daisy	266.8	7	0.586	250	443
Laurel	266.8	19	0.592	250	444
Peony	300	19	0.628	281	478
Tulip	336.4	19	0.665	315	513
Daffodil	350	19	0.679	328	526
Canna	397.5	19	0.723	373	570
Goldentuft	450	19	0.769	422	616
Cosmos	477	19	0.792	447	639
Syringa	477	37	0.795	447	639
Zinnia	500	19	0.811	469	658
Hyacinth	500	37	0.814	469	658
Dahlia	556.5	19	0.856	522	703
Mistletoe	556.5	37	0.858	522	704
Meadowsweet	600	37	0.891	562	738
Orchid	636	37	0.918	596	765
Heuchera	650	37	0.928	609	775
Verbena	700	37	0.963	656	812
Flag	700	61	0.964	656	812
Violet	715.5	37	0.973	671	823
Nasturtium	715.5	61	0.975	671	823
Petunia	750	37	0.997	703	847
Cattail	750	61	0.998	703	847
Arbutus	795	37	1.026	745	878
Lilac	795	61	1.027	745	879
Cockscomb	900	37	1.092	844	948
Snapdragon	900	61	1.093	844	948
Magnolia	954	37	1.124	894	982
Goldenrod	954	61	1.125	894	983
Hawkweed	1000	37	1.151	937	1,010
Camellia	1000	61	1.152	937	1,011
Bluebell	1033.5	37	1.170	969	1,031
Larkspur	1033.5	61	1.171	969	1,032
Marigold	113	61	1.216	1,043	1,079
Hawthorn	1192.5	61	1.258	1,118	1,124
Narcissus	1272	61	1.300	1,192	1,169
Columbine	1351.5	61	1.340	1,267	1,212
Carnation	1431	61	1.378	1,341	1,253

[1] Current ratings based on 75°C conductor temperature, 25°C ambient temperature, emissivity 0.5, 2 ft/sec wind in sun.

CONDUCTOR SIZE TABLES – AAC CONTINUED

Code Name	Size	Stranding Al/St	Complete Cable OD	Weight per 1000 ft	Ampacity*
	kcmil		(in)	(lb)	(amps)
Gladiolus	1510.5	61	1.416	1,416	1,294
Coreopsis	1590	61	1.453	1,490	1,333
Jessamine	1750	61	1.524	1,640	1,408
Cowslip	2000	91	1.631	1,875	1,518
Sagebrush	2250	91	1.730	2,130	1,612
Lupine	2500	91	1.823	2,366	1,706
Bitterroot	2750	91	1.912	2,603	1,793
Trillium	3000	127	1.998	2,839	1,874
Blubonnet	3500	127	2.158	3,345	2,024

* Current ratings based on 75°C conductor temperature, 25°C ambient temperature, emissivity 0.5, 2 ft/sec wind in sun.

NOMINAL PIPE SIZE (NPS) INFORMATION

Aluminum Schedule 40 Pipe (Standard)

Nominal Pipe Size	Diameter		Wall Thickness	Weight
	OD	ID		
in (mm)	in (mm)	in (mm)	in (mm)	lb/ft (g/mm)
1/8 (3)	0.405 (10.3)	0.269 (6.8)	0.068 (1.7)	0.085 (0.126)
1/4 (6)	0.540 (13.7)	0.364 (9.3)	0.088 (2.2)	0.147 (0.219)
3/8 (10)	0.675 (17.2)	0.493 (12.5)	0.091 (2.3)	0.196 (0.292)
1/2 (13)	0.840 (21.3)	0.622 (15.8)	0.109 (2.8)	0.294 (0.438)
3/4 (19)	1.050 (26.7)	0.824 (20.9)	0.113 (2.9)	0.391 (0.582)
1 (25)	1.315 (33.4)	1.049 (26.6)	0.133 (3.4)	0.581 (0.865)
1-1/4 (32)	1.660 (42.2)	1.380 (35.1)	0.140 (3.6)	0.786 (1.170)
1-1/2 (38)	1.900 (48.3)	1.610 (40.9)	0.145 (3.7)	0.940 (1.399)
2 (51)	2.375 (60.3)	2.067 (52.5)	0.154 (3.9)	1.260 (1.875)
2-1/2 (64)	2.875 (73.0)	2.469 (62.7)	0.203 (5.2)	2.000 (2.976)
3 (76)	3.500 (88.9)	3.068 (77.9)	0.216 (5.5)	2.620 (3.899)
3-1/2 (89)	4.000 (101.6)	3.548 (90.1)	0.226 (5.7)	3.150 (4.688)
4 (102)	4.500 (114.3)	4.026 (102.3)	0.237 (6.0)	3.730 (5.551)
5 (127)	5.563 (141.3)	5.047 (128.2)	0.258 (6.5)	5.060 (7.530)
6 (152)	6.625 (168.3)	6.065 (154.1)	0.280 (7.1)	6.560 (9.762)
8 (203)	8.625 (219.1)	7.981 (202.7)	0.322 (8.2)	9.880 (14.703)
10 (254)	10.750 (273.1)	10.020 (254.5)	0.365 (9.3)	14.000 (20.834)
12 (305)	12.750 (323.9)	12.000 (304.8)	0.375 (9.5)	17.140 (25.507)

Aluminum Schedule 80 Pipe (Extra Heavy)

Nominal Pipe Size	Diameter		Wall Thickness	Weight
	OD	ID		
in (mm)	in (mm)	in (mm)	in (mm)	lb/ft (g/mm)
1 (25)	1.315 (33.4)	0.957 (24.3)	0.179 (4.5)	0.751 (1.118)
1-1/4 (32)	1.660 (42.2)	1.278 (32.5)	0.191 (4.9)	1.037 (1.543)
1-1/2 (38)	1.900 (48.3)	1.500 (38.1)	0.200 (5.1)	1.256 (1.869)
2 (51)	2.375 (60.3)	1.939 (49.3)	0.218 (5.5)	1.737 (2.585)
2-1/2 (64)	2.875 (73.0)	2.323 (33.6)	0.276 (7.0)	2.650 (3.944)
3 (76)	3.500 (88.9)	2.900 (73.7)	0.300 (7.6)	3.547 (5.279)
3-1/2 (89)	4.000 (101.6)	3.364 (85.4)	0.318 (8.1)	4.326 (6.438)
4 (102)	4.500 (114.3)	3.826 (97.2)	0.337 (8.6)	5.183 (7.713)
5 (127)	5.563 (141.3)	4.813 (122.3)	0.375 (9.5)	7.188 (10.697)
6 (152)	6.625 (168.3)	5.761 (146.3)	0.432 (11.0)	9.980 (14.852)
8 (203)	8.625 (219.1)	7.625 (193.7)	0.500 (12.7)	15.16 (22.561)

NOMINAL PIPE SIZE (NPS) INFORMATION CONTINUED

Copper Schedule 40 Pipe (Standard)

Nominal Pipe Size	Diameter		Wall Thickness	Weight
	OD	ID		
in (mm)	in (mm)	in (mm)	in (mm)	lb/ft (g/mm)
1 (25)	1.315 (33.4)	1.062 (27.0)	0.127 (3.2)	1.83 (2.72)
1-1/4 (32)	1.660 (42.2)	1.368 (34.7)	0.146 (3.7)	2.68 (3.99)
1-1/2 (38)	1.900 (48.3)	1.600 (40.6)	0.150 (3.8)	3.19 (4.75)
2 (51)	2.375 (60.3)	2.062 (52.4)	0.157 (4.0)	4.21 (6.27)
2-1/2 (64)	2.875 (73.0)	2.500 (63.5)	0.188 (4.8)	6.12 (9.11)
3 (76)	3.500 (88.9)	3.062 (77.8)	0.219 (5.6)	8.72 (12.98)
3-1/2 (89)	4.000 (101.6)	3.500 (88.9)	0.250 (6.4)	11.38 (16.94)
4 (102)	4.500 (114.3)	4.000 (101.6)	0.250 (6.4)	12.90 (19.20)
4-1/2 (114)	5.000 (127.0)	4.500 (114.3)	0.250 (6.4)	14.42 (21.46)
5 (127)	5.563 (141.3)	5.063 (128.6)	0.250 (6.4)	16.12 (23.99)
6 (152)	6.625 (168.3)	6.125 (155.6)	0.250 (6.4)	19.35 (28.80)

Copper Schedule 80 Pipe (Extra Heavy)

Nominal Pipe Size	Diameter		Wall Thickness	Weight
	OD	ID		
in (mm)	in (mm)	in (mm)	in (mm)	lb/ft (g/mm)
1 (25)	1.315 (33.4)	0.951 (24.2)	0.182 (4.6)	2.51 (3.74)
1-1/4 (32)	1.660 (42.2)	1.272 (32.3)	0.194 (4.9)	3.46 (5.15)
1-1/2 (38)	1.900 (48.3)	1.494 (37.9)	0.203 (5.2)	4.19 (6.24)
2 (51)	2.375 (60.3)	1.933 (49.1)	0.221 (5.6)	5.79 (8.62)
2-1/2 (64)	2.875 (73.0)	2.315 (58.8)	0.280 (7.1)	8.84 (13.16)
3 (76)	3.500 (88.9)	2.892 (73.5)	0.304 (7.7)	11.82 (17.59)
3-1/2 (89)	4.000 (101.6)	3.358 (85.3)	0.321 (8.2)	14.37 (21.38)
4 (102)	4.500 (114.3)	3.818 (97.0)	0.341 (8.7)	17.25 (25.67)
5 (127)	5.563 (141.3)	4.813 (122.3)	0.375 (9.5)	23.67 (35.22)
6 (152)	6.625 (168.3)	5.751 (146.1)	0.437 (11.1)	32.93 (49.01)
8 (203)	8.625 (219.1)	7.625 (193.7)	0.500 (12.7)	49.42 (73.55)

TORQUE TABLES

Recommended Torque Settings for Imperial Hex Bolt Fasteners

Material	lb-ft						
	1/4 in	5/16 in	3/8 in	7/16 in	1/2 in	5/8 in	3/4 in
Aluminum	–	–	14	20	25	40	54
Galvanized Steel Stainless Steel Silicon Bronze	7	15	20	30	40	55	87

Recommended Torque Settings for Metric Hex Bolt Fasteners

Material	Nm						
	M8	M10	M12	M14	M16	M18	M20
Aluminum	–	30	50	60	75	90	100
Galvanized Steel Stainless Steel Silicon Bronze	25	49	85	135	210	300	425

INDEX

Family Name	Page
A	
AAZ	19
AT/ATT	62
AZ	18
C	
C2Z	24
C3Z	25
CB	64
CCDT	76
CCDTN4	77
CCZ	22
CE	44
CT	63
CZ	20
E	
EGP-A	81
EHHE-A	42
ERC	43
ES-A	105
F	
FE	114
FE-A	109
FES-A	110
FP	115
FP-A	111
FSD-A	97
FZ	116
FZ-A	112
H	
H2ZR-A	17
HATT	68
HB	65
HB-A	51
HBR	67
HBR-A	53
HE	45
HE-A	37
HHE-A	40, 41
HHT-A	59
HHTR-A	54, 57
HL-A	38, 39
HP	90
HP-A	85
HPR	92
HPR-A	87
HT	70, 71, 72, 73, 74, 75
HZ	27
HZ-A	13
HZR	28
HZR-A	15

Family Name	Page
L	
LZ	26
M	
MP-R	82
S	
SD	101
SF	100
SHG	99
T	
TA	122
TA-A	121
TC	125
TD	126
TDH	127
TDV	128
TE	129
TG	130
TR	131
TSE	132
TT	133
X	
XZF-R	30
Z	
ZTC	32

CUSTOMER SUPPORT

U.S. SUPPORT

Tel: 440.461.5200

Fax: 440.442.8816

Email: info@plp.com

INTERNATIONAL SUPPORT

Tel: 440.473.9294

Fax: 440.461.2918

Email: international@plp.com

INSTALLATION INSTRUCTIONS

Substation Connectors - SP3685

GLOBAL HEADQUARTERS
660 BETA DRIVE
CLEVELAND, OHIO 44143

+1 440 461 5200
INFO@PLP.COM
PLP.COM

© 2023 Preformed Line Products
Printed in U.S.A.
EN-CA-1028
08.23.1.5C