Wellbore Integrity SOLUTIONS | DRILCO®

TUBULARS AND TUBULAR SERVICES

Catalog

TABLE OF CONTENTS

Interactive Navigation: *Click any line in the Table of Contents (TOC) to go directly to that page. To navigate back to the Table of Contents, click anywhere in the footer section at the bottom of each page or on the TOC icon in the footer.*

Drilco Tubulars

Drill Collars — Standard and Spiral 2

Hevi-Wate® Transition Drill Pipe — Standard and Spiral 4

Kelly, Rotary Drive — Hex and Square 6

Mud-Chek AP Mud-Saver Valve 7

Premium Connections — SSDS 8

Premium Connections — ATDS 10

Thread Protectors — Pressed Steel and Cast Steel 11

Rotary Substitutes (Subs) 13

Rig Equipment

EZY-TORQ® Hydraulic Cathead 17

Tru-Torque Automatic Torque Control System (ATCS) 19

Rig Floor and Drilling Packages 21

Tubular Services

Machine Shop Services 25

Inspection Services 28

Mobile Hardbanding Services 29

Tubular Management Services 31

DRILCO PRODUCTS AND SERVICES

Superior Tubular Solutions

Wellbore Integrity Solutions' DRILCO product line has a long heritage of providing industry leading tubular products and services to the drilling industry.

The DRILCO brand has been synonymous with excellence and innovation in tubular products and services. From the invention of Hevi-Wate* transition drillpipe, to the first use of continuous-line heat treating for drill collars, to the pioneering of field inspection services and mobile field hardbanding units, DRILCO has been an industry leader. The "OK DRILCO" stencil is recognized as a symbol of quality throughout the oilfield.

DRILCO's manufactured products include drill collars, Hevi-Wate® transitional drill pipe, kellys, rotary substitutes (subs), accessories, and other BHA tools. Surface equipment such as the Ezy-Torq® hydraulic cathead, AccuTorque™ automatic torque control system, Mud-Chek AP™ mud saver valve, and other equipment is available to assist the drilling crew in the proper operation and use of the BHA and drill string components. DRILCO also specializes in the full suite of tubular management services such as field inspection, machine shop, and field hardbanding to provide expert maintenance for essential drill string components and equipment.

Setting the Industry Standard with Technical Training

At DRILCO technical training is a requirement, not an afterthought. Considered by many to be the best in the industry, our DRILCO personnel undergo extensive training and qualification programs to meet or exceed industry requirements. The classroom technical training programs are in accordance with API, ISO, ASNT SNT-TC-1A, and other customer-specific requirements.

Global Reach

DRILCO has the worldwide infrastructure to support your operations no matter where you drill. With inspection and machine shop facilities strategically located around the globe, fast and dependable response is available 24/7.

Call your DRILCO representative today for superior tubular products and services you can trust.

wellboreintegrity.com/DRILCO

DRILCO offers a full line of premium drill pipe available in a variety of sizes with API and non-standard wall thickness to deliver optimal torque, weight, and durability. Our team can help you select the best features to ensure maximum BHA performance.

DRILCO TUBULARS

Drill Collars — Standard and Spiral

The DRILCO drill collar is not only the most common member in the BHA, it is also the most essential to its overall performance. The care taken in materials specification, heat treat, machining, and inspection are only a few of the reasons DRILCO drill collars out perform all others. By helping operators select the optimum connections and the right optional features, DRILCO combines the right product with the best advice for trouble-free BHA performance.

Features

- Materials can be specified for conformance to standard industry requirements such as API Specification 7–1, as well as NS–1, and individual customer specifications.
- Rolled, milled or machined surface finishes are available.
- The critical threaded section has a hardness range of 285 to 341 BHN and a Charpy impact value of 40 ft.lbf at room temperature guaranteed 1-in. below the surface.
- New drill collar connections are manufactured to the specifications contained in the API Specification 7–1.
- Connections are phosphate-coated to protect them from the elements after machining and to help prevent galling upon initial makeup.
- Thread roots are cold rolled on API and H-90 connections; (excluding the 2⅜-, 2⅞-in. Reg and Slim-Line H-90.) Cold rolling compresses the fibers in the thread root making this area of the connection more fatigue-resistant.
- Pressed steel thread protectors are supplied for all drill collars that are equipped with standard connections.
- All drill collars undergo rigorous quality assurance checks during manufacturing, including ultrasonic testing of drill collar bars after heat-treating.

Optional Features

- Slip and elevator recesses reduce drill collar handling time by eliminating lift subs and safety clamps. Extreme care is taken to machine smooth radii free of tool marks. Cold rolling the radii at the upper shoulder of each recess extends the fatigue life of the drill collar. Slip and elevator recesses may be provided together or separately.
- An API stress-relief groove on the pin and an API bore back box are available on request, and are recommended for drill collars and all downhole tools where fatigue can occur as a result of bending. These features remove unengaged threads in the highly stressed areas of the drill collar connection so that bending occurs in the connection in areas with smooth surfaces free of stress concentrations. Consequently, the connection is less likely to crack because of fatigue. ***Note: Stress relief features are not commonly utilized for connections on sizes NC 38 and smaller.***
- Spiral drill collars reduce the area of contact between the drill collar and the borehole wall. This feature is advantageous where differential sticking is a problem.
- Drill collar hardbanding is the most effective means of reducing the wear of the collar OD that occurs during normal openhole drilling. Standard hardbanding material consists of granular tungsten carbide that is added to the molten weld puddle to obtain uniform distribution of the tungsten carbide particles. The resulting deposit is flush to 1/32 in. beyond the collar OD. Hardbanding should not be applied to the box end unless the drill collar has been equipped with a slip recess because hardbanding will cover the normal slip area. ***Note: The 4¾-in. OD drill collar is the smallest diameter that can be hardbanded.***

Applications

- Drilling weight is the primary application of drill collars. The buoyed weight of a typical drill collar string is approximately 15% more than the maximum WOB required for optimum bit performance, ensuring that enough drill collars are run in compression to maintain the neutral point within the drill collar string.
- Proper drill collar sizing results in improved borehole integrity, enabling the desired casing size to be run to bottom. The drill collar limits the lateral movement of the drill bit in the absence of larger diameter drilling tools.
- Drill collar stiffness is important for drilling and maintaining a straight wellbore. The first 90 ft of BHA above the bit have the greatest impact on hole straightness and drill collar stiffness should be optimized in this section. Please refer to the "DRILCO Drilling Assembly Handbook" for more information.

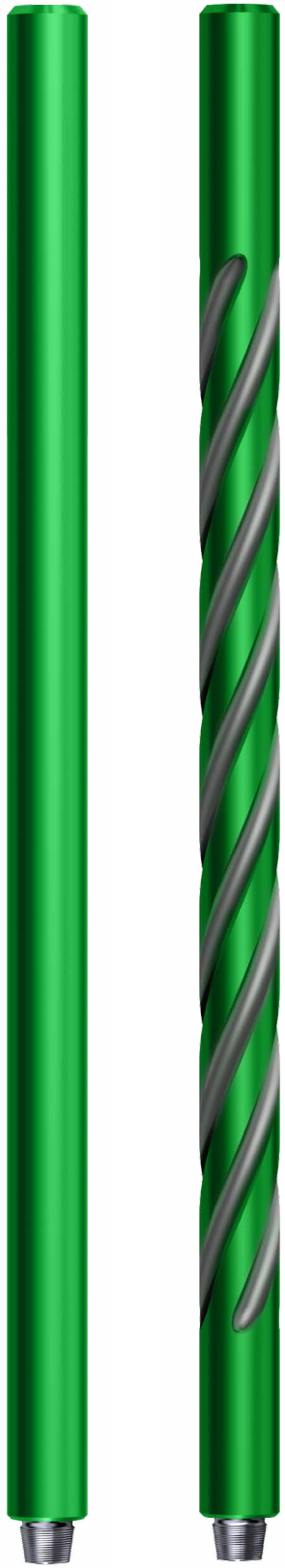

Standard drill collar, left, and spiraled drill collar, right

Drill Collars — Standard and Spiral

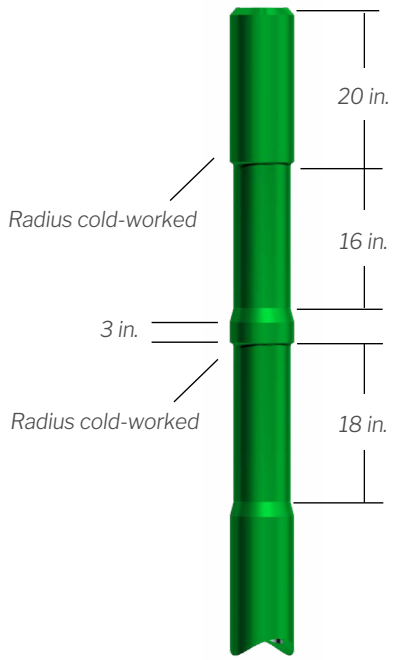

Slip and elevator recess option. ***Note:*** *Slip and elevator recesses may be used together or separately.*

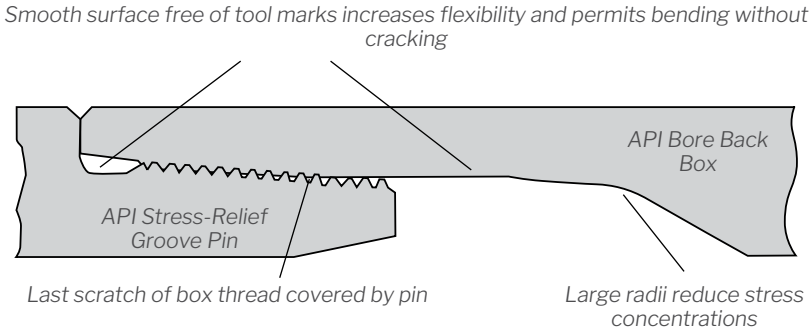

Stress-relief option.

DRILL COLLAR SPECIFICATIONS

Drill collar connection size and type, in.	Minimum OD, in.	Bore, in.	Length, ft	Bending strength ratio†	Drill collar weight, lbm
NC 26 (2⅜ IF)	3½	1½	30	2.42:1	801
NC 31 (2⅞ IF)	4⅛	2	30	2.43:1	1,041
NC 38 (3½ IF)	4¾	2¼	31	1.85:1	1,451
NC 38 (3½ IF)	5	2¼	31	2.38:1	1,652
NC 44	6	2¼	31	2.49:1	2,561
NC 44	6	2 13/16	31	2.84:1	2,353
NC 44	6¼	2¼	31	2.91:1	2,806
NC 46 (4 IF)	6¼	2 13/16	31	2.63:1	2,598
NC 46 (4 IF)	6½	2¼	31	2.76:1	3,085
NC 46 (4 IF)	6½	2 13/16	31	3.05:1	2,877
NC 46 (4 IF)	6¾	2¼	31	3.18:1	3,364
NC 50 (4½ IF)	7	2¼	31	2.54:1	3,643
NC 50 (4½ IF)	7	2 13/16	31	2.73:1	3,434
NC 50 (4½ IF)	7¼	2 13/16	31	3.12:1	3,714
NC 56	8	2 13/16	31	3.02:1	4,675
6⅝ Reg	8	2 13/16	31	2.60:1	4,675
6⅝ Reg	8¼	2 13/16	31	2.93:1	5,016
7⅝ Reg	9½	3	31	2.81:1	6,727
7⅝ Reg‡	9¾	3	31	3.09:1	7,130
8⅝ Reg‡	11	3	30	2.78:1	8,970

† Ratio of box-to-pin section modulus. See API RP7G for explanation.
‡ Low torque face
Notes: Other sizes and connections are available. Optional features available upon request. The 4¾-in. OD drill collar is the smallest diameter that can be hardbanded. The weight of a round drill collar will be reduced by approximately four percent by spiral conversion.

Ordering instructions, please specify:

- *Drill collar OD*
- *Drill collar bore ID*
- *Length of drill collar*
- *Size, type and location of connections (e.g. NC 50 box up × NC 50 pin down)*
- *Cast or pressed steel thread protectors*
- *Hardbanding — refer to the hardbanding section in this catalog for available options*

Hevi-Wate® Transition Drill Pipe — Standard and Spiral

DRILCO Hevi-Wate transition drill pipe is the industry standard for an intermediate-weight drill stem member and is available in standard, spiral, and nonmagnetic designs, making it useful in a number of applications. It is designed and built with drill pipe dimensions for easier handling by the rig crew, and uses a unique center upset wear pad or spiral to increase tube life while reducing hole drag and differential sticking problems.

Features

- Materials can be specified for conformance to standard industry requirements, such as NS–1 and individual customer specifications.
- Long tool joints provide ample space to recut connections, reduce OD wear rate, and extend service life.
- A unique center upset or wear pad protects the tube from OD wear and increases tube life by keeping it away from the borehole wall while reducing hole drag and the risk of differential sticking.
- The API bore back box is standard for the box connection on 4 inch Hevi-Wate drill pipe and larger, helping to extend the service life of connections.
- Cold rolling the thread roots on all Hevi-Wate drill pipe connections increases the connection's ability to resist fatigue cracking.
- Hevi-Wate drill pipe can be picked up with the drill pipe elevators for fast, efficient handling on the rig floor.

Optional Features

- Hardbanding placed on the tool joints and center wear pad will increase abrasion resistance and extend service life.
- An API stress-relief groove can be placed on the pin connections for 4 inch joints and larger.

Applications

Directional Drilling

- Hevi-Wate drill pipe can serve as an effective weight-on-bit member in extended-reach, horizontal, and conventional directional wells.
- It improves directional control because of reduced torque and drag.
- The center upset also helps reduce the risk of differential sticking.

Vertical Drilling

- When drilling vertical wells, Hevi-Wate drill pipe can serve as an active weight-on-bit member in place of a portion of the drill collar string to reduce torque and shorten trip time.
- It can provide a portion of the anticipated drilling weight when using soft-formation PDC bits.

Note: Hevi-Wate drill pipe should not be used to provide weight-on-bit in vertical holes larger than those listed in the accompanying table.

Transition Zone

- By running 18 to 21 joints of Hevi-Wate drill pipe above drill collars, the risk of drill pipe fatigue failure is reduced.

Tapered Drill Strings

- Hevi-Wate drill pipe is recommended for use in the crossover area of a drill string when the bending strength ratio (ratio of I/C or section modulus) between the drill collars and the drill pipe exceeds 5.5. It will provide a gradual transition in stiffness between the drill collars and drill pipe, reducing fatigue damage to the drill pipe. Refer to the table "Bending Strength Ratios" to find the maximum drill collar size that can be run directly below Hevi-Wate drill pipe, and to the "DRILCO Drilling Assembly Handbook" for additional information.

Remedial Operations

- Hevi-Wate drill pipe provides the weight required in milling, underreaming, and hole-opening operations.

Jar Placement

- It is well suited for jar placement. Use a sufficient number of joints below the jar to ensure that the jar is not in the transition zone, and 20% of the recommended jar overpull as hammer weight above the jar in areas where differential sticking is a problem. Consult a DRILCO representative for additional information and placement recommendations.

Hydraulic Improvements

- Hevi-Wate drill pipe can reduce drill string pressure losses when it replaces part of the drill collar string in hole sizes ranging from 6 to 8¾ in., where drill collar bore size is relatively small.

Standard Hardbanding

A variety of abrasion-resistant materials are available for application. Contact a DRILCO representative for more information. Standard hardbanding consists of several applications:

- Pin–5 in. of hardmetal applied flush with the OD at the pin end.
- Box–4 in. of hardmetal applied flush with the OD on the box end. ***Optional: 1 in. on the taper at the box end in addition to the 4 in. on the OD.***
- Center upset–two 3 in. bands applied to each end at upset OD.

See the Machine Shop Services section of this catalog for details.

Nonmagnetic Hevi-Wate Transition Drill Pipe

Nonmagnetic Hevi-Wate transition drill pipe enables MWD tools to be isolated from the undesirable effects of drill string magnetic interference. This intermediate-weight drill string member is manufactured with stringent material specifications to ensure the low magnetic permeability required for nonmagnetic downhole drilling tools. It has corresponding drill pipe dimensions and can be picked up with the drill pipe elevators for fast, efficient handling on the rig floor. Nonmagnetic Hevi-Wate drill pipe is a special-order product to meet specific requirements. Please consult your local DRILCO representative for further details.

Hevi-Wate® Transition Drill Pipe — Standard and Spiral

HEVI-WATE TRANSITION DRILL PIPE SPECIFICATIONS–STANDARD AND SPIRAL

Nominal Size, in.	Tube					Mechanical Properties Tube Section		Tool joint			
	Nominal Tube Dimensions			Center Upset OD, in.	Elevator Upset OD, in.	Tensile Yield, lbm	Torsional Yield, ft.lbm	Connection Size and Type	OD,in.	ID, in.	Tensile Yield, lbm
	ID, in.	Wall Thickness, in.	Area, in.^{2}								
3½	2¼	0.625	5.645	4	3⅝	738,647	19,174	NC 38 (3½ IF)	4¾	2⅜	800,201
4	2 9/16	0.719	7.410	4½	4⅛	780,201	25,664	NC 40 (4 FH)	5¼	2 11/16	841,107
4½	2¾	0.875	9.965	5	4⅝	1,120,317	41,837	NC 46 (4 IF)	6¼	2⅞	1,210,776
5	3	1.000	12.566	5½	5⅛	1,380,225	55,984	NC 50 (4½ IF)	6⅝	3 1/16	1,459,869
5½	3⅜	1.063	14.812	6	5⅝	1,619,231	62,903	5½ FH	7	3½	1,754,167
6⅝	4½	1.063	18.567	7⅛	6¾	1,788,591	87,856	6⅝ FH	8	4⅝	1,937,641

HEVI-WATE TRANSITION DRILL PIPE SPECIFICATIONS–STANDARD AND SPIRAL *cont.*

Nominal Size, in.	Tool Joint			Approximate Overall Length, ft
	Torsional Yield, ft.lbm	Makeup Torque, ft. lbm	Approximate Overall Length of Pin/Box, in.	
3½	20,772	10,000	33/30	31
4	27,659	13,300	33/30	31
4½	60,541	21,800	33/30	31
5	60,677	29,200	33/30	31
5½	68,145	32,800	33/30	31
6⅝	95,178	45,800	30/30	31

HEVI-WATE TRANSITION DRILL PIPE BENDING STRENGTH RATIOS

Hevi-Wate Transition Drill Pipe Size, in.	Maximum Drill Collar Size†, in.	Bending Strength Ratios
3½	5¾ × 2¼	18.2/3.5 = 5.2:1
4	6½ × 2¼	26.5/5.2 = 5.1:1
4½	7½ × 2 13/16	36.5/7.7 = 4.7:1
5	8¼ × 2 13/16	54.3/10.7 = 5.1:1
5½	9 × 2 13/16	70.8/14 = 5.1:1
6⅝	10½ × 3	113/22.4 = 5.0:1

† Indicates the largest size drill collar to be run directly below the Hevi-Wate transition drill pipe. If drill collars larger than the maximum size shown are to be used, run at least three collars of the maximum size shown between the large drill collar and the Hevi-Wate transition drill pipe.

HEVI-WATE TRANSITION DRILL PIPE WEIGHT AND CENTER UPSET SPECIFICATIONS

Nominal Size, in.	Spiral Hevi-Wate Transition Drill Pipe			Standard Hevi-Wate Transition Drill Pipe		
	Approximate Weight, Including Tube and Joints, lbm		Center Upset Length, ft	Approximate Weight, Including Tube and Joints, lbm		Center Upset Length, in.
	lbm.ft	lbm.Jt 31 ft		lbm.ft	lbm.Jt 31 ft	
3½	27.5	873	18.5	23.4	753	26
4	34.3	1,281	18.5	29.9	991	26
4½	46.5	1,380	18.5	41.1	1,232	26
5	55.4	1,843	18.5	50.1	1,707	26
5½	63.8	2,094	18.5	57.6	1,945	26
6⅝	77.7	2,118	18.5	71.3	2,418	26

HEVI-WATE TRANSITION DRILL PIPE VS. MAXIMUM HOLE SIZE

Hevi-Wate Transition Drill Pipe Size, in.	Maximum Hole Size, in.
3½	7
4	8⅛
4½	9 1/16
5	10 1/16
5½	11
6⅝	13½

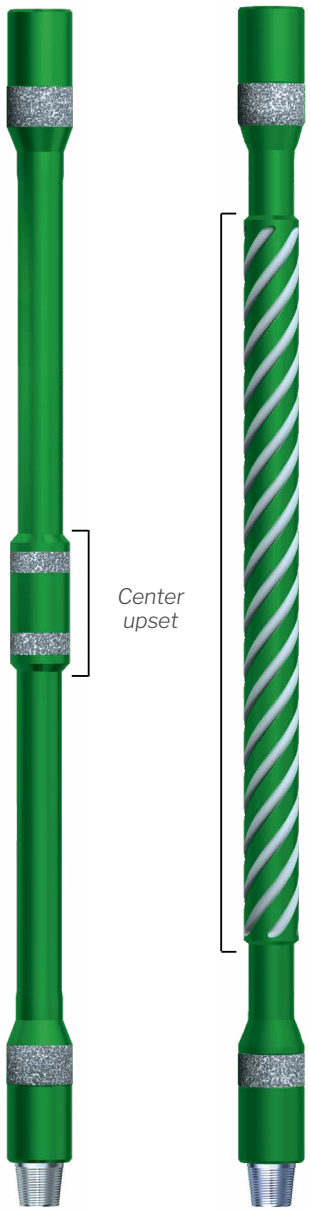

Standard Hevi-Wate transition drill pipe, left, and spiraled Hevi-Wate transition drill pipe, right*

Kelly, Rotary Drive — Hex and Square

Rotary kellys transmit torsional energy from the rotary table to the drill string and ultimately to the bottom of the hole. The mechanical properties of the steel and the specifications used by DRILCO to manufacture kellys protect and extend this capability.

Each DRILCO rotary kelly is heat-treated along its entire length for uniform toughness and durability. A hardness range of 285 to 341 BHN and a Charpy V-notch impact value of 40 ft.lbf are guaranteed one inch below the surface at room temperature. Each rotary kelly conforms to the mechanical properties listed in API Specification 7–1 and can be stamped with the API monogram.

Machined flats and upsets ensure tight tolerances and a high-quality drive section. These features retard wear on the kelly and prolong the service life of its drive-bushing rollers.

Kellys can have a square or hexagonal cross section and are available in two standard lengths:

- 40 ft [12.2 m] with a 37 ft [11.3 m] working space
- 46 ft [14.0 m] with a 43 ft [13.1 m] working space

Other sizes may be available through special order.

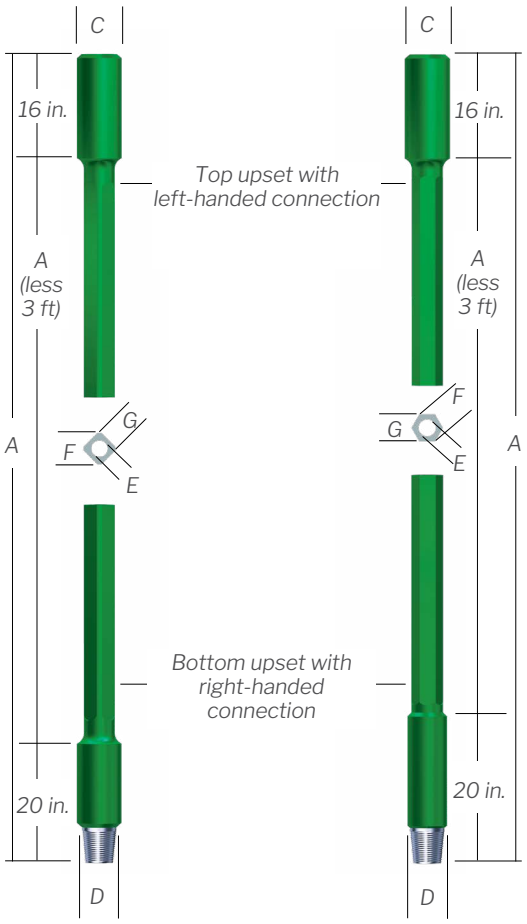

Square kelly, left, and hexagonal kelly, right.

HEXAGONAL KELLY SPECIFICATIONS

Nominal Size, in.	Available Lengths, ft (A)	Top Upset		Bottom Upset		Bore, in. (E)	Drive Section		Weight of 40 ft Length, lbm
		API Box Lefthand Connection	OD, in. (C)	Righthand Connection	OD, in. (D)		Across Corners, in. (F)	Across Flats, in. (G)	
3.5	40, 46	6⅝ Reg	7¾	NC 31 (2⅞ IF)	4⅛	2†	3.937	3½	1,300
3.5	40, 46	4½ Reg	5¾	NC 31 (2⅞ IF)	4⅛	2†	3.937	3½	1,200
4.25	40, 46	6⅝ Reg	7¾	NC 38 (3½ IF)	4¾	2¼	4.781	4¼	1,740
5.25	40, 46	6⅝ Reg	7¾	NC 46 (4 IF)	6–6⅜	2 13/16	5.900	5¼	2,550
5.25	40, 46	6⅝ Reg	7¾	NC 50 (4½ IF)	6⅛–6⅜	3	5.900	5¼	2,550

† *Not an API standard*

SQUARE KELLY SPECIFICATIONS

Nominal Size, in.	Available Lengths, ft (A)	Top Upset		Bottom Upset		Bore, in. (E)	Drive Section		Weight of 40 ft Length, lbm
		API Box Lefthand Connection	OD, in. (C)	Righthand Connection	OD, in. (D)		Across Corners, in. (F)	Across Flats, in. (G)	
3	40, 46	6⅝ Reg	7¾	NC 31 (2⅞ IF)	4⅛	2†	3.875	3	1,080
3	40, 46	4½ Reg	5¾	NC 31 (2⅞ IF)	4⅛	2†	3.875	3	980
3.5	40, 46	6⅝ Reg	7¾	NC 38 (3½ IF)	4¾	2¼	4.437	3½	1,320
3.5	40, 46	4½ Reg	5¾	NC 38 (3½ IF)	4¾	2¼	4.437	3½	1,320
4.25	40, 46	6⅝ Reg	7¾	NC 46 (4 IF)	6–6⅜	2 13/16	5.500	4¼	1,820
4.25	40, 46	6⅝ Reg	7¾	NC 50 (4½ IF)	6⅛–6⅜	2 13/16	5.500	4¼	1,820

† *Not an API standard*

Mud-Chek AP Mud-Saver Valve

The DRILCO Mud-Chek AP* kelly mud-saver valve reduces or eliminates the undesirable loss of fluid when making a connection while drilling. Placed on the end of the kelly, it opens as a result of pressure when the rig pumps are engaged, enabling circulation down the drill string. When circulation is stopped the valve closes immediately, trapping the drilling fluid inside the kelly, making drill string trips drier, faster, and safer for the rig crew and the environment. No manual intervention is required.

Benefits

- Reduces waste by eliminating mud loss during connections
- Eliminates rig time lost waiting on kelly to drain
- Reduces risk of accidents by helping to keep rig floor dry
- Saves rig time by improving crew efficiency when racking back tubulars
- Helps protect rig crew from contact with hazardous drilling fluids
- Helps control contamination of rigsite by drilling fluid
- Lowers costs by doubling as a kelly saver sub, extending life of the kelly
- Reduces rigsite cleanup costs

Able to Withstand Extreme Drilling Conditions

- 850 galUS/min mud flow rate
- 4,500 psi drill string pressure
- 18 lbm/galUS mud density
- 30% solids content

Superior Durability and Reliability

- The geometry is optimized using fluid flow analysis to reduce erosion in critical areas.
- A solid tungsten carbide seat reduces wear and improves reliability.
- The rugged design extends tool life, eliminating the need to make and break connections to replace the mud-saver valve during a job.
- A backflow feature permits pressure equalization in the kelly, allowing normal drill pipe readings at the standpipe. The compact, easy-to-use valve measures 36 inches shoulder to shoulder.

Reduced Risk for Wireline Operations

With the Mud-Chek AP valve, there is no need to use an overshot and deal with the complexities of shearing pins and retrieving a spear assembly. An easy to use sinker bar breaks a plastic cap for wireline operations through the valve.

Low Crack Pressure and Pressure Drop

Valve cracks open at 150 psi, allowing the kelly to hold at least 100 ft of 18 lbm/galUS mud. Maximum pressure drop through the valve is 100 psi.

Increased Safety for Higher Productivity

- Eliminates mud loss during connections
- Eliminates rig time spent waiting for the kelly to drain
- Dry rig floor reduces the risk of rig crew slipping
- Improves crew efficiency when racking back tubulars

MUD-CHEK AP MUD SAVER VALVE SPECIFICATIONS				
	4¾ in.	**5¼ in.**	**6½ in.**	**7¼ in.**
Minimum flow area in open position, in.^{2}	4.75	4.75	3.98	3.98
Length (shoulder to shoulder), no protector, in.	34	34	36	36
Length (shoulder to shoulder), protector, in.	N/A	N/A	40	40
Connections (API)	NC 38, 3½ IF	NC 40	NC 46, 4 IF, NC 50, 4½ IF	5.5 FH
Tool Sub OD, in.	4¾	5¼	6½	7¼
Tool Sub ID, in.	2¼	2¼	2 13/16	3
Tool sub weight (no rubber protector groove), lbm	105	140	212	290
Valve weight, lbm	18	18	36	36
Valve crack pressure, psi	200	200	150	150
Maximum pressure drop (after valve opens), psi	100	100	100	100
Max Operating Limits				
Flow rate, galUS/min	400	400	850	850
Drill string pressure, psi	4,500	4,500	4,500	4,500
Mud density, lbm/galUS	18	18	18	18
Solids content, %	30	30	30	30
Sinker bar for wireline, in.	1 11/16	1 11/16	1¾	1¾
Sinker bar length for wireline, ft	8	8	3	3
Impact strength of knock out cap, ft.lbf	875	875	144	144
Clear opening with knock out cap ruptured by sinker bar, in.	1¾	1¾	2	2

Mud-Chek AP advanced performance mud-saver valve in closed position, left, and open position, right.

Premium Connections — SSDS

DRILCO offers two premium connections with superior torque capacity. Rig handling procedures and makeup speed are similar to a standard API connection.

SSDS Premium High-Torque Connection

The DRILCO SSDS* high-torque connection improves drilling performance by providing 30% to 40% greater torque capacity than standard API connections, making it ideal for aggressive drilling programs. Improved flow rates can be obtained by using a larger than standard bore in the tool joint. The SSDS connections have a greater resistance to tool joint wear, which reduces costs by extending service life.

The connection's double-shoulder design incorporates a primary external shoulder that serves as the connection sealing surface and a secondary internal shoulder that serves as a mechanical stop and friction surface to provide additional resistance to torque. The design uses the same thread form and taper as an equivalent size API connection. An extended profile helps to balance contact forces between the two shoulders, providing additional torsional strength for high-torque applications.

Consult your DRILCO representative for guidance on connection interchangeability.

Applications

- Drilling torque exceeds the limits of standard API connections
- Tool joint ID needs to be larger, for reduced pressure loss and improved hydraulic efficiency
- Tool joint and connection sizes need to be smaller than standard API without compromising torsional strength or hydraulics

Benefits

- Improves drilling performance in aggressive drilling programs
- Increases hydraulic efficiency by accommodating a larger ID tool joint
- Greater resistance to tool joint wear extends drill pipe service life

Features

- Torsional strength 30% to 40% greater than equivalent API connection
- Optional tool joint ID larger than standard ID
- Double-shoulder design improves torsional and hydraulic performance
- Rig handling procedures and makeup speed similar to API connections.

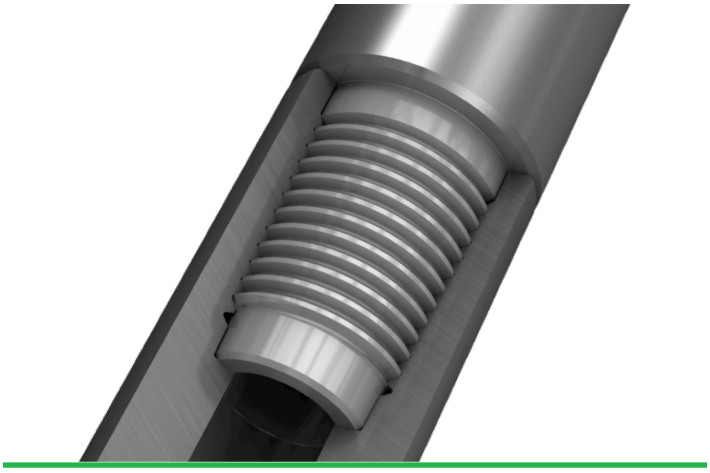

The SSDS provides 30% to 40% greater torque capacity than standard API connections.

Premium Connections — SSDS

SSDS38 CONNECTION SPECIFICATIONS				
Tool Joint		Makeup Torque, ft.lbf	Torsional Yield, ft.lb	Pin Tensile Yield, lb
OD, in.	ID, in.			
4¾	2 7/16	18,066	30,110	708,063
	2 9/16	17,170	28,617	649,158
	2 11/16	15,543	25,905	587,308
4⅞	2 7/16	19,795	32,992	708,063
	2 9/16	17,726	29,543	649,158
	2 11/16	15,543	25,905	587,308
5	2 7/16	19,795	32,992	708,063
	2 9/16	17,726	29,543	649,158
	2 11/16	15,543	25,905	587,308

SSDS40 CONNECTION SPECIFICATIONS				
Tool Joint		Makeup Torque, ft.lbf	Torsional Yield, ft.lb	Pin Tensile Yield, lb
OD, in.	ID, in.			
5¼	2 9/16	23,108	38,513	819,050
	2 11/16	20,821	34,702	757,200
	2 13/16	18,415	30,692	692,405
5⅜	2 9/16	23,108	38,513	819,050
	2 11/16	20,821	34,702	757,200
	2 13/16	18,415	30,692	692,405
5½	2 9/16	23,108	38,513	819,050
	2 11/16	20,821	34,702	757,200
	2 13/16	18,415	30,692	692,405

SSDS46 CONNECTION SPECIFICATIONS				
Tool Joint		Makeup Torque, ft.lbf	Torsional Yield, ft.lb	Pin Tensile Yield, lb
OD, in.	ID, in.			
6	3	34,382	57,303	1,048,427
	3⅛	31,370	52,284	976,268
	3¼	28,224	47,040	901,164
6⅛	3	34,382	57,303	1,048,427
	3⅛	31,370	52,284	976,268
	3¼	28,224	47,040	901,164
6¼	3	34,382	57,303	1,048,427
	3⅛	31,370	52,284	976,268
	3¼	28,224	47,040	901,164

SSDS50 CONNECTION SPECIFICATIONS				
Tool Joint		Makeup Torque, ft.lbf	Torsional Yield, ft.lb	Pin Tensile Yield, lb
OD, in.	ID, in.			
6⅜	3¼	46,427	77,378	1,268,963
	3½	39,245	65,409	1,109,920
	3¾	31,480	52,467	939,096
6½	3¼	46,427	77,378	1,268,963
	3½	39,245	65,409	1,109,920
	3¾	31,480	52,467	939,096
6⅝	3¼	46,427	77,378	1,268,963
	3½	39,245	65,409	1,109,920
	3¾	31,480	52,467	939,096

SSDS55 CONNECTION SPECIFICATIONS				
Tool Joint		Makeup Torque, ft.lbf	Torsional Yield, ft.lb	Pin Tensile Yield, lb
OD, in.	ID, in.			
7	3¾	54,522	90,870	1,448,407
	3⅞	50,823	84,705	1,358,577
	4	46,199	76,998	1,265,801
7⅛	3¾	55,287	92,145	1,448,407
	3⅞	50,823	84,705	1,358,577
	4	46,199	76,998	1,265,801
7¼	3¾	55,287	92,145	1,448,407
	3⅞	50,823	84,705	1,358,577
	4	46,199	76,998	1,265,801

† *Tables contain connection data for common tool joint sizes. Contact DRILCO for data on sizes not listed.*

‡ *Performance properties based on 120,000 psi yield strength tool joint material, and thread compound with 1.0 API friction factor. Torsional yield values shown in bold type indicate the connection is box weak in torsion. Makeup torque is based on 72,000 psi stress level.*

Premium Connections — ATDS

ATDS Advanced-Torque Double-Shouldered Connection

The DRILCO ATDS* advanced-torque double-shouldered connection substantially increases drilling performance with small-diameter tubulars by providing a torque capacity that is 50% to 55% greater than standard API connections for comparable size tubulars.

Designed for small diameter tubulars, the superior torsional strength makes ATDS connection ideal for aggressive drilling programs and fishing operations. Improved flow rates can be obtained by using a larger than standard bore in the tool joint.

The double-shouldered design enables the primary external shoulder to serve as the sealing surface, while the secondary shoulder serves as a mechanical stop for the connection. The ATDS pin and box sections are engineered to distribute the makeup forces between the two shoulders, providing additional torsional strength for high-torque applications.

Repairs to the ATDS connections must be performed by licensed machine shops with CNC machine capabilities. DRILCO machine shop repair facilities are conveniently located in a number of oilfield service centers around the world for repair services.

Applications

- Drilling torque exceeds the limits of standard API connection
- Tool joint and connection size needs to be smaller than standard API without compromising torsional strength or hydraulics

Benefits

- Improves drilling performance in aggressive drilling programs
- Increases hydraulic efficiency by accommodating larger ID tool joint
- Greater resistance to tool joint wear extends drill pipe service life

Features

- Torsional strength approximately 50% to 55% greater than equivalent API connection
- Double-shoulder design improves torsional and hydraulic performance
- Rig handling procedures and makeup speed similar to API connection

ATDS CONNECTION SPECIFICATIONS

Connection Size and Style	Tool Joint		Makeup Torque, ft.lb	Torsional Yield, ft.lb	Pin Tensile Yield, lb
	Box OD, in.	Pin ID, in.			
ATDS 24 PAC	3⅛	1½	5,420	9,035	273,000
ATDS 26	3⅜	1½	7,520	12,530	360,400
	3½	1½	7,590	12,650	360,400

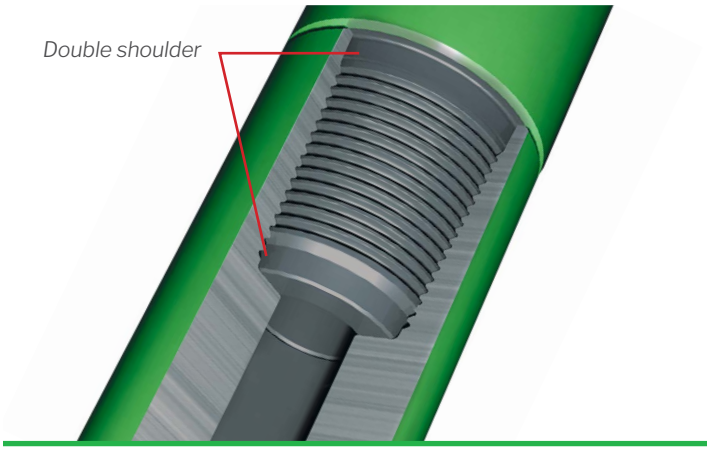

The double shoulder of the ATDS connection provides greater torque capacity than standard API connections.

Thread Protectors — Pressed Steel and Cast Steel

Thread protectors are recommended to protect the pin and box connections when drill string components are being shipped or stored at the warehouse or wellsite.

Three Types of Thread Protectors Are Available

- Cast-steel thread protectors, with lifting bail, are made from steel castings that meet ASTM specification A 27 Grade 60–30 (60,000 psi tensile–30,000 psi yield). They are equipped with heavy-duty bails to enable drill collars to be picked up and set down with a catline. Cast-steel thread protector's threads and shoulders are precision machined.
- Pressed steel, light-duty protectors are used when drill stem components require shipping and storing protection.
- Plastic light-duty protectors are used when threaded drill stem components need to be protected against shipping or storage.

Certified Cast-Steel Thread Protector

- Certified cast-steel thread protectors (CCSTP) with lifting bails offer the ultimate thread protection and have certified lifting capacities to ensure safe handling of tubular products during manufacture, shipping, or at the rig site.
- Each lifting bail is tested to 300% of the maximum anticipated load and NDT-inspected for cracks after pull testing.
- It is capable of picking up one drill collar within the recommended diameter for the type and size of connection on the CCSTP.
- Threads and shoulders are precision machined to ensure proper makeup on the protected connection.
- A unique serial number is permanently affixed to each protector for complete traceability of test date, applied load vs. time, and inspection results.
- Because drill collars are often handled roughly, DRILCO recommends frequent inspection to ensure that the bail is not cracked and that proper makeup to connections is possible.

Note: Cast-steel thread protectors are only intended to assist with pick up or lay down of one drill collar at a time.

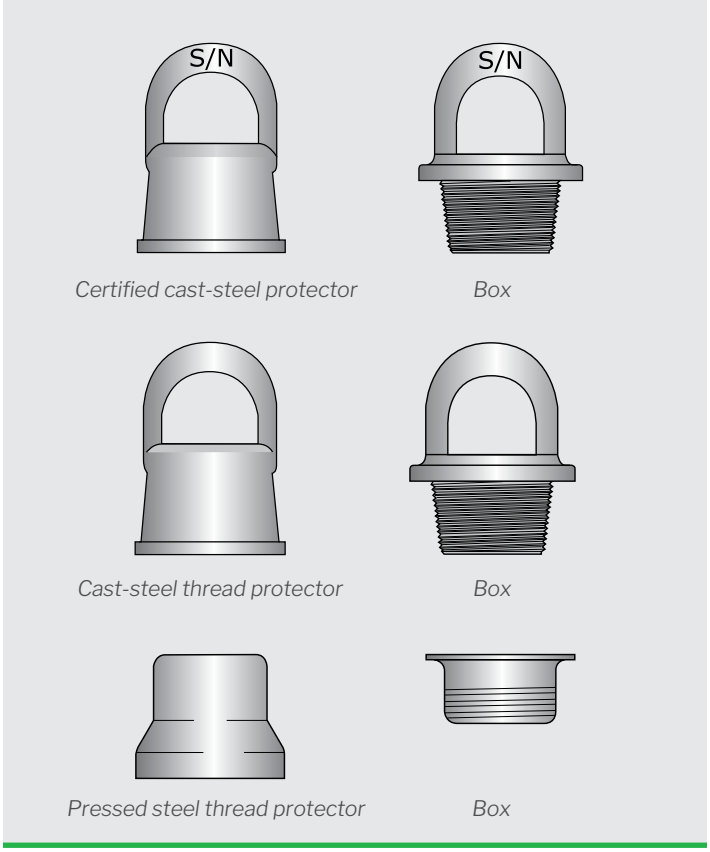

DRILCO offers three types of steel thread protectors: Certified cast-steel, cast-steel, and pressed steel.

Thread protectors are recommended when storing or transporting tubulars.

Rotary Substitutes (Subs)

Rotary substitutes or subs have two primary applications. They can be used to cross over from one connection size to another, or as the disposable component to extend the connection life of a more expensive drill string member.

DRILCO subs are heat-treated to meet or exceed API specifications for drill pipe tool joint mechanical properties. They are available with box × pin, box × box, or pin × pin connections. The sub connections are protected by a phosphate surface coating that minimizes galling on initial makeup. Precision-machined API connections are standard; proprietary connections machined by licensed vendors are also available. When subs are ordered to conform to API Specification 7–1, DRILCO is authorized to apply the API monogram.

The following rotary subs are available:

- A straight-OD sub connects drill string members that have a similar OD. The drill bit, downhole tools, Hevi-Wate drill pipe, and drill pipe can be crossed over using this sub.
- A reduced-section sub connects drill string members with different diameters that warrant the cross-sectional change necessary to accommodate different connections. This sub would be used to cross over large OD drilling tools or a tapered drill collar string.
- A kelly saver sub provides a less expensive connection between the pin end of a kelly and the box end of another drill stem component. This interposing arrangement extends the life of a kelly by allowing the saver sub to absorb the repeated connection wear a kelly would otherwise have to endure during makeup to other drill stem components. The saver sub can be equipped with a rubber protector to reduce BOP equipment and casing wear resulting from contact damage with the lower kelly connection.

Bit Sub

DRILCO manufactures a complete line of bit subs, made from materials that are heat-treated to drill collar specifications. Sizes range from 3⅛ in. to 11 in. OD and 36 in. to 48 in. length.

Lift Sub

A lift sub enables the safe and efficient handling of straight-OD tubulars such as drill collars, shock tools, jars, and directional equipment with the drill pipe elevators.

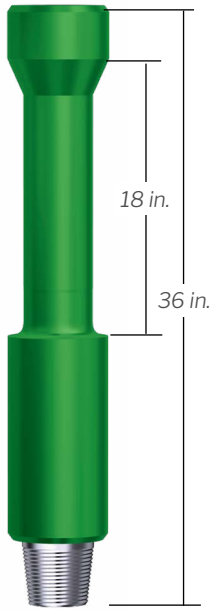

Lift Sub

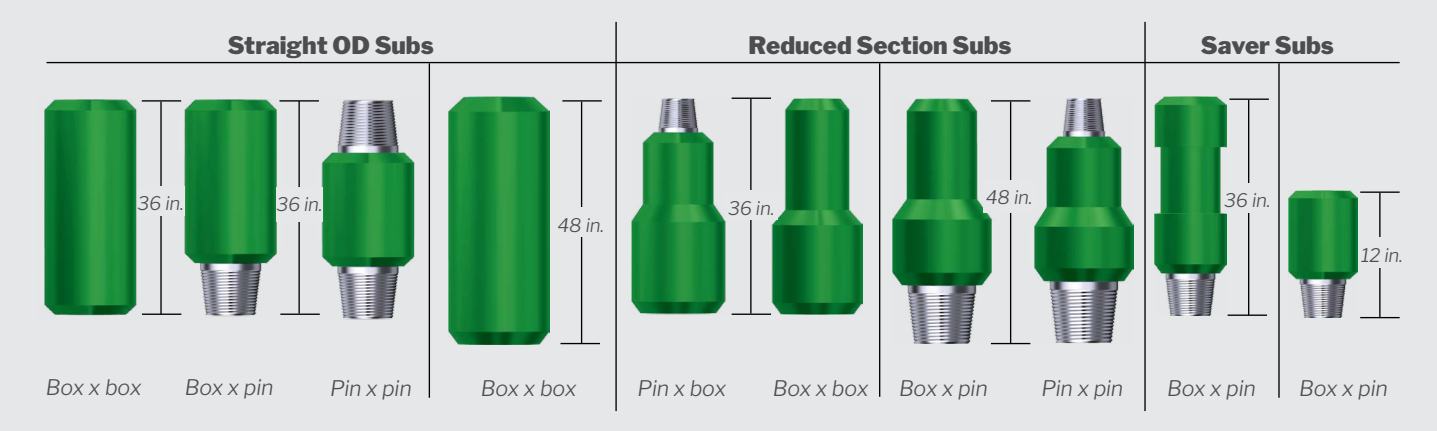

Rotary Substitutes (Subs)

Top Drive Sub

Top drive subs are positioned between the drill string and top drive to protect their threads from repeated makeup wear, which could lead to expensive maintenance and replacement costs of top drive components. Alternately, a top drive sub can be repaired or replaced easily and at much less expense if its lower pin threads become galled or damaged. They are manufactured from selected bars of alloy steel and heat treated to provide the strength required to carry the entire weight of the drill string.

Features

- Heat-treated to meet or exceed API specifications for drill pipe tool joint mechanical properties
- Precision machined API connections standard, with proprietary connections available machined by licensed vendors
- Serialized for complete material traceability

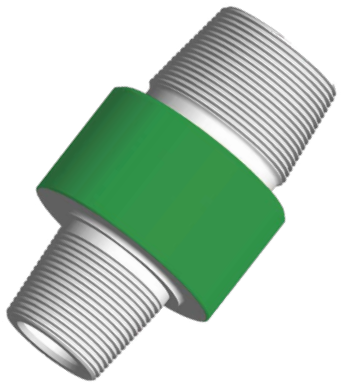

Top Drive Sub

TOP DRIVE SUB SPECIFICATIONS

OD, in.	ID, in.	Upper Pin Connection Size, in.	Lower Pin Connection Size, in.	Lower Pin Connection	
				Tensile Yield, lbm	Torsional Yield, ft.lbm
8⅝	4	7⅝ Reg	6⅝ FH	2,296,000	118,000
8⅝	3½	7⅝ Reg	5½ FH	1,619,000	72,000
8⅝	3	7⅝ Reg	NC 50	1,416,000	57,000
8⅝	2½	7⅝ Reg	NC 46	1,307,000	49,000
8⅝	2¼	7⅝ Reg	NC 38	790,000	24,000

Standard sizes shown above. Additional sizes available upon request, including box up design.
Mechanical properties based on 120,000 psi material yield strength.

Ordering instructions, please specify:

- *Use (e.g. kelly sub, cross over drill pipe to drill collar, drill collar to drill collar or bit sub)*
- *Overall length shoulder to shoulder*
- *Largest diameter*
- *Bore ID*
- *Size and type of upper and lower connections, indicating pin or box*
- *Cast or pressed steel thread protectors*
- *Reduced-section subs, add diameter of reduced section and length of reduced section: 8-, 12-, 18-, or 24-in.*
- *Bit subs, add float bore size and type, if desired*
- *Kelly saver subs with protectors, add casing OD and weight to properly size the casing protector*
- *Lift subs, specify tapered or square shoulder and drill pipe OD*

RIG EQUIPMENT

EZY-TORQ® Hydraulic Cathead

Hydraulic Power Increases Torque Arc Smoothly

The EZY-TORQ hydraulic cathead delivers consistent and smooth torque to makeup loads ranging from 40,000 to 150,000 ft.lbs for making up large-diameter BHA components with either premium or standard connections. When the system is used for rotary shouldered connections requiring less than 40,000 ft.lbs of makeup torque, the unit should be set up with a regularly calibrated load cell.

Application of smooth and consistent line pull to the rig tongs ensures proper makeup of all rotary shouldered connections. Maintaining proper connection makeup torque helps reduce wear on drill string connections, decreases maintenance costs, and reduces potential connection failures. *Note: In all applications, the torque rating of the rig tongs should never be exceeded.*

Two EZY-TORQ Systems Provide Flexibility

EZY-TORQ systems are available to fit individual rig requirements and operation parameters. The EZY-TORQ hydraulic cathead is available in two power systems to suit individual rig requirements. Available systems can be self-contained or powered by the rig hydraulic power supply. The standard hydraulic power unit configuration is rated for high temperature (131 deg F [55 deg C]), allowing it to be used in moderate (104 deg F [40 deg C]) to high ambient temperature environments without any changes or upgrades required.

TYPE SC: SELF-CONTAINED SYSTEM

The SC EZY-TORQ is a fully self-contained system. It incorporates a hydraulic power source and a control console to operate the unit's hydraulic cylinder assembly, which includes a specially rated wireline for easy connection to rig tongs. The entire unit can be temporarily or permanently installed on the rig floor as a self-contained system featuring a choice of Hydraulic or Explosion Proof (EXP) radio transmitter control.

- The Hydraulic controller comes with five 25-ft [7,620-mm] remote control hoses and two 25-ft cylinder hoses.
- The Explosion Proof (EXP) Control comes with two 25ft cylinder hoses.

Accurate and remote hydraulic pressure control

The unit is powered by a variable volume, pressure compensated piston pump that is capable of a standby condition at the desired pressure setting but at a minimal, almost zero flow output. This pump allows low standby power consumption, high-speed cylinder movement at low force-to-work-loading and a slow, steady pull at high force-to-full-loading. When a power stroke is activated and the load requires the system pressure to rise to the desired setting, the pump automatically increases flow output to match the demand and "balances" the flow and pressure to supply high force for connection make-up.

The power unit can be controlled from a convenient location on the rig with a remote control module, which features a hydraulic lever actuated control valve, a pressure gauge, and a pilot relief valve to enable pressure operation and regulation. A wireless EXP controller is available with controls and a hip belt carrying option offering maximum mobility as there are no hydraulic connections to the EZY-TORQ unit.

Advantages

- Precise pressure control enables correct makeup.
- Simple hydraulic circuit ensures trouble-free performance.
- The variable volume, pressure compensated piston pump provides better efficiency, speed, control, and steady hydraulic energy from a single pump.
- Remote Hydraulic and EXP Control operation eliminates electrical hazards.
- For maximum safety, an Explosion Proof EXP 2.4GHz Radio transmitter is available. The EXP controller is triple certified (ATEX, IECEx, and NEC/CEC), allows license-free operation and Global operational approval for the majority of locations.
- All critical parts easily reached for maintenance or replacement if needed.
- Backup control lever built into the control unit in event of remote control failure or loss.
- Storage area on the HPU to store hoses and control module.
- Built-in skid with forklift pockets and lifting eyes.

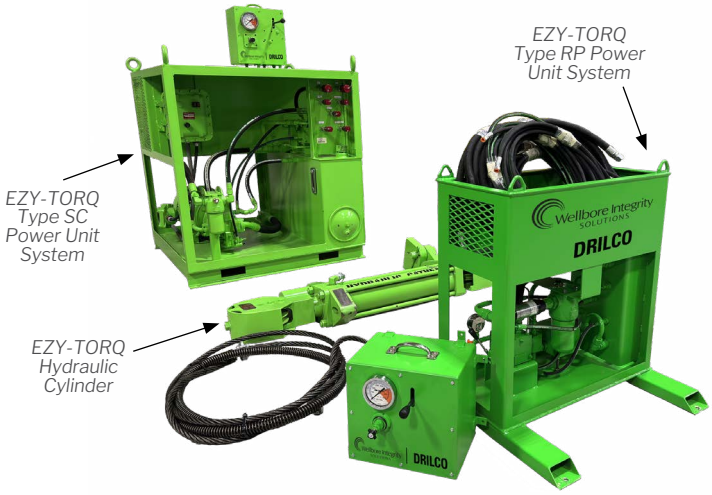

TYPE RP: CONNECTS TO EXISTING RIG HYDRAULIC SYSTEM

The Type RP EZY-TORQ system provides the same reliable performance as the Type SC system, but it has a smaller foot print. It operates with hydraulic components that connect to an existing rig hydraulic power source, such as the accumulator portion of a BOP system or positive displacement system. The Type RP consists of the main control unit, choice of Hydraulic or EXP, and two 25-ft [7.62 m] cylinder hoses. Conversion hydraulic fittings to existing rig components are supplied by the customer.

Pressure control with a minimized footprint

The remote control module is operated by a Hydraulic or EXP Controller, eliminating the hazards associated with electrical circuits. The hydraulic remote features an adjustable relief valve and a high-pressure gauge for setting the required fluid pressure. The pilot relief valve operates a pressure-reducing valve on the main control unit that governs the maximum pressure developed on the blind end of the cylinder (makeup stroke). An additional preset relief valve limits maximum pressure on the rod side of the cylinder (retraction stroke). A lever-actuated hydraulic valve mounted on the remote-control module can extend, retract, or stop cylinder movement.

- Hydraulic control comes with five 25-ft [7,620-mm] remote control hoses and two 25ft cylinder hoses.
- Explosion proof EXP Control comes with two 25ft cylinder hoses routed from the HPU to the cylinder.

Advantages

- Utilizes existing rig hydraulic equipment, minimizing unit space requirements.
- Remote Hydraulic and EXP Controller operation eliminates electrical hazards.
- Hydraulic Control console has an adjustable relief valve and a high-pressure gauge sets required fluid pressure.
- With the EXP module, the pilot relief valve will be replaced with a wireless Radio Frequency (RF) controlled adjustment for a proportional relief valve, with a digital readout, and a control potentiometer to adjust pressure.
- A backup control lever built into the main control unit is provided in the event of the remote failure or loss.
- A storage basket on the unit is available to store hoses and the control module.
- Built-in skid with forklift pockets and lifting eyes.

Note: The Hydraulic RP Control Unit is designed with a closed center valve for connection to a hydraulic system using accumulators or a piston pump, but can be easily configured for a fixed displacement pump if desired.

EZY-TORQ Cathead Recommended Spare Parts Kits for 12 Months Operation

Description	Part Number
Self Contained Unit (SC)	80066349
Rig Power Positive Displacement Unit (RPPD)	80067580
Rig Power Accumulator Unit (RPAC)	80068177
Type SC Power Unit Spare Parts Kit	80068224
Type RP Auxiliary Unit Spare Parts Kit	80068223
Cylinder Assembly Spare Parts Kit (includes wireline assembly)	03677701

Shipping Weight Data

Hydraulic Cylinder Assembly‡, lb	SC Unit Assembly†, lb	RP Unit Assembly†, lb
900	950	450

All weights are approximate. † Contains remote control module with hoses
‡Contains wireline assembly

System Power Design Data

Motor Design	Cycle Frequency, hz	Amperage, amp		Cylinder Time, seconds	
		230 v	460 v	Power Stroke	Return Stroke
15 hp–1,750 rpm	60	37.5	18.8	10	5

Cylinder Assembly

Minimum Flow Rate	Maximum Flow Rate	Maximum Test Pressure	Maximum Working Pressure	Stroke Length	Line Pull	Torque Range
4 galUS/min	35 galUS/min	3,000 psi	2,500 psi	22.5 in	32,900 lbf	40,000–150,000 ft.lbf
18.9 l/min	132.5 lpm	20.68 Mpa	17.2 Mpa	571.5 mm	146,000 N	54,240–203,400 N.m

Ordering instructions, please specify:

- *EZY-TORQ Type SC System (standard)*
- *EZY-TORQ Type RP System for rig accumulator utilization or positive displacement pump.*
- *Hertz (Hz) of power source: 60 Hz*
- *Motor Voltage–The following are available:*
  - *60 Hz–230V, 460V, 1750 RPM, 15HP*
- *Motor Temperature Rating*
  - *131 degF [55 degC] ambient operating temperature standard.*

Tru-Torque Automatic Torque Control System (ATCS)

DRILCO's Tru-Torque* automatic torque control system ensures the recommended torque is accurately applied to each connection during makeup on the rig floor. The system will also cache the amount of breakout torque used during pipe pulling operations to prevent improper torque from being applied, resulting in swelled boxes, stretched pins, and galled threads and shoulders.

Run on a Windows 7 platform, the Tru-Torque system can detect, record, and control the torque values of connections to enable the proper makeup of each drill string component. This extremely accurate and precise control unit automatically terminates makeup when the correct amount of torque needed for a connection is reached.

The Tru-Torque system includes an intrinsically safe load cell, explosion-proof air controllers, and an industrial computer that has been certified to operate in a Class 1, Division 2 environment. The Tru-Torque system can be used on any rig with manual tong arms that are controlled by pneumatic, or air over hydraulics. DRILCO will install the system and provide the driller with real-time monitoring and torque control. Tru-Torque system is vital to maintaining production levels and avoiding costly torque-related damage to the drill string. And, its rugged design enables operation in the harshest conditions.

Benefits

- Promotes safety by allowing the driller to focus on rig floor activities
- Reduces costs by minimizing drill string service and repairs necessitated by insufficient makeup torque
- Reduces trip time by improving pipe handling efficiency through uniform connection makeup time
- Minimizes washouts and twistoffs due to improperly torque connections
- Controls torque on rigs with manual tongs and air or hydraulic activated cathead clutches.

Features

- Controls and settings are menu-driven, easy to learn, user-friendly, and within easy reach of the driller
- Direct sunlight readable LCD
- Adjustable for any tong arm length up to 99 in
- Torque and over torque audible alarm
- Digital load cell: 0 to 30,000 lbf with 4:1 safety factor
- Onboard data storage for easy retrieval
- Embedded Windows 7 operating system

Tru-Torque Automatic Torque Control System (ATCS)

Hardware

- NEMA 4x certified stainless steel controller housing and rugged electronics
- Power supply automatically switches to correct voltage: 110/220 V AC
- Weather-proof, stainless steel enclosure
- Sunshield and yoke mount
- Waterproof speakers
- On-board, self-diagnostic testing
- NEMA 4x enclosure rating enables controller to prevent water jetting

Environmental

- Operating temperatures -40 degC [32 degF] to 50 degC [122 degF]
- Storage temperatures -60 degC [140 degF] to 85 degC [185 degF]
- Operational 50–500 Hz vibrations
- FCC Class B EMC emissions
- FCC Class B EMC immunity
- FM or equivalent, C1D2 approvals

Accurate, Consistent Torque Control in Four Easy Steps

Tru-Torque systems are installed at the wellsite by qualified DRILCO personnel. Once installed, the system can be used with a simple four-step process:

1. The operator selects and presets the torque required to properly makeup the connections. The torque-trip point can be reset incrementally to the desired value.
2. The load cell electronically measures pull on the tong arm, using temperature-compensated strain gauges set in sturdy, high-grade stainless steel housing.
3. The torque controller receives the signal from the load cell and converts it to a torque reading, which is compared to the pre-established torque-trip point.
4. When actual torque equals the trip-point value, the system controller sends a signal to the air controllers, which exhaust air to the cathead clutch, immediately stopping the connection makeup. And an audible alarm sounds to inform the rig crew that makeup is complete. The system automatically resets the air controllers after each makeup.

TRU-TORQUE AUTOMATIC TORQUE CONTROL SYSTEM SPECIFICATIONS	
System	
Line Pull	0–30,000 lbf load cell range with 4:1 safety factor
Accuracy	±2% from 2,500 to 30,000 lbf ±3% from 1,000 to 2,500 lbf
Torque	0–150,000 ft.lbf with 60-in tong arm length
Line Pull Settings	10-ft.lbf increments
Torque Settings	10-ft.lbf increments
Tong Arm Settings	1 in. increments from 0 to 99 in.
Indicator	6-digit readout
Electrical Power	94–265 V, AC auto switching, 47–63 Hz, with line AC filter, 0.4 A
Connecting voltage	Load Cell:±14 V, DC through intrinsically safe barriers Air Controllers: 23–19 V, DC by cable with grounding and locking plug
Network	802.11n via SMA CONN, 802.3 via MIL-SPEC CONN
Cold weather compensated	Internal heater control and 40 W heater
Operating system	Windows 7
Hard drive	16 GB, SSD
RAM	4 GB
Shock and vibration	Shock: 20 G for 6 ms, Vibration: 2 G, 10–500 Hz, 3 axes
MTBF	30,000 hours
Load Cell	
Calibration	0.2% at 30,000 lbf with ±0.05% NIST traceable line pull
Calibration Sheet	Furnished upon request
Construction	Manufactured from stainless steel and sealed for rugged use
Safety Factor	4:1 at 30,000 lbf line pull

Rig Floor and Drilling Packages

Modern drilling rigs and programs require a comprehensive list of tools and equipment. With a history of setting industry standards, DRILCO supplies drilling and rig equipment packages that will help ensure a successful start or addition to your drilling operation. Complete packages eliminate the problems associated with acquiring equipment from multiple sources: incompatible components, varying states of wear, poorly maintained equipment, and inventories with incomplete or duplicate equipment.

Contact your local DRILCO representative for more information on complete rig floor and drilling packages, or individual components to meet your drilling requirements.

RIG FLOOR AND DRILLING PACKAGES

Equipment	Floor Package	Drilling Package
Top Drive Subs	•	•
Reduced Section Subs	•	
Straight OD Subs	•	
Lifting Subs	•	
Thread Protectors	•	
Ezy-Torq Systems	•	
Tru-Torque Systems	•	
Drill Collars	•	•
DRILCO Hevi-Wate Drill pipe	•	•
Mud-Chek AP Mud Saver Valves	•	•
Hexagonal Kellys	•	•
Slips	•	•
Junk Baskets		•
Cement Mills		•
Junk Subs		•
Impression Blocks		•
Casing Scrapers		•
Reamaster-XTU/DTU Hole Openers		•
Open and Sealed Roller Reamers		•
DOG Subs		•
Integral Blade Stabilizers		•

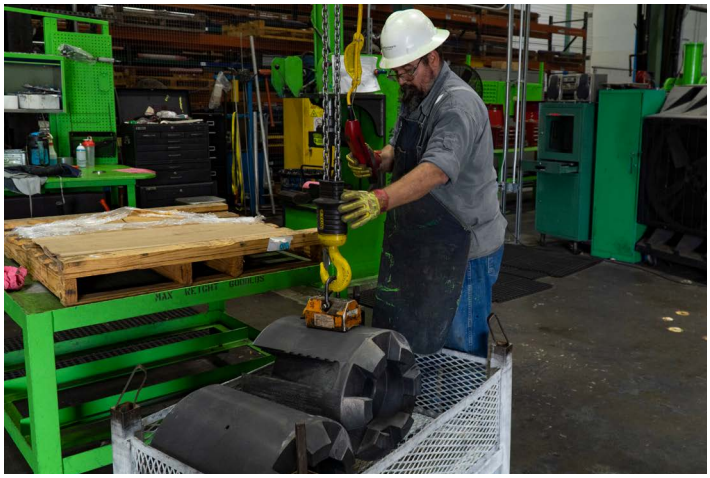

Complete packages eliminate the problems associated with acquiring equipment from multiple sources.

Double-shouldered connections improve torque and hydraulic performance

DRILCO offers drill pipe with standard API threaded connections for all available sizes. In addition, we offer DRILCO DS compatible double-shouldered connections, which use a standard API thread form with a secondary internal shoulder. The connection allows you to increase ID or reduce OD, which significantly improves hydraulic and torque performance over

Tubular connection repair services include providing API stress-relief groove pins and bore back boxes, cold rolling thread roots, and phosphate coating to help prevent galling.

TUBULAR SERVICES

Machine Shop Services

Highly trained and experienced DRILCO machinists provide a variety of services to keep drilling tools operating at peak performance, performing work to API or customer proprietary specifications as well as meeting industry leading DRILCO standards. Located in most major oilfield operating areas worldwide, DRILCO service centers offer consistent and high quality drill string repair. Each of these facilities performs work to API, proprietary operator specifications, and DRILCO requirements.

DRILCO machine shops provide a number of routine services:

Machining Rotary Substitutes (Subs)

DRILCO machine shops can fulfill all rotary sub requirements — double-pin or double-box crossovers, bit subs, lift subs, top drive subs, custom subs, or any sub listed in the Rotary Subs section of this catalog. Whether routine or urgent, all orders are manufactured to exacting specifications.

Machining and Repairing Rotary Shouldered Connections

New and used rotary shouldered connections are machined and repaired to API and DRILCO standards. Services include providing API stress-relief groove pins and bore back boxes, cold rolling thread roots, and phosphate coating to help prevent galling.

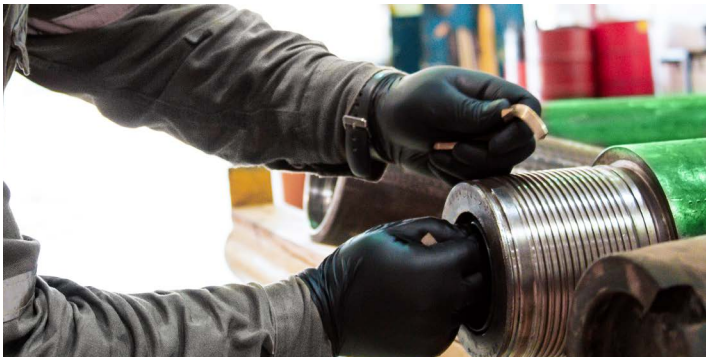

Tubular connection repair services include providing API stress-relief groove pins and bore back boxes, cold rolling thread roots, and phosphate coating to help prevent galling.

Tool Joint Buildup

Tool joint buildup is an industry-accepted procedure for extending the service life of standard and Hevi-Wate drill pipe. Tool joints that meet minimum recommended length and diameter criteria can be professionally restored to their original OD at selected DRILCO facilities. A properly rebuilt tool joint will provide a connection with the same OD, seal-face area, and bevel diameter as a new tool joint can add years to the life of existing tubular inventory. A DRILCO representative can evaluate downgraded tubulars to help determine which joints are repairable and the costs involved.

Stub Welding (Stubbing) Ends on Drill Collars and Specialty Tools

Drill string members can be returned to service with a process called stub welding or stubbing under certain conditions:

- Repeated reworking of connections has left the tool too short for use
- Tool OD wear has reduced the bending and torsional strength of the box connection
- Bore erosion has affected the bending, torsional, and tensile strength of the pin connection

DRILCO specializes in a cost-effective restoration technique: Stub welding new material to the ends of worn tools returns their physical dimensions to acceptable values, thereby prolonging tool life.

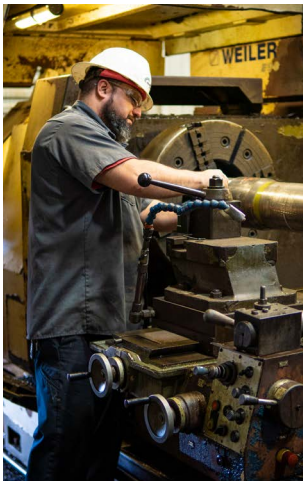

Highly trained and experienced DRILCO machinists provide a variety of services.

Stub welding repair extends the working life of various drilling tools, including drill collars, Hevi-Wate drill pipe, heavy-wall drill pipe, stabilizers, roller reamers, hole openers, and rotary kellys. The life of shortened nonmagnetic tools including NMDCs, MWD collars, and other expensive components can also be extended with proprietary stubbing processes and materials available at select facilities.

Repairing Rotary Kellys

The rotary kelly is the drive link between the surface power of the rig and the drill bit. When kelly wear becomes advanced, selected DRILCO facilities can remedy the following conditions:

- Connection damage: The upsets at each end of the kelly are manufactured with sufficient length to allow the connections to be recut a number of times.
- Crooked: In most cases a bent kelly can be straightened with a hydraulic straightener. The kelly should be closely inspected for indications of fatigue damage prior to straightening and its subsequent return to service.
- Rounded drive corners: This condition can be remedied in two ways: The first and easiest method is to reverse the ends, enabling the unworn corners to be placed into service. The second method is to re-machine the drive flats to a smaller, non-API size. This process may require special milling equipment not available in most field service centers. Moreover, when this procedure is selected, special drive rollers must be purchased for use with the modified kelly, which will also have a reduced load capacity.

Kelly life can be significantly extended by several methods:

- Using a saver sub to reduce thread wear and damage on the lower connection
- Using a scabbard when transporting the kelly
- Lubricating the drive surfaces of the kelly, allowing it to slide freely through the drive bushing
- Frequent inspection for indications of fatigue damage and changing wear patterns on the kelly flats

Machine Shop Services

Hardbanding

DRILCO is well known for its quality application of hardbanding products to protect drill collars, heavy-wall drill pipe, standard drill pipe, and other drilling tools against OD wear. Either conventional tungsten carbide hardbanding or premium casing-friendly products can be applied as required.

For Hevi-Wate drill pipe, hardbanding is recommended for the pin and box tool joints and the center upset wear pad. Spiral Hevi-Wate drill pipe requires only tool joint hardbanding.

As indicated in the Drill Collar Hardbanding Options reference, three standard options — Types A, B, and C — are available. Drill collars with ODs smaller than 4¾ in. cannot be hardbanded because of the thin body walls of smaller size collars.

Straightening

Drill pipe, drill collars, Hevi-Wate drill pipe, and rotary kellys can be straightened at most DRILCO facilities. A certified DRILCO inspector automatically checks for straightness during the standard inspection process. Bent tubular products and drilling tools can cause premature wear and subsequent failure of BOP equipment, and drill string and BHA members. The most common causes of bent drill pipe are improper makeup and breakout procedures, dropping the drill string, and mishandling during transportation.

Makeup and Breakout Services

These services help improve rig economics by enabling drill pipe to be shipped in preassembled double lengths, reducing the rig time spent on making up or breaking out connections. In addition to makeup and breakout of drill pipe, qualified operators use calibrated equipment to break in rotary shouldered connections in a controlled environment, ensuring reliable on-site performance.

Other Services

Other services are available:

- Drill collar spiraling
- Drill collar OD turning
- Stabilizer redress and repair
- Custom repairs

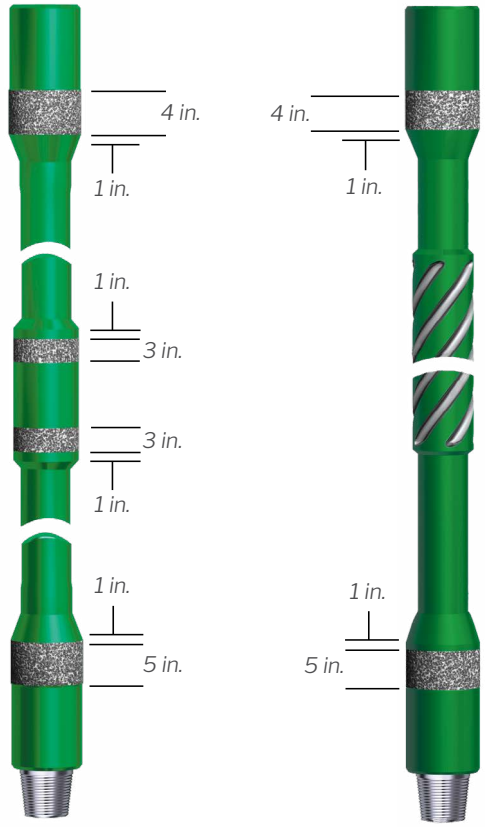

Hevi-Wate drill pipe hardbanding–standard, right, and spiraled, left.

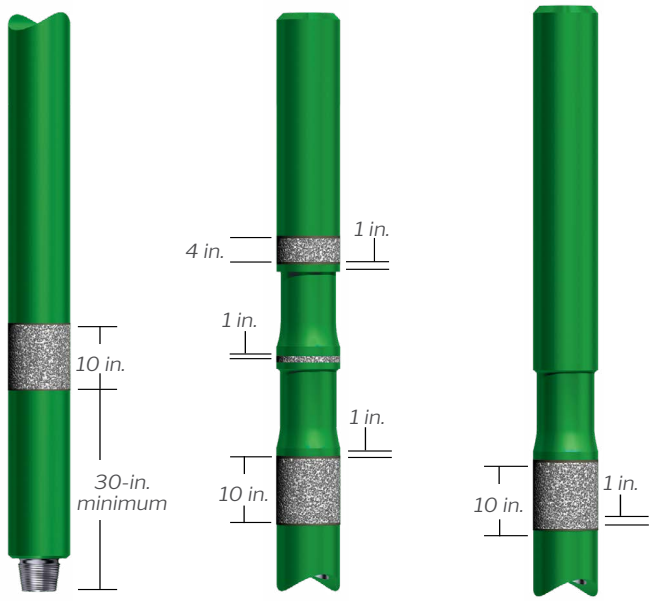

Drill collar hardbanding options.

Wellbore Integrity
Wellbore Integrity

Inspection Services

Periodic inspection is an important step in preventing drill string failure. DRILCO offers quality, API-approved inspection services for drill collars, drill pipe, Hevi-Wate drill pipe, and other downhole tools. A worldwide network of service centers and locations offering tubular repair and inspection has been established to ensure global coverage.

Extensive Training for Reliable Inspection Results

DRILCO inspectors are ASNT Level II certified in the principles and techniques of oilfield inspection. Extensive training combined with experience means that when a tool is inspected and marked with the "OK DRILCO" stencil, it is ready for service.

Equipment can be inspected for adherence to any of the following specifications: API-RP7G, Spec 7, RP 5A5, 5CT; DS-1; NS-2; third-party standards; or customer-defined requirements.

Field Inspection

DRILCO mobile units are completely self-contained and easily transported to remote land or offshore locations. Minor thread and shoulder blemishes can be repaired on site. Field repair and salvage helps return drilling tools to service quickly and reduces tubular maintenance costs by eliminating unnecessary trucking and tool rental.

DRILCO inspectors use several nondestructive testing methods to check high-stress areas such as connections, slip areas, upsets, welds, radius changes, and tubes. Any of the following inspections can be conducted at customer facilities or remote locations:

- API/RSC thread inspection (API-TI)
- Dimensional inspection (DT)
- Visual inspection (VT)
- Magnetic particle inspection (MT)
- Liquid-dye penetrant inspection (PT)
- Electromagnetic tubular inspections (ET-MFL)
- Ultrasonic inspection of rotary shouldered connections (UT-RSC)
- Ultrasonic inspection of high-stress areas and tube upsets (UTEA)

DRILCO inspectors are ASNT Level II certified in the principles and techniques of oilfield inspection.

In-Shop Inspection

Service centers offering tubular repair and inspection have been established in most major drilling centers worldwide.

Most service centers are equipped with the latest, automated, electromagnetic induction and ultrasonic inspection equipment for fast, efficient, high-quality inspection. In addition to the field inspection services listed, these centers offer:

- Full-length, dual-function EMI
- Full-length ultrasonic inspection (FLUT) — available at select locations

DRILCO-log EMI tubular inspection improves reliability through a number of capabilities:

- Digital data acquisition and display
- Dual-function defect detection — flaws and wall loss
- Recorded data easily viewed on most computers
- Fast and accurate system calibration
- Double the standard inspection rate
- Automatic detection of defects and their locations

DRILCO mobile units are completely self-contained and easily transported to remote land or offshore locations.

Mobile Hardbanding Services

Premium Mobile Hardbanding Offers a Superior Solution for Extending the Life of Expensive Tubulars

DRILCO is well-known for the quality application of premium hardbanding that provides OD wear protection on drill pipe, drill collars, Hevi-Wate drill pipe, and other drilling tools. High-quality hardbanding services are also available through a portable system that can be set up and operated at the rig or operator's facility, eliminating the significant freight costs associated with transporting tubulars to and from a machine shop. Maintenance time is minimized and use of tubular inventory is maximized, resulting in a higher return on drill string investment. The fully automated unit ensures consistent, quality hardband application every time.

Mobile Hardbanding Advantages

- Fully-trained and qualified personnel ensure high quality, consistent results.
- Superior abrasion and wear protection extends the life of drilling tubulars.
- Standard tungsten carbide and multiple premium hardbanding materials and casing-friendly products offer a wide range of protection options.
- Mobile hardbanding is now available from many of DRILCO's 24-hour service centers worldwide.

Application Process

The DRILCO standard hardbanding uses an automatic, metal-arc, inert-gas-shielded, consumable electrode process that closely controls preheat and post-heat conditions. When some types of hardbanding are replaced, it may be necessary to remove the old material before applying new material. Consult with the DRILCO hardband applicator prior to application for more information.

Hardbanding Materials

DRILCO offers hardbanding solutions that work well for openhole drilling and specialty casing-friendly hardbanding that performs best in cased hole drilling applications. A selection of casing-friendly, non-tungsten-carbide hardbanding from industry-approved suppliers is also available.

Hardbanding Standards

- Drill pipe: Both tungsten carbide and casing-friendly types of hardband are available upon request.
- Drill collars: Hardbanding is the most effective way to reduce the OD wear that occurs on a drill collar under normal, openhole drilling conditions. Standard hardbanding material consists of granular tungsten carbide that is fed into the molten weld puddle to obtain uniform distribution of the tungsten carbide particles.
- Hevi-Wate drill pipe: Hardbanding placed on the tool joints and center wear pads will increase abrasion resistance and extend service life. Spiral Hevi-Wate drill pipe requires only tool joint hardbanding.
- Other applications are available. Consult your DRILCO representative for more information.
- Normal application is flush to 1/32 in. above the drill collar OD or tool joint (unless otherwise specified).

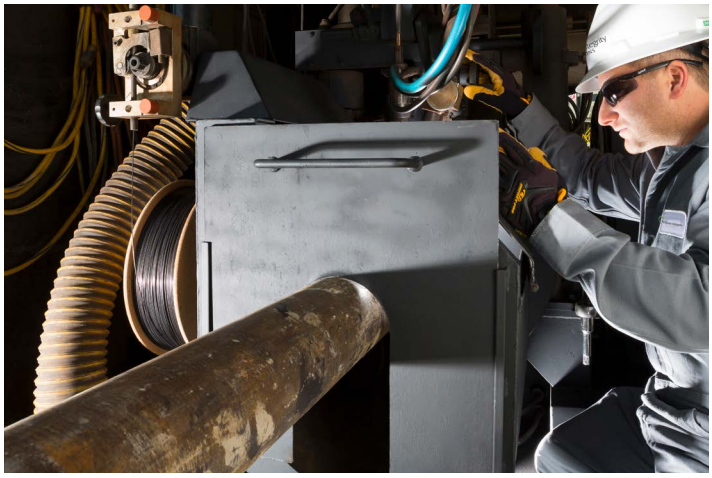

DRILCO offers premium hardbanding materials and casing-friendly products for a wide range of protection options.

Tubular Management Services

DRILCO tubular management services (TMS) provide a comprehensive range of inventory inspection, maintenance, repair and storage solutions for drilling tubulars and accessories. The DRILCO TMS program provides inventory visibility, timely maintenance, and reduced repair costs through centralized maintenance, repair, and storage locations.

DRILCO Service and Reliability

Tubular reliability is always a major priority in drilling operations. Offshore, deepwater, extended-reach, and even standard drilling operations require tubulars that undergo the best maintenance processes and repairs. Fully equipped DRILCO service and support facilities offer several quality assurance capabilities:

- State of the art inventory control
- Advanced maintenance equipment and quality control processes
- Premium connection repairs – Grant Prideco, VAM, and Tenaris licenses available in selection locations
- 24-Hour service centers
- Support for inclement weather operations
- Single-source responsibility for all inspection, maintenance, and repairs
- Load out and delivery of products

Global Network of Service Centers

DRILCO has a worldwide infrastructure to support drilling operations regardless of geographic location. With strategically located inventory locations and machine shop facilities, fast and dependable response is available around the world, 24/7. Contact your DRILCO representative for details.

TMS provides a range of tubular services at either customer or DRILCO facilities.

Wellbore Integrity
SOLUTIONS

Wellbore Integrity Solutions
1310 Rankin Road
Houston, Texas 77073 USA

Copyright © 2024 Wellbore Integrity Solutions. All rights reserved.

No part of this book may be reproduced, stored in a retrieval system, or transcribed in any form or by any means, electronic or mechanical, including photocopying and recording, without the prior written permission of the publisher. While the information presented herein is believed to be accurate, it is provided "as is" without express or implied warranty.

Specifications are current at the time of printing.

WIS-BR-MKT-006_rev11

wellboreintegrity.com

RED BARON | DRILCO | THOMAS TOOLS