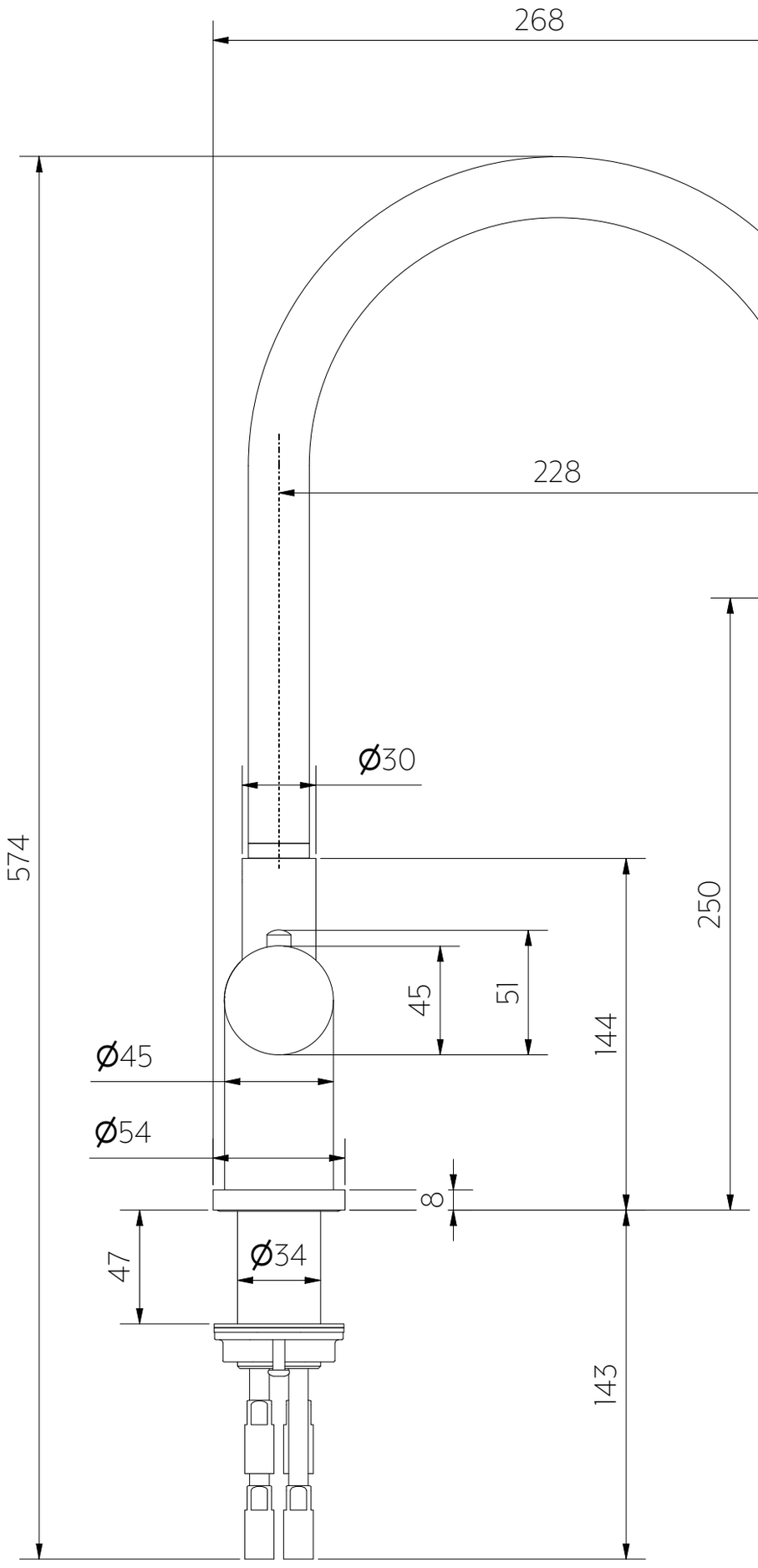

Side View

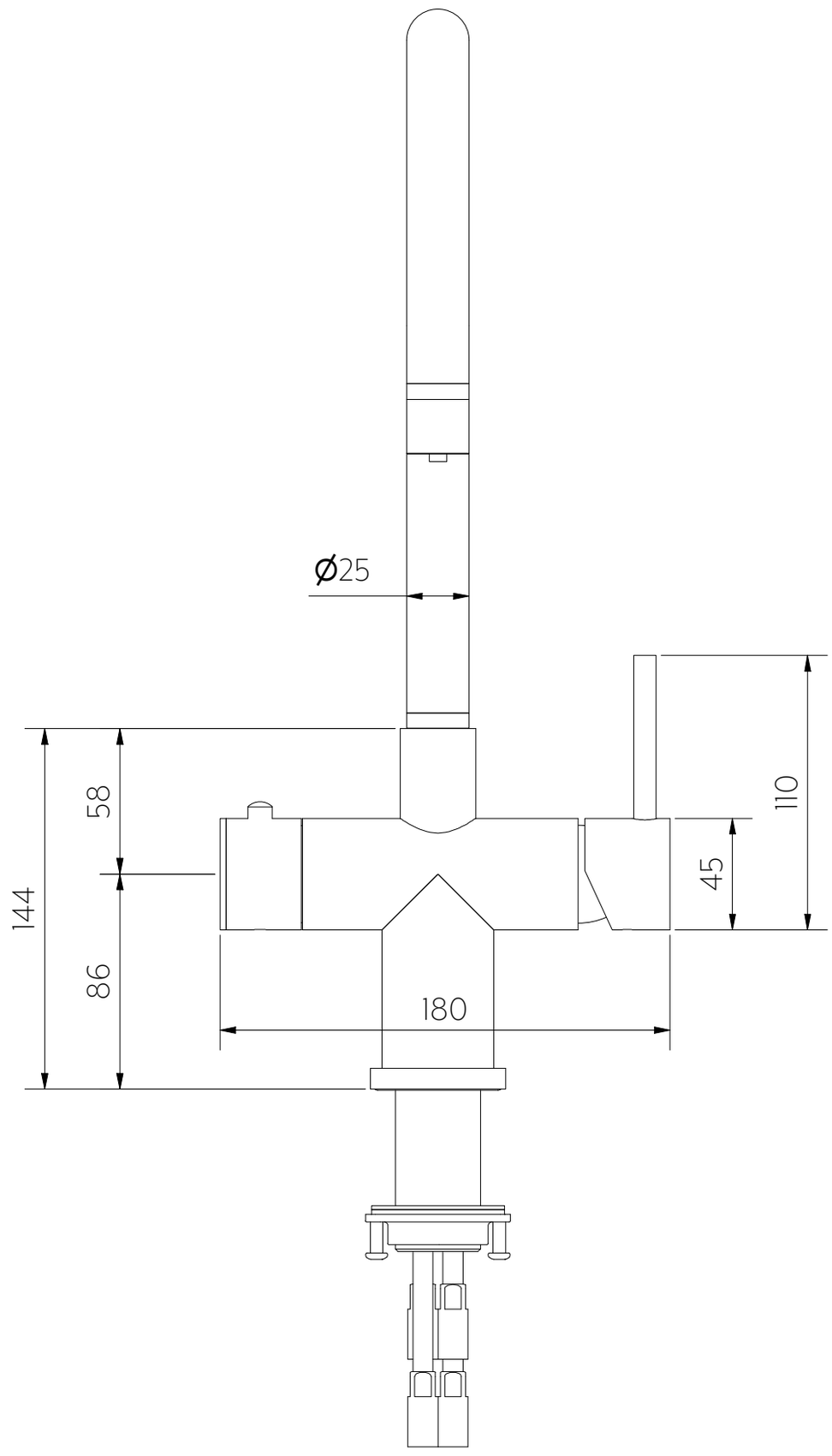

Front View

Note: Dimensions are nominal measurements only