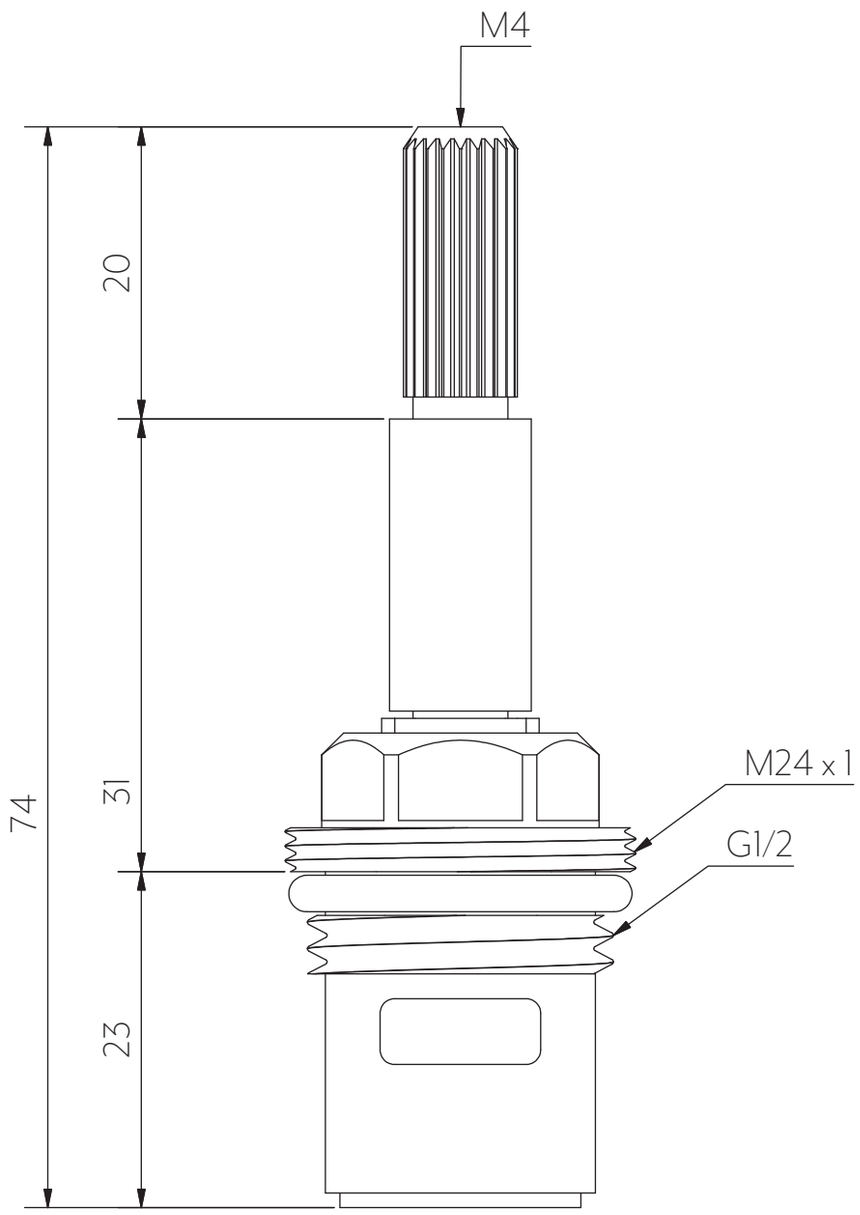

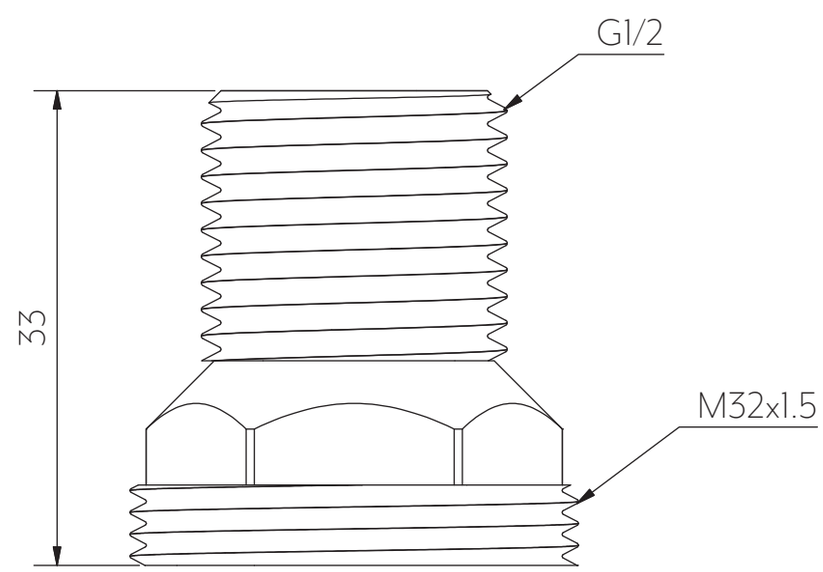

Note: Dimensions are nominal measurements only