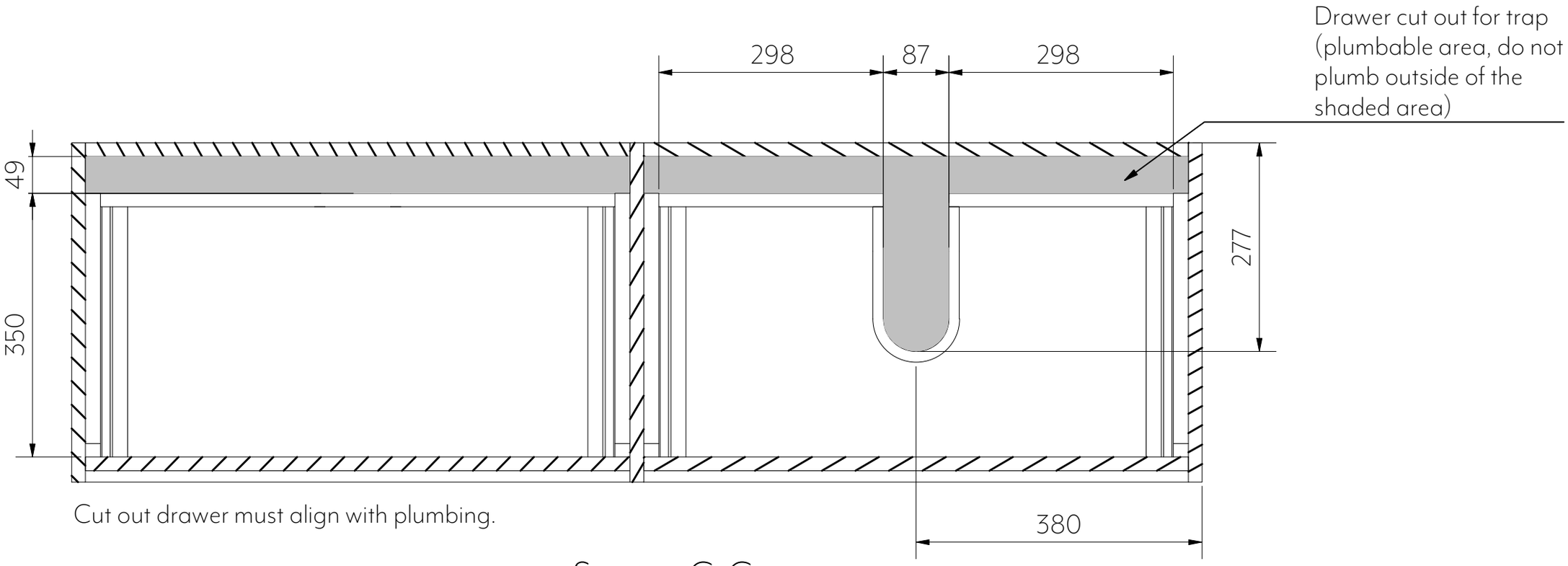

Section G-G

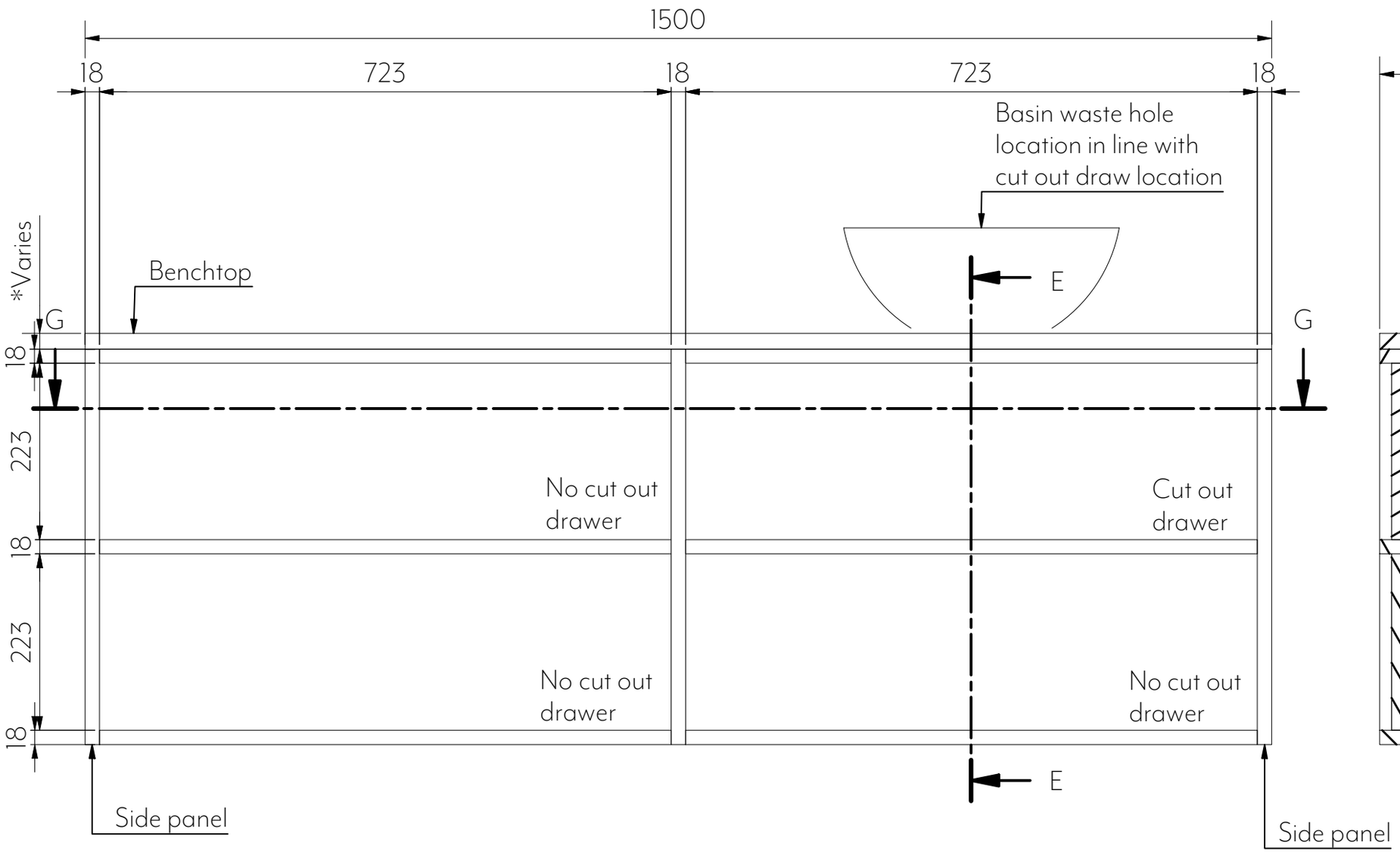

Front View

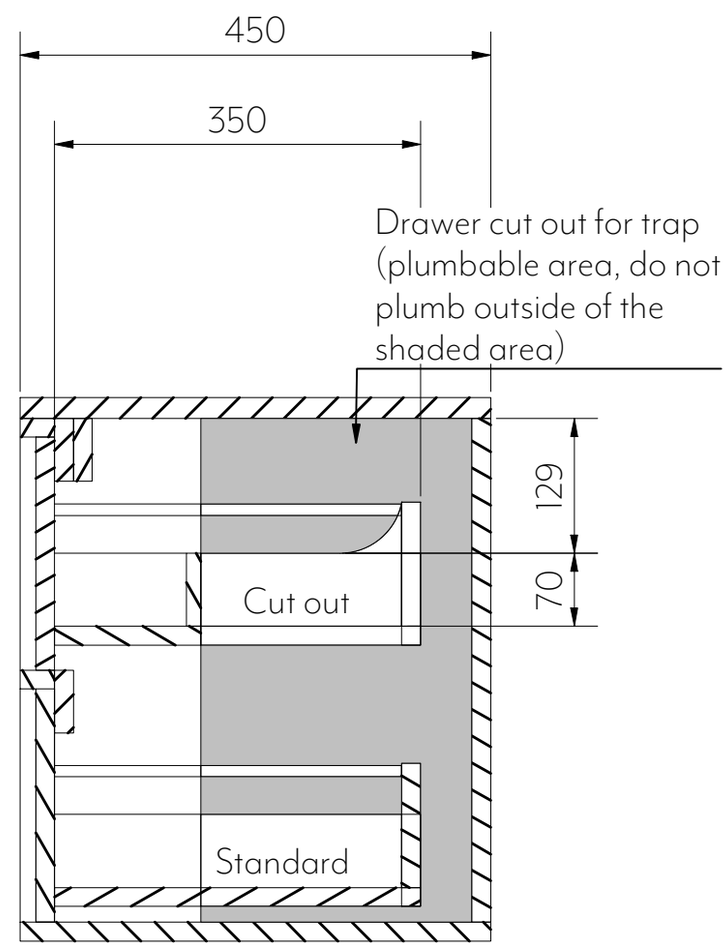

Section E-E

Note: Dimensions are nominal measurements only