NOTES:

1. ALL PARTS, MATERIALS AND PROCESSES SHALL COMPLY WITH HACH'S RESTRICTED MATERIALS SUPPLIER SPECIFICATION DOCUMENT, HACH P/N 8600000.

REVISION			
REV	DESCRIPTION	ECO #	DATE
D	RELEASED PER ECO	C134244	5/23/2023

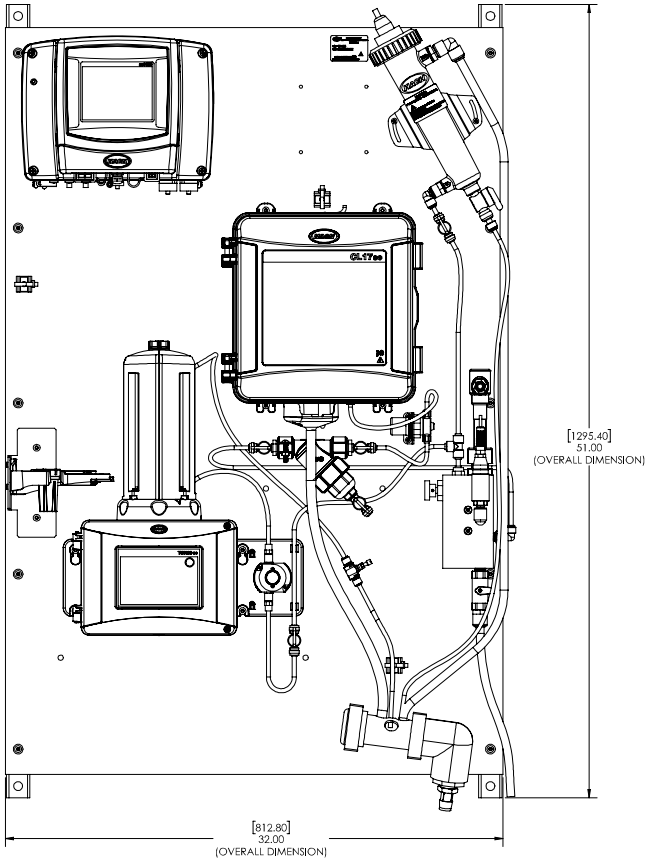

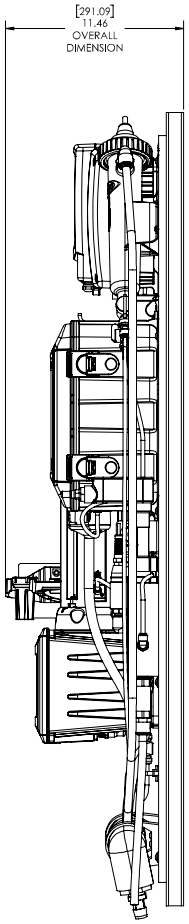

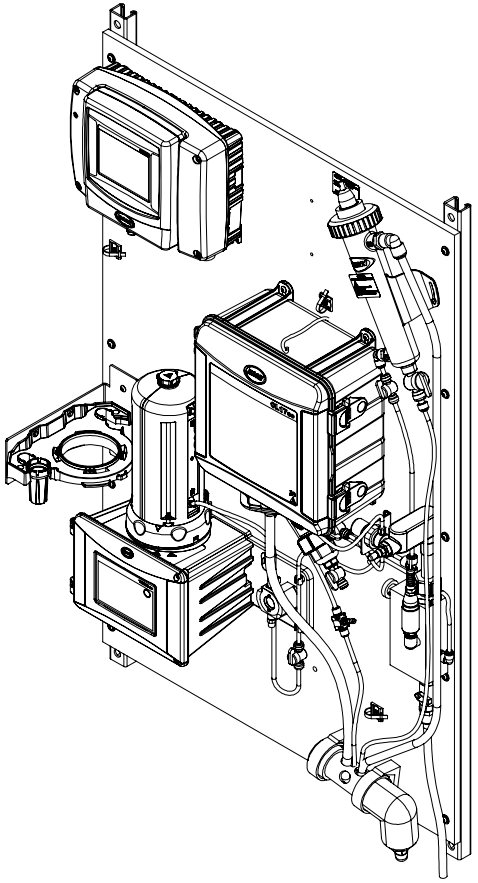

PART CLASSIFICATION: MINOR B	THE SOLID CAD FILE IS THE APPROVED REF. AUTHORITY FOR ALL DIMENSIONS. UNLESS OTHERWISE SPECIFIED: DIMENSIONS ARE IN INCHES [MM] TOLERANCES: X ± .03, .X ± .01, .XX ± .005, ANGLES ± 1°		NAME	DATE
		ENGINEER	P. SHETTY	06/21/2019
		DRAWN	S.BHAVI	3/5/2018
		CHECKED	Not Checked	
		PRODUCT MGR	Benjamin Schlike	5/23/2023
		INTERPRET GEOMETRIC TOLERANCING PER: ASME Y14.5M-1994		
		THIRD ANGLE PROJECTION		
		DO NOT SCALE DRAWING		

HACH COMPANY
5600 LINDBERGH DR
LOVELAND, CO. 80538

TITLE: WDMP - SIX SENSORS ; TU5300sc WITH ACM & CL17sc

SIZE	DWG. NO.	REV
D	8867200	D
SCALE: 1:4		SHEET 1 OF 2