CID ATTACHMENTS

CONCRETE CLAW

SLM OWNER'S MANUAL



AUG
2026

OPERATING INSTRUCTIONS| SAFETY RULES | MAINTENANCE PROCEDURES

REGISTER YOUR PRODUCT

CID WWW.CIDATTACHMENTS.COM 336-859-2002

MODEL		WEIGHT	
PART		HP RANGE	
SERIAL			
HYDRAULIC PRESSURE		HYDRAULIC FLOW	

Please see Page 7 for instructions of where to find your model and serial number.

⚠WARNING

To prevent personal injury or even death, be sure you read and understand all the instructions in this manual and other related OEM equipment manuals! This attachment is designed for the purpose specified. DO NOT modify or use this attachment for any application other than that for which it was designed.

Thank you for choosing CID. This attachment has been designed and manufactured to meet the needs of discerning users. We are committed to providing you with a heavy duty product that will provide years of satisfaction and safe operation.

This manual will provide instructions on how to safely operate and maintain this attachment. All users must read and understand this manual before operating this attachment. Upon reading this manual, all users should sign the “Safety Acknowledgment Form” at the end of this manual.

Please record your model and dealer information on the inside front cover. You will be asked to provide this information when ordering parts or requesting service. If you need more information on this product, contact your local dealer or visit *www.cidattachments.com.*

Sincerely, Cid Attachments

CID ATTACHMENTS

Reproduction With Permission Only, CID, INC. All Rights Reserved. This manual may not be reproduced or copied, in part or in whole without written permission.

CIDCC-MANU-V3M0826 / THIRD EDITION / AUG 2026 Approved: Jon Williams

TABLE OF CONTENTS

INTRODUCTION.....2

SECTION 2 CONCRETE CLAW
2.0 **Concrete Claw**.....4

SECTION 3 BASIC SAFETY AND OPERATING PROCEDURES
3.0 Safety Terms.....5
3.1 Safety Symbols & Decals.....6-7
3.2 Skid Loader Requirements.....8
3.3 Personal Protective Equipment.....8
3.4 Federal Law & Regulations.....8
3.5 Safety Instructions.....9

SECTION 4 OPERATING PROCEDURES
4.0 Unpacking Your Concrete Claw.....10
4.1 Pre-Operating Checklist.....10
4.2 How To Connect Attachment 10-11
4.3 Operating Guidelines.....12
4.4 How To Disconnect Attachment.....12

SECTION 5 MAINTENANCE PROCEDURES
5.0 Maintenance Overview.....13
5.1 Maintenance Log Instructions.....14
5.2 Storage Tips.....14
5.3 Tooth Removal & Replacement.....15

SECTION 6 TROUBLESHOOTING
6.0 Troubleshooting Chart.....16

SECTION 7 PARTS INFORMATION
7.0 Concrete Claw Parts Diagram.....17

SECTION 8 WARRANTY INFORMATION
8.0 Warranty Statement.....18-19
8.1 Warranty Return Authorization Policy.....19
8.2 Warranty Procedure.....20

SECTION 9 SAFETY ACKNOWLEDGMENT & MAINTENANCE LOG
9.0 Safety Acknowledgment & Maintenance Log.....21

WARNING: This product can expose you to chemicals including benzene and mineral oils, which are known to the State of California to cause cancer. For more information, go to www.P65Warnings.ca.gov.

Disclaimer: Any critical changes made to this manual by individuals outside the manufacturer's authorized personnel are doing so at their own risk. The manufacturer cannot be held legally responsible for any consequences, damages, or liabilities resulting from such modifications. It is advised to adhere strictly to the original manual provided by the manufacturer for optimal performance, safety, and reliability.

SECTION 2

CONCRETE CLAW SPECIFICATIONS

Concrete Claw



Concrete Claw Specs

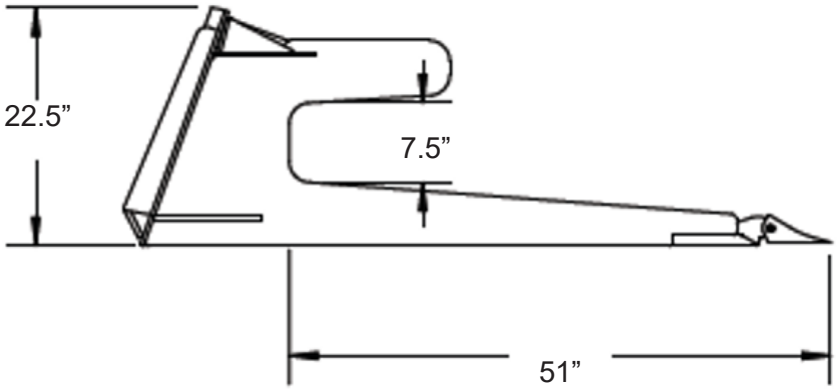

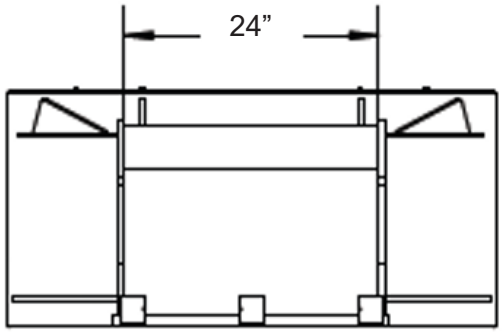

SECTION 3

SAFETY AND OPERATION

The following terms may be used interchangeably throughout this manual.

Term	Alternate Terms Used
Concrete Claw	implement, attachment, product
Machine	skid steer loader, tractor, loader, prime mover, host machine, skid steer
Operator	user, personnel

This **Concrete Claw** is designed and manufactured with safety in mind. However, improper use and operator error can result in death or serious injury. It is important that you read and fully understand the safety instructions and operating procedures presented in this manual before operating this attachment. Accident prevention is a combination of good judgment, common sense, awareness and proper training!

⚠ BEFORE YOU OPERATE THIS CONCRETE CLAW:

KNOW how to safely operate your machine.

READ and UNDERSTAND the safety instructions and operating procedures contained in this manual.

ACKNOWLEDGE your understanding of all safety instructions presented in this manual by signing the “Safety Acknowledgment Form” at the end of this manual.

Although every effort has been made to ensure a safe product, every possible circumstance that could pose a potential hazard cannot be anticipated. The warnings presented in this manual and on this product, are therefore not all-inclusive.

In addition to the safety messages presented in this section, you must also read and understand the safety messages presented in the other sections of this manual.

3.1 SAFETY SYMBOLS & DECALS

This manual and the decals on this attachment use safety symbols, hazard labels, pictograms and color coded signal words to alert you to potential hazards that may cause severe injury or death if a safety instruction is ignored.



SAFETY ALERT SYMBOL - This symbol is used to alert you to potential personal injury hazards. Obey all safety messages that follow this symbol to avoid possible injury or death.

HAZARD CLASSIFICATIONS

Hazards are identified by the "Safety Alert Symbol" and followed by the signal word "DANGER", "WARNING", or "CAUTION".

DANGER

Indicates an imminently hazardous situation which, if not avoided, will result in death or serious injury. This signal word is limited to the most extreme situations.

WARNING

Indicates a potentially hazardous situation which, if not avoided, could result in death or serious injury.

CAUTION

Indicates a potentially hazardous situation which, if not avoided, may result in minor or moderate injury.

NOTICE

Indicates a situation which may cause damage to equipment or property. Messages are not related to personal injury.

Safety Instructions

Indicates specific safety-related instructions or procedures.

Pictogram	Description
	**OPERATING MANUAL**: Operators must read and understand the safety instructions in the operating manual to prevent death or serious injury.
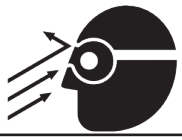	**EYE PROTECTION & CARDBOARD**: Operators and Maintenance personnel must wear proper eye protection and use cardboard or wood to investigate hydraulic leaks to prevent death or serious injury from being injected with high pressure hydraulic fluid.
	**HIGH PRESSURE FLUID INJECTION HAZARD**: Operators and Maintenance personnel must not place fingers or hands directly over a hydraulic leak to prevent death or serious injury from being injected with high pressure hydraulic fluid.
	**NO BYSTANDERS**: DO NOT operate this attachment near bystanders. Bystanders must stay back at least 300 feet from the attachment to prevent death or injury from objects being thrown.
	**CRUSH HAZARD**: DO NOT place any part of the body under the attachment or machine to prevent death or serious injury from being crushed .

3.1 SAFETY SYMBOLS & DECALS

The safety decals affixed to this attachment are to keep you safe. DO NOT ignore these decals.

Read and understand each decal's safety message. Follow these Safety Decal Instructions:

WHEN ORDERING, CHOOSE THE PROPER DECAL FOR YOUR MODEL

REF	DESCRIPTION	LABEL	QTY
1	DANGER-Falling Object/ Crushing Hazard		1
2	WARNING: Read Manual		1

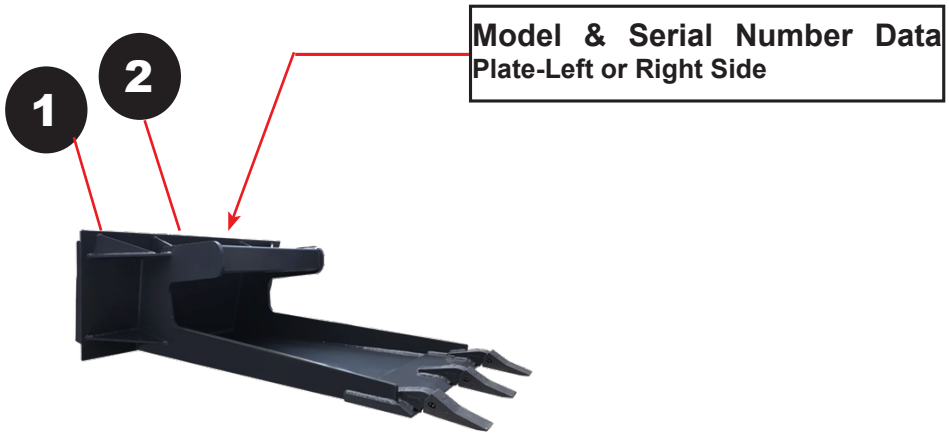

CONTACT YOUR LOCAL DEALER TO ORDER REPLACEMENT DECALS

⚠ **Decals must be kept clean and legible at all times.**

⚠ **Operators must inspect the attachment for safety decals.**

⚠ **Replace missing, worn or damaged decals immediately.**

⚠ **When using a hot pressure washer to clean this attachment make sure water jet is not too close to the decal as this may cause the decal to peel.**

⚠ **When replacing parts, be sure safety decals are in place prior to using the attachment.**

⚠ **Make sure metal surface is dry and free of dirt and grease before affixing decals to this attachment.**

3.2 SKID STEER LOADER REQUIREMENTS

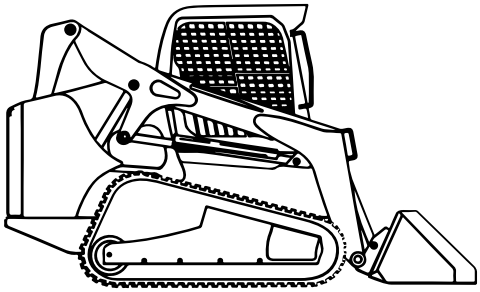

Tracked

VS.



Wheeled

A Tracked Skid Steer or Compact Track Loader (CTL) will provide superior stability in this application.

⚠ CAUTION

Make sure your machine is in good operating condition. Follow the operating instructions found in the operator's manual. Failure to do so could result in minor or serious injury.

Consult the host machine's rated operating capacity to ensure you have the proper lift capacity for optimal operation of your attachment.

3.3 PERSONAL PROTECTIVE EQUIPMENT (PPE)

All operators should wear hearing protection, safety glasses, hand protection and dust mask while operating this attachment.



3.4 FEDERAL LAWS & REGULATIONS

OSHA REGULATIONS

Current OSHA regulations state in part: "At the time of initial assignment and at least annually thereafter, the employer shall instruct every employee in the safe operation and servicing of all equipment with which the employee is, or will be involved." These will include (but are not limited to) instructions to:

Keep all guards in place when the machine is in operation;

Permit no riders on equipment;

Stop engine, disconnect the power source, and wait for all machine movement to stop before servicing, adjusting, cleaning, or unclogging the equipment, except where the machine must be running to be properly serviced or maintained, in which case the employer shall instruct employees as to all steps and procedures which are necessary to safely service or maintain equipment.

Make sure no one is within 300 feet of machinery before starting the engine, engaging power, or operating the machine.

3.5 GENERAL SAFETY INSTRUCTIONS

MAKE SURE YOU FOLLOW THE GENERAL SAFETY INSTRUCTIONS THAT RELATE TO THE OVERALL OPERATION AND MAINTENANCE OF THIS ATTACHMENT. IT IS IMPORTANT THAT YOU READ AND UNDERSTAND EACH OF THESE MESSAGES TO PREVENT SERIOUS INJURY OR DEATH.

- NEVER use drugs or alcoholic beverages while operating or servicing this attachment.
- ALWAYS operate this attachment during daylight or well-lit areas.
- We recommend using a high strength clear protective door panel when using with this attachment.
- To prevent the machine and attachment from rolling forward, stop the engine and set the parking brake when exiting the machine.
- Inspect attachment for loose or missing hardware prior to using this machine.
- DO NOT allow children to play on or around this attachment at any time. Store this attachment in an area not frequented by children.
- ALWAYS wear the proper personal protection equipment while operating or servicing this attachment. NEVER operate or service this attachment with bare feet, sandals, or other light footwear.
- ALWAYS wear work gloves when handling this attachment to protect your hands.
- ALWAYS use eye protection while operating or servicing this attachment.
- ALWAYS watch for overhead power lines.
- DO NOT place any part of your body under this attachment.
- NEVER operate this attachment when bystanders are within 20 feet of your work area.
- NEVER position your body or limbs under an unsupported attachment.
- DO NOT allow this attachment to contact buildings, utilities, large rocks or tree stumps or you may lose control of the machine.
- DO NOT operate this attachment during lightning or severe weather conditions.
- DO NOT allow riders on the machine or on this attachment.
- ALWAYS call 811, the “Digger’s Hotline” before digging to identify underground utilities to avoid an accident that could result in Death or Serious Injury to the operator.
- DO NOT speed! Speed Kills! Keep your driving speed between 2 and 5 mph.

SECTION 4

OPERATING PROCEDURES

Your attachment may arrive from the factory strapped to a wood pallet and requires no final assembly. Use a steel band cutting tool to remove the steel straps.

⚠ CAUTION

Shipping straps are under great tension, and could lash out uncontrollably when cut causing injuries to your body or bystanders. Keep bystanders away and wear safety glasses and gloves while removing the steel straps.

4.1 PRE-OPERATING CHECKLIST

Pre-Operating Checklist	
☐	Attachment is securely attached to the machine and pins are locked.
☐	Safety labels are present and legible.
☐	No material, rope, wire, etc. is obstructing the machine or attachment
☐	The area of operation is clear of bystanders and any obstacles that could damage the equipment or injury to the operator.
☐	The operator is of good health and not under the influence of any mind altering substances or alcohol.
☐	Check the machine's hydraulic fluid level and add manufacturer recommended fluid if necessary.

4.2 HOW TO CONNECT CONCRETE CLAW

⚠ DANGER

NEVER enter the area underneath the coupler or any part of the attachment when it is in the raised position to avoid an accident that will result in Death or Serious Injury!

GENERAL ATTACHMENT METHOD

Refer to your machine's manual for specific instructions on how to connect and disconnect your attachment.

4.2 HOW TO CONNECT CONCRETE CLAW

This attachment method refers specifically to skid steers. For all other attachment instructions, refer to the Original Equipment Manufacturer (OEM) for instructions.

1. Make sure the locking pins on the skid steer quick attach mechanism are in the unlocked position.
2. Drive the skid steer to the attachment plate and tilt the skid steer coupler forward and hook the top edge of the skid steer quick attach mechanism under the lip of the attachment plate. See figure 4.2a below.
3. Slowly raise and tilt back the skid steer mounting plate, moving upward until the attachment plate is flat against the skid steer quick attach mechanism. See figure 4.2a below.

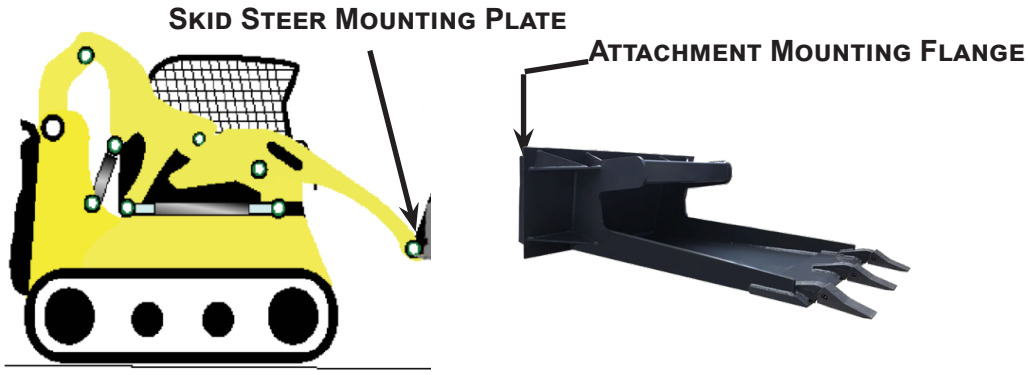

FIGURE 4.2A – SKID STEER MOUNTING PLATE TO ATTACHMENT MOUNTING FLANGE

4. Activate your skid steer's lever lock switch to engage and lock the pins into the flange slots of the concrete claw attachment plate. If your skid steer does not have this switch, push the latch handles down until you can see the lock pins extend into the attachment flange as shown in Figure 4.2b below.

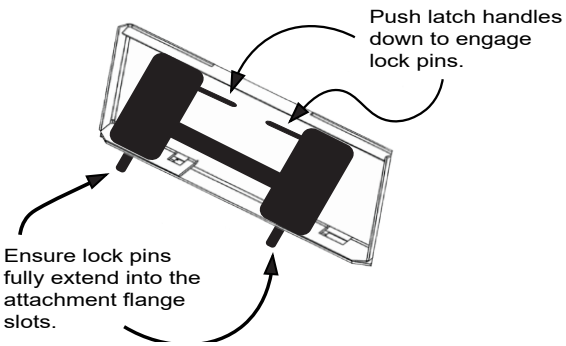

FIGURE 4.2B QUICK ATTACH COUPLER LOCKED TO ATTACHMENT PLATE

⚠WARNING

To avoid serious injury or death, ensure coupler pins fully extend through the slots on the attachment bracket and that levers are down in the locked position to prevent attachment from detaching from machine.

4.3 OPERATING GUIDELINES

⚠ DANGER

To prevent death from electrocution, NEVER operate this attachment near electrical wires or cables.

1. ALWAYS inspect the work area before starting the job. Locate and mark any utilities (also turn utilities off), steel posts, rocks or any other objects that could be damaged or could damage this attachment during operation.

2. NEVER assume the work area is safe and skip the inspection before start of operation.

3. Operate at a safe slow-paced speed that will allow you to watch the area ahead and behind the attachment and machine.

4. VERIFY that your back-up alarm and/or camera are working properly to warn others when you are in reverse, but NEVER think that the alarm or camera replaces your responsibility to visually check what is behind you.

5. Attachment control is the most important element to getting a good steady work flow. Overloading the attachment will only result in spinning the tracks or tires and will make unwanted ruts.

6. If you lift or push too heavy of a load with your attachment, you may further reduce your tractive power or cause unstable lifting or moving conditions.

7. Before beginning your forward motion with your attachment, stop the machine and make any final adjustments to the attachment for angle and height.

8. When using your attachment, make sure that you can visually see your attachment. Beware of pushing or pulling down any type of structure in which you cannot visually see the process.

9. Keep your machine and attachment away from any type of utility, whether underground or in the air.



4.4 HOW TO DISCONNECT ATTACHMENT

1. Park machine on a flat and level surface then lower attachment to the ground.

2. Set parking brake and disengage lock pins using the lock lever switch (if installed skip steps 3-5).

3. Turn off machine engine.

4. Pull latch handles to disengage lock pins.

5. Re-enter cab and start machine engine.

6. Tilt mounting coupler forward until Quick Attach Coupler is free from mounting bracket.

7. Drive machine backward to clear attachment.



SECTION 5

MAINTENANCE PROCEDURES

The maintenance procedures described in this manual should only be carried out by qualified mechanics who have been trained to repair this attachment.

Some procedures require special tools and skills to complete. DO NOT attempt to repair or perform service work on this attachment unless you have the skills and tools to do so. Contact your local dealer for maintenance and repair services.

⚠WARNING

Only use genuine Original Equipment Manufacturer (OEM) replacement parts on this attachment. We will not be liable for any damages or injuries caused by the use of after market parts on this attachment.

NOTICE

Improper maintenance or modifications to the design or performance of this attachment will void the warranty. **ONLY use genuine OEM replacement parts on this attachment.**

Safety Instructions

Obey the following safety instructions when servicing or repairing this attachment.

⚠ **Wear proper Personal Protective Equipment (PPE) while working on this attachment, which may include safety glasses, hard hats, steel toe boots, gloves, etc.**

⚠ **If servicing is performed while the attachment is attached to the machine, turn engine off, set parking brake and chock wheels to prevent machine from moving.**

⚠ **Ensure all jack stands, lifts and hoists are in good working condition and have the rated load capacity to support the load.**

⚠ **Only perform service work in a well-lit area.**

⚠ **Allow the attachment to cool down before servicing this attachment.**

⚠ **NEVER work under an unsupported attachment.**

⚠WARNING

Hazardous dust can be generated if painted surfaces are heated or welded and could result in Death or Serious Injury. Remove paint before welding and always make repairs in a well-ventilated area and wear an approved respirator.

5.1 MAINTENANCE LOG INSTRUCTIONS



MAINTENANCE LOG

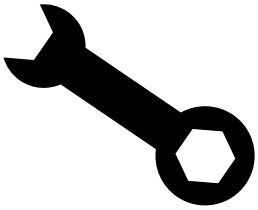

Use the log sheets on at the end of this manual to document all routine maintenance and repair services performed on this attachment.

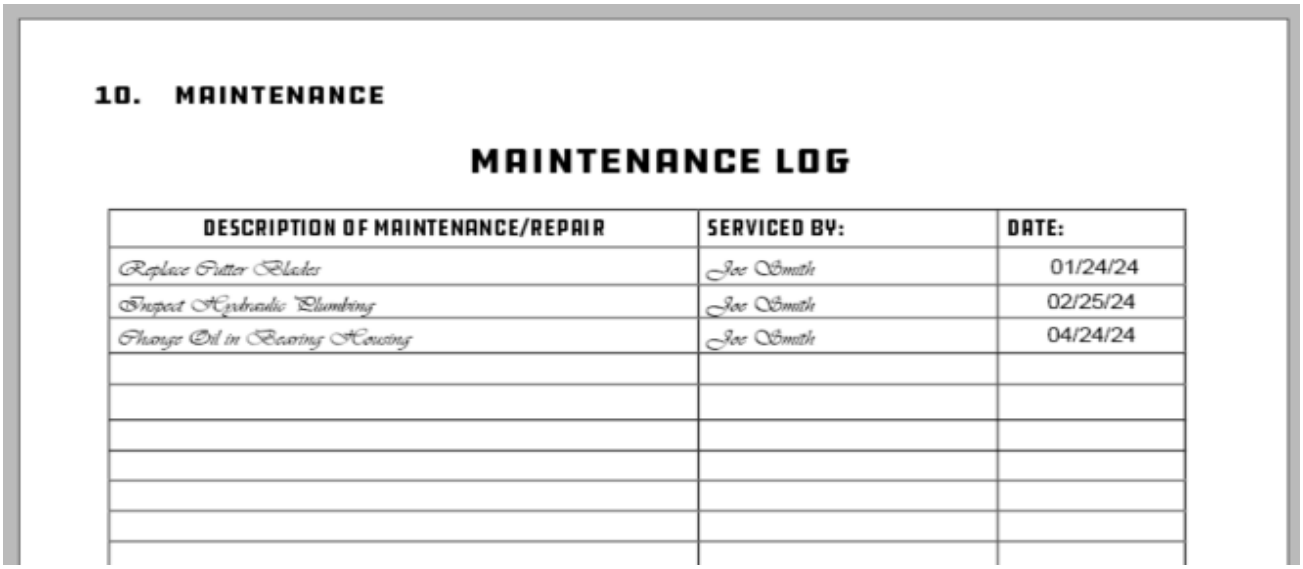

10. MAINTENANCE

MAINTENANCE LOG

DESCRIPTION OF MAINTENANCE/REPAIR	SERVICED BY:	DATE:
Replace Cutter Blades	Joe Smith	01/24/24
Inspect Hydraulic Plumbing	Joe Smith	02/25/24
Change Oil in Bearing Housing	Joe Smith	04/24/24

⚠ DANGER

ONLY service the attachment on stable, even terrain. NEVER park on sloped terrain to avoid being struck & killed or seriously injured by the unexpected rolling or movement of the machine.

5.2 STORAGE TIPS

	Ensure attachment is free of water, debris, dirt and grease.
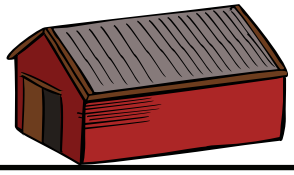	Store your attachment in a dry shed or garage.
	When storing your attachment for the season, cover with a weather proof tarp to protect it from the elements.

5.3 TOOTH REMOVAL & REPLACEMENT

DANGER

NEVER enter the area underneath the coupler or any part of the attachment when it is in the raised position to avoid an accident that will result in Death or Serious Injury!

WARNING

Hazardous dust can be generated if painted surfaces are heated or welded and could result in Death or Serious Injury. Remove paint before welding and always make repairs in a well-ventilated area and wear an approved respirator.

Bolt-on tooth replacement can be completed safely with proper torque values applied.

Weld-on tooth replacement is not a task for most machinery operators and should be referred to a welding shop that possesses the proper equipment, knowledge, and experience.

Replacement teeth are available from the manufacturer.

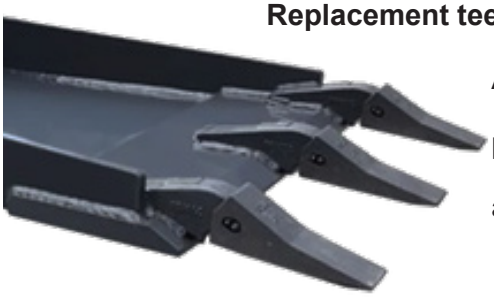

Attaching a tooth to your existing concrete claw is a simple process that requires appropriate tools, and should include a pin to secure the tooth.

CAUTION Teeth are heavy and could cause Minor or Serious Injury if mishandled. ALWAYS wear protective gloves and footwear.

WELDING REPAIRS

Welding on attachments must be performed by certified welders who have requested and obtained written approval from an authorized representative of the manufacturer before welding begins.

All authorized welding repairs must be performed by qualified welders in accordance to the American Welding Society (AWS) standards. Welding procedures performed by unqualified welders may deem this attachment unsafe to operate and **VOID THE WARRANTY**!.

5.4 TOOTH REMOVAL AND REPLACEMENT

1. Remove the retaining pin that holds that tooth onto the shank.
2. Remove worn tooth.
3. Put new tooth in place and place retaining pin in hole to secure the tooth.

NOTICE: Make sure retaining pin is fully seated retaining both sides of the tooth flanges.

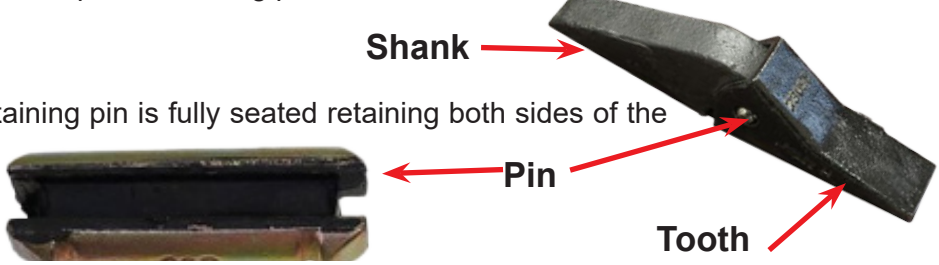

SECTION 6

TROUBLESHOOTING

PROBLEM	POSSIBLE CAUSE	SOLUTION
Cannot lift load	Insufficient power to lift load.	Reduce load on the attachment or switch to a machine that is rated for more lift capacity.
Concrete Claw is not penetrating the ground.	Pin on teeth are broken or missing.	Replace broken and/or missing pin-on teeth.
	Entering the ground on top of large roots.	Approach from a different angle or remove roots.
	Ground has a solid object in it such as a large rock or rebar, etc.	Remove the solid object or approach from a different angle.
Pin-on teeth are not staying on	Tooth pin is damaged.	Replace tooth pin. If not sufficient to retain tooth, use a grade 8 bolt with locknut.
	Tooth pin is not locking in the tooth's slotted holes.	Clean out debris, re-set tooth, and make sure the pin is fully seated.
Tooth pin will not lock in place.	Not driving the tooth pin in properly.	Drive tooth pin into the slotted hole with a hammer until equal amounts of the pin are exposed on each side of the pin-on tooth.
Load is shifting in the concrete claw.	Universal quick attach hitch is not properly attached to attachment's hitch plate.	Always make certain universal quick hitch is properly attached to the Concrete Claw before lifting a load. Reattach quick hitch to the Concrete Claw hitch plate if loose.
	Load is being carried too high.	Recommended carrying height is as close to ground as possible without hitting objects.
	Traveling and/or turning too fast.	Reduce speed to a safe non-bouncing speed and never turn suddenly.
	Traveling sideways on an incline.	Travel straight up and down inclines.
	Load is not centered in Concrete Claw.	Center load on Concrete Claw.

SECTION 7

PARTS INFORMATION

Factory OEM parts specifically designed for your implement are readily available.

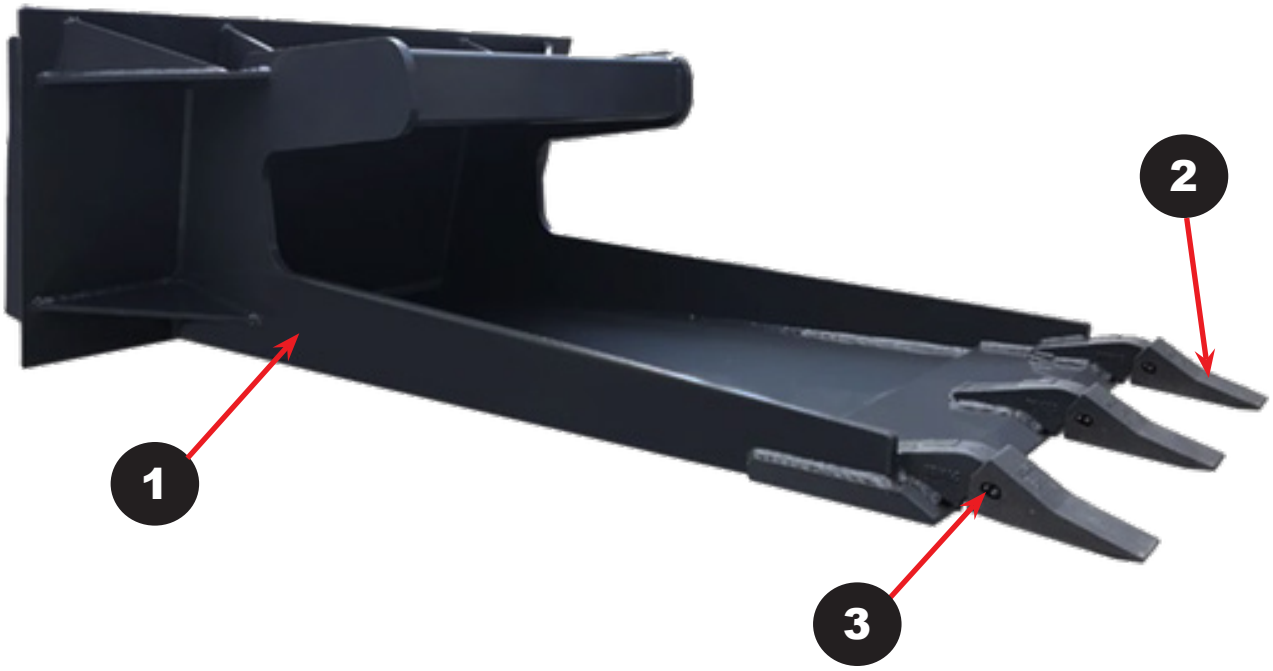

Ref	Part Description	QTY
1	Claw Weldment	1
2	Tooth	3
3	Tooth Pin	3

SECTION 8

WARRANTY INFORMATION

LIMITED WARRANTY

Construction Implements Depot, Inc. (CID) products are warranted to be free from defects in workmanship or materials for a period of 12 months from the initial sale.

WARRANTY EXCLUSIONS

This warranty does not cover normal wear items, including but not limited to: bearings, hoses, blade holders, ground engaging parts such as teeth, blades, cutting edges, pilot bits, auger teeth and broom bristles. This warranty does not cover maintenance, service or adjustments. This warranty does not cover damage due to improper application or installation, misuse, negligence, accidents or improper maintenance. Please note: Any modification or customization made to your attachment may void its warranty. This warranty is void if any components have been disassembled, i.e., pumps, gear boxes or motors or the attachment has been used without the case drain attached (if applicable). Be sure to follow all recommended Horsepower and GPM requirements as outlined in product specifications, in order to prevent the warranty from being void. This warranty is contingent upon the use of approved BRAND parts exclusively. Any use of non-approved parts may result in voiding the warranty. Please be advised that the warranty does not cover refurbished attachments. Specially modified attachments built by the manufacturer to meet your needs shall not be warranted by CID, Inc.

REPAIRS UNDER WARRANTY

Any repairs, including welding, on attachments must be performed by certified repair technicians who have requested and obtained written approval from an authorized representative of CID before repairs begin. If you are completing the repair, you must also have prior written approval to prevent the warranty from being voided.

WARRANTY STATEMENT

Our obligation under this Limited Warranty shall be solely limited to repairing or replacing any part (see non-covered items above) that, according to our judgment, show evidence of a defect in quality of workmanship or

materials for the stated 12 month warranty period. All defective parts must be routed directly to CID, Inc. with freight or delivery charges to be prepaid. This limited warranty shall not be interpreted to render CID, Inc. liable for any injury or damage to persons, businesses or property of any kind nor expenses or losses incurred for labor, supplies, substitute machinery rental or for any other reason. Repair or replacement parts are subject to the supply conditions at the time of repair or replacements, which may directly affect our ability to obtain material and/or replacement parts. CID, Inc. reserves the right to make improvements in design or changes in specifications at any time without incurring any obligations to owners of previously purchased products. No one but CID, Inc. is allowed to alter, modify or enlarge this warranty nor the exclusions, limitations and reservation at any time. CID, Inc. products are warranted to be free from defects in workmanship or materials for a period of 12 months from the initial sale.

Purchaser and Manufacturer hereby (a) submit to the non-exclusive jurisdiction of the courts of competent jurisdiction in North Carolina and Davidson County in which this company resides for resolution of any dispute concerning this Limited Warranty or the rights or obligations of Purchaser and/or Manufacturer; (b) agree that any litigation in connection with this Limited Warranty shall be venued in North Carolina and Davidson County in which the company resides and (c) waive any objection they may have as to any such action or proceeding brought in such court that such court is an inconvenient forum. Nothing herein shall limit the right of Purchaser or Manufacturer (or the right of any permitted successor or assign of either) to bring proceedings against the other in the courts of any other jurisdiction wherein any assets of such other party may be located.

8.1 WARRANTY RETURN AUTHORIZATION POLICY

WARRANTY RETURN AUTHORIZATION POLICY:

If repairs are required, a Return Material Authorization (RMA) number must be obtained for the defective part as well as proof of purchase. RMA and services are rendered by CID only. Any responsibility of shipping costs on any item returned for repair is at the discretion of CID, Inc.

All returned parts must have the following:

1. A legible RMA number written on the outside of the package.
2. Warranty Claim Form (online)
3. The defective part.

RMA numbers are only valid for 30 days from the date of issue. All shipped replacement parts will require a Parts Order (PO) number from the original CID, Inc dealer. Repairs not covered by the warranty, will be charged for parts and labor at the current pricing rate. Should you have any problems with your attachment, please follow the instructions listed on the following page.

8.2 WARRANTY PROCEDURE

WARRANTY RETURN AUTHORIZATION PROCEDURE:

1. Call the Warranty Department at (336) 859-2002 EXT 215. You will need to provide the model and serial number of the defective item(s) (see Appendix for where to find this information), a description of the problem, and have photographs available.

2. Upon a warranted issue, visit www.cidattachments.com, click on the warranty tab, and fill in the warranty information on the Warranty Claim Form. CID, Inc will retain a Return Material Authorization (RMA) number of the defective part. If all the information above is completed CID, Inc will issue a RMA number via email.

3. Once you have an approved RMA number, a shipping label will be provided with CID's address and instructions for returning the defective part. **Appropriate RMA's/PO's will be invoiced and payment received while the evaluation process is being completed to prevent delays in your normal business operations. In the event the defective part(s) is un-warranted and repairs are not covered by the warranty, the customer will be invoiced for any additional parts and labor at the current pricing rate. If the part is deemed under warranty, a credit of the invoice will be issued.**

4. CID will ship a replacement part to the provided location or customer with a RMA identifier of some kind. **The customer is responsible for initial shipping charges until evaluation of the part has been completed.** If the part failure is covered by the warranty, the customer will be reimbursed for any paid shipping charges. In the event, the part is not covered by the warranty, the customer is responsible for return shipping.

5. Once the defective part is warranted by CID, the customer will be issued a credit and the PO number will no longer be active.

6. In the event CID decides that the attachment needs to be returned to them for repair, CID will make arrangements for pickup and return. Repairs will be performed by CID qualified technicians. Non-warranted issues will be discussed, and repairs will be performed upon the owner's agreement and receipt of payment for parts and labor.

SECTION 9

SAFETY ACKNOWLEDGMENT & MAINTENANCE LOG

ATTENTION ALL OPERATORS: Print your name, sign and date in the boxes below to acknowledge that you have read and fully understand the safety instructions presented in this manual, and have been trained on how to safely operate this attachment.

OPERATOR NAME	SIGNATURE	DATE

Document all routine maintenance and repair services performed on this attachment.

DESCRIPTION OF MAINTENANCE/REPAIR	SERVICED BY:	DATE:



TRUSTED ATTACHMENTS

EST. CID 2003

INDUSTRIAL QUALITY

MADE IN THE USA
WITH U.S. AND IMPORTED PARTS

CONSTRUCTION IMPLEMENT DEPOT
DENTON-USA, LLC
1248 N. MAIN ST
DENTON, NC 27239

WWW.CIDATTACHMENTS.COM

CIDCC-MANU-V3M0826