grecian delight KRONOS Together, Serving Up World Flavors.	FINISHED PRODUCT SPECIFICATION	
	Document:	Research and Development
Effective Date: 05/11/2022	**Program:**	Specification Program
Revised By: *Nancy Zuniga*	**Location:**	**TONNE/GDF**
Approved By: *Nick Spondike, Chief Innovation Officer*		

Item Name: *1 oz GDF HALAL FALAFEL FRITTER Uncooked IQF Puck* **Item Number:** *SA000011*

PIECE WEIGHT	
1 oz	(+/- 0.15 oz)

ITEM DESCRIPTION

Authentic Falafel recipe featuring chickpeas, parsley, onions, cilantro, garlic and spices. Gluten Free ; Vegan recipe and free of artificial colors, flavors and preservatives.

Color: Beige with flecks of herbs and very small pieces of garbanzo beans

Appearance: Wet and sticky to the touch, like stuffing

Cooked Texture: Crunchy outside. Soft, somewhat moist inside but granular.

ITEM PACKAGING

Primary Packaging:	Plain Plastic Bags no inner label	**Primary Case Type:**	INK JETTED LABEL
Cases Per Pallet:	72 Cases per pallet	**No. of Bags / Case:**	4/4 lb Bags
Rows Per Pallet (Hi):	8 Cases High	**Case Gross Wt. (lbs):**	17.00 lbs
Cases Per Row (Ti):	9 Cases Per Row	**Case Gross Wt. (kg):**	7.7 kg
Case Dimensions (Inches):	16.94 x 11.06 x 7.50 in.	**Case Net Wt. (lbs):**	16.00 lbs
UPC Code Number:	0-75365-00092-7	**Case Net Wt. (kg):**	7.3 kg
SEC / ITF / GTIN Number:	1-00-75365-00092-4	**Cases Cube (Cu. Ft.):**	0.810 Cu. Ft.
Pallet Weight (lb & kg):	1289 lbs (584 kg)	**Pallet Pattern Height (In.):**	65.00 in.

STORAGE & SHELF LIFE & CODE DATE FORMAT

Storage Conditions:	FROZEN (0°F)	**Distributed:**	FROZEN (0°F)
Shelf Life from Production:	FROZEN (0°F) : **6 MONTHS** **(180 DAYS)**	**CASE Code Date Format:**	Shipping Container Video Jet 1 Digit Year + Julian Date

Certified Kosher	Certified Halal	Certified Organic	Certified CN
YES	YES	NO	NO

INGREDIENT STATEMENT

INGREDIENTS:

CHICKPEAS, WATER, PARSLEY, ONIONS, CILANTRO, SERRANO PEPPERS, GARLIC PUREE (GARLIC, CITRIC ACID), CONTAINS 2% OR LESS OF: SALT, SPICES, RICE FLOUR, XANTHAN GUM.

grecian delight KRONOS Together, Serving Up World Flavors.	FINISHED PRODUCT SPECIFICATION	
	Document:	Research and Development
Effective Date: 05/11/2022	**Program:**	Specification Program
Revised By: *Nancy Zuniga*	**Location:**	**TONNE/GDF**
Approved By: *Nick Spondike, Chief Innovation Officer*		

NUTRITIONALS PER SERVING SIZE

Recommend Serving Size: 3 Pieces (85g)
Servings Per Container: Approx. 85

Nutrition Facts

85 servings per container

Serving size **3 pieces (85g)**

Amount per serving

Calories **140**

	% Daily Value*
Total Fat 2g	**3%**
Saturated Fat 0g	**0%**
Trans Fat 0g	
Cholesterol 0mg	**0%**
Sodium 420mg	**18%**
Total Carbohydrate 23g	**8%**
Dietary Fiber 9g	**32%**
Total Sugars 4g	
Includes 0g Added Sugars	**0%**
Protein 7g	
Vitamin D 0mcg	0%
Calcium 54mg	4%
Iron 2mg	10%
Potassium 310mg	6%

*The % Daily Value tells you how much a nutrient in a serving of food contributes to a daily diet. 2,000 calories a day is used for general nutrition advice.

Calories per gram:
Fat 9 • Carbohydrate 4 • Protein 4

Nutrient Content Claims Per Serving Size:

Low Fat
Low Saturated Fat
Low Cholesterol
High Fiber
Good source of Zinc
Good source of Iron

ALLERGENS AND OTHER SENSITIVE INGREDIENTS

	Column I	Column II	Column III
ALLERGEN	**Present in the Product**	**Present in other products manufactured on the same line**	**Present in the same manufacturing plant**
Peanut	NO	NO	NO
Tree Nuts	NO	NO	NO
Milk and Dairy Products	NO	NO	**YES**
Eggs	NO	NO	NO
Fish	NO	NO	NO
Shellfish and Molluscs	NO	NO	NO
Soy	NO	NO	**YES**
Wheat	NO	NO	**YES**
SESAME SEEDS	NO	NO	**YES**
Monosodium Glutamate (MSG)	NO	NO	**YES**

grecian delight KRONOS Together, Serving Up World Flavors.	FINISHED PRODUCT SPECIFICATION	
	Document:	Research and Development
Effective Date: 05/11/2022	**Program:**	Specification Program
Revised By: *Nancy Zuniga*	**Location:**	**TONNE/GDF**
Approved By: *Nick Spondike, Chief Innovation Officer*		

NUTRITIONALS VALUES (100g UNROUNDED)

Product: **1 oz GDF HALAL FALAFEL FRITTER Uncooked IQF Puck** ***GENESIS EFFECTIVE DATE: 05/11/22***

Nutrients	Per 100g	Nutrients	Per 100g	Nutrients	Per 100g	Nutrients	Per 100g
Basic Components		Trans Fatty Acid (g	0.00	Vitamin B12 (mcg)	0.00	Magnesium (mg)	33.64
Gram Weight (g)	100.00	Cholesterol (mg)	0.00	Biotin (mcg)	0.00	Manganese (mg)	0.02
Calories (kcal)	199.81	Water (g)	49.41	Vitamin C (mg)	9.30	Molybdenum (mc	0.00
Calories from Fat (kcal)	67.32	Ash (g)	0.00	Vitamin D - IU (IU)	0.00	Phosphorus (mg)	315.58
Calories from SatFat (kcal)	9.01	Insoluble Fiber (g)	0.00	Vitamin D - mcg (m	0.00	Potassium (mg)	338.65
Protein (g)	8.13	**Vitamins**		Vitamin E - Alpha-Toco (mg)	0.00	Selenium (mcg)	0.00
Carbohydrates (g)	26.26	Vitamin A - IU (IU	421.48	Folate (mcg)	10.36	Sodium (mg)	725.27
Dietary Fiber 2016	10.27	Vitamin A - RE (R	0.00	Folate, DFE (mcg)	0.00	Zinc (mg)	1.01
Soluble Fiber 2016	0.17	Vitamin A - RAE (RAE)	0.18	Vitamin K (mcg)	0.00	Chloride (mg)	0.00
Total Sugars (g)	4.33	Carotenoid RE (RE	0.36	Pantothenic Acid (m	0.00	**Poly Fats**	
Added Sugars (g)	0.00	Retinol RE (RE)	0.00	**Minerals**		Omega 3 Fatty Ac	0.00
Disaccharides (g)	0.00	Beta-Carotene (mc	2.16	Calcium (mg)	86.49	Omega 6 Fatty Ac	0.00
Other Carbs (g)	0.14	Vitamin B1 (mg)	0.01	Chromium (mcg)	0.00	**Other Nutrients**	
Fat (g)	7.56	Vitamin B2 (mg)	0.01	Copper (mg)	0.01	Alcohol (g)	0.00
Saturated Fat (g)	1.00	Vitamin B3 (mg)	0.01	Fluoride (mg)	0.00	Caffeine (mg)	0.00
Mono Fat (g)	3.73	Vitamin B3 - Niacin Equiv (mg)	0.00	Iodine (mcg)	0.00	Choline (mg)	1.33
Poly Fat (g)	0.62	Vitamin B6 (mg)	0.01	Iron (mg)	2.41	Sugar Alcohol (g)	0.00

VIDEOJET LABEL

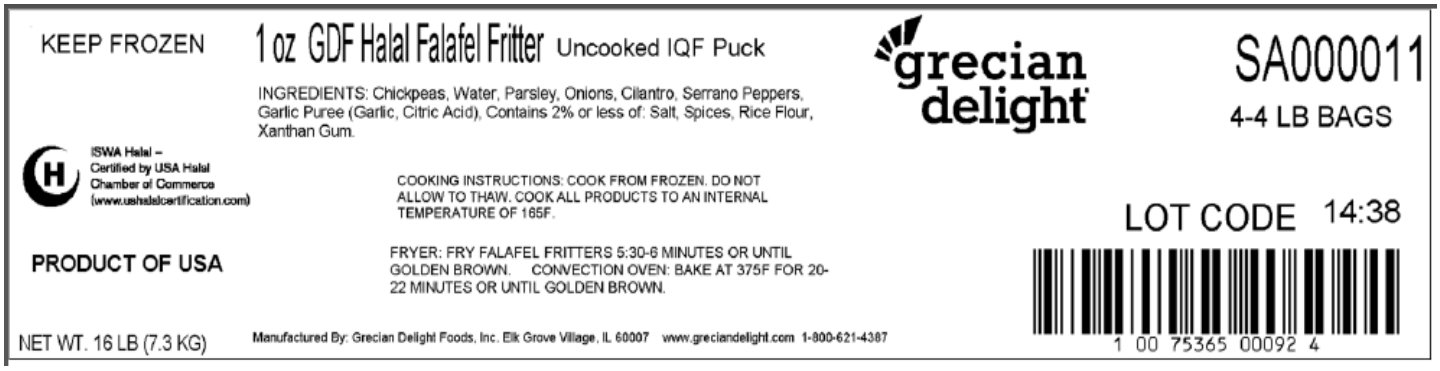

COOKING INSTRUCTIONS: COOK FROM FROZEN. DO NOT ALLOW TO THAW. COOK ALL PRODUCTS TO AN INTERNAL TEMPERATURE OF 165F.

FRYER: FRY FALAFEL FRITTERS 5:30 - 6 MINUTES OR UNTIL GOLDEN BROWN. CONVECTION OVEN : BAKE AT 375F FOR 20-22 MINUTED OR UNTIL GOLDEN BROWN.

grecian delight KRONOS Together, Serving Up World Flavors.	**FINISHED PRODUCT SPECIFICATION**	
	Document:	Research and Development
Effective Date: 05/11/2022	**Program:**	Specification Program
Revised By: *Nancy Zuniga*	**Location:**	**TONNE/GDF**
Approved By: *Nick Spondike, Chief Innovation Officer*		

PALLET PATTERN

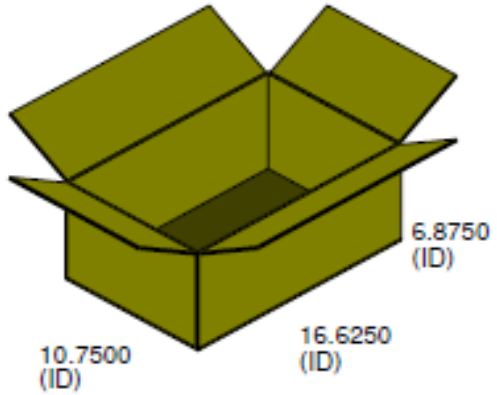

GMA (Notched) 48.000x40.000x5.000
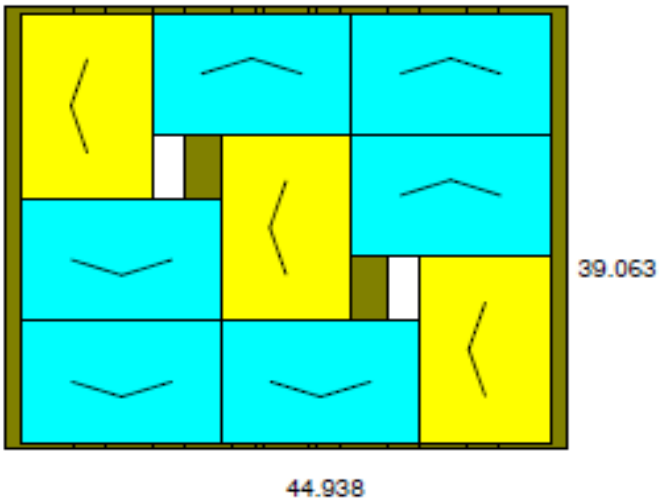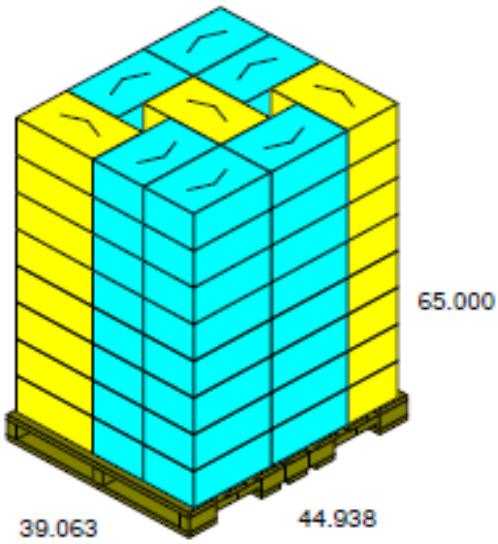
	Shipper (ID)	Shipper (OD)	UnitLoad (Incl. Pal)
Ln:	16.6250 in	16.9375 in	44.938 in
Wd:	10.7500 in	11.0625 in	39.063 in
Ht:	6.8750 in	7.5000 in	65.000 in
Net:		0.00 lb	0.00 lb
Grs:		0.00 lb	65.00 lb
Cube:	0.711 ft3	0.813 ft3	66.030 ft3
		Height Vert	
Prod.Vol:	0.000 in3		0.000 ft3
Shipper:			72
Area Efficiency:		0.0 %	87.8 %
Cubic Efficiency:		0.0 %	81.1 %
Prod.Eff:	0.0 %	0.0 %	0.0 %
Cases per layer:			9
Layers/load:			8
Pattern:			Diagonal
RSC Area:		7.22 ft2	520 ft2
Density (gr/cc):			0.0000
Max UL High:			4
Clamp Direction:			N/A