Tridak Model 1001 User Guide

Syringe Filling System

- Instructions for Safe Use
- Setup and Operation
- Maintenance
- Ordering Spare Parts and Accessories

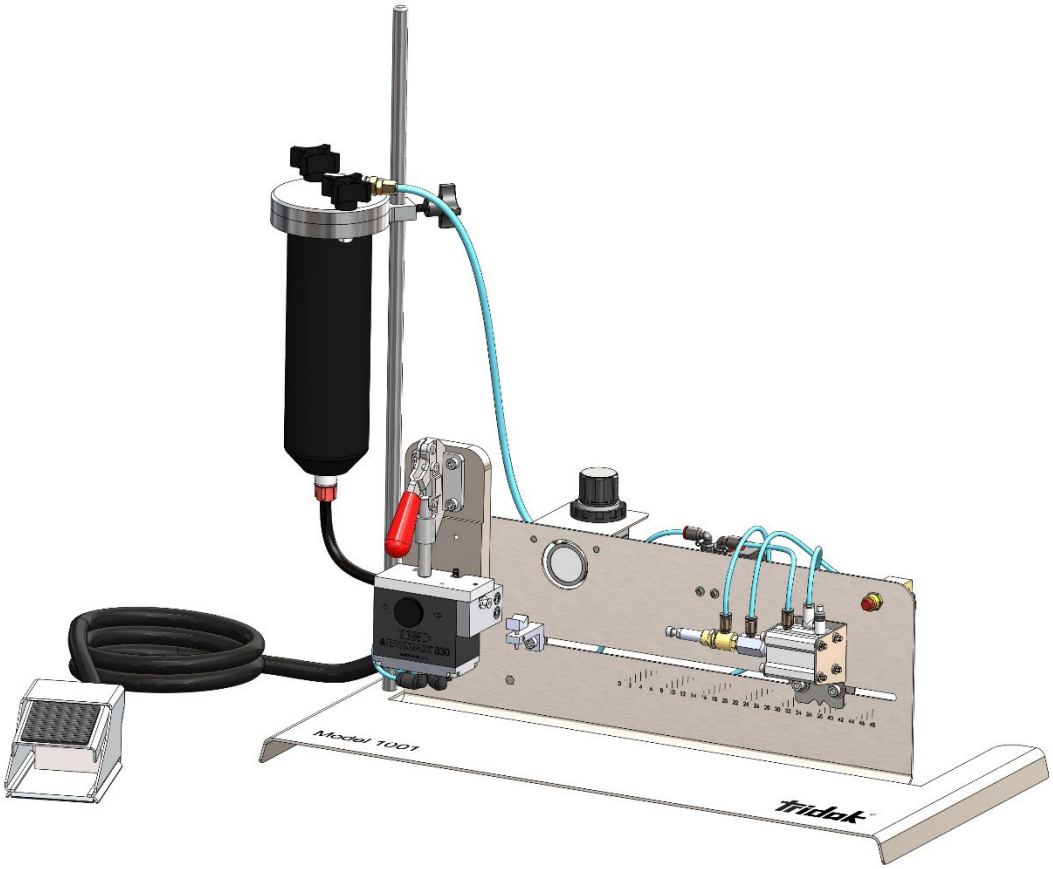

TRIDAK

About Tridak

Systems for fluid packaging.

Tridak manufactures fluid packaging systems for a variety of industries including industrial, medical, dental, pharmaceutical, and food preparation. Tridak's filling systems for syringes and cartridges provide significant productivity gains over manual and other more complicated and costly filling methods. The equipment is suited for all industry standard packaging as well as custom molded syringes and cartridges. Tridak possesses the capability to fabricate nozzles and multi-port dispensing manifolds that perfectly match the packages being filled. Single- and dual-component materials can be packaged in seconds, one at a time, or in multiples for higher volume throughput. The equipment accommodates various mix ratios. High-pressure filling equipment is available for packaging highly filled materials in tiny syringes or compoules.

Please note that most filling system applications are unique. Tridak does not warrant the fitness of the product for the intended application. Any warranty applicable to the product, its application and use is strictly limited to that contained in the Tridak standard Conditions of Sale. Tridak recommends that any intended application be evaluated and tested by the user to insure that desired performance criteria are satisfied. Tridak is willing to assist users in their performance testing and evaluation. Data sheets are available for pressure pots upon request.

Contents

Introduction **4**
Introduction to the User Guide 4
Intended Audience 4
Where to Get Help 4
Safety **4**
General Safety Considerations 4
Specific Safety Considerations 4
Personal Protective Equipment 5
Product Overview **5**
Description of the Model 1001 Syringe Filling System 5
Special Features and Benefits of the Model 1001 5
Description of Main Components 6
Assembly and Setup **7**
Unpacking and Inspecting Your Shipment 8
Parts Included in the Model 1001 Syringe Filling System 8
Utilities Required 8
Preparing the System for Use **9**
Installing the Reservoir Support 9
Installing the Material Reservoir 9
Connecting the Material Reservoir Pressure Supply Tube 10
Operation **10**
Preparing the Cartridge 11
Loading the System 12
Pressurizing the System 14
Depressurizing the System 15
Adjusting the Syringe Rest 15
Setting the Fill Amount for the Syringe Size 15
Priming the System 16
Preparing the Syringes 17
Filling the Syringe 17
Model 830 Valve Adjustments 17
Cleaning and Maintenance **18**
System Cleaning 18
Spare Parts and Accessories **18**
Specifications **19**
Index **20**

Introduction

Introduction to the User Guide

This guide describes how to assemble, use, and maintain the Model 1001 Syringe Filling System safely and efficiently.

Intended Audience

We prepared this user guide for experienced process engineers, technicians, and manufacturing personnel. If you are new to filling systems and do not understand the instructions, contact Tridak Application Engineering to answer your questions before using the equipment.

Where to Get Help

Additional resources are available to ensure a trouble-free experience with our products:

- Detailed product information on www.tridak.com
- Customer Support and Engineering teams are available in the United States, Monday through Friday, from 8:00 a.m. to 5:30 p.m. Eastern Standard Time. You can also email us at info@tridak.com. Please see the back cover of this user guide for worldwide contact information.

Safety

WARNING! *If you use this filling system without first reading and understanding the information in this user guide, injury can result. To reduce the risk of injury, read and ensure you understand the information in this user guide before assembling and operating a Tridak filling system.*

General Safety Considerations

All users of Tridak equipment should read and understand this user guide before assembling and using the equipment.

Specific Safety Considerations

Using Safe Operating Pressures

Pressurizing the components in the dispensing system beyond the maximum recommended pressure can result in the rupturing of components and serious personal injury. To minimize the risk of rupturing components and injury, do not exceed the maximum operating pressure of the components in your filling system.

Preventing Injection Injury

Discharging fluids or compressed air with a dispensing tip against your skin can cause very serious injection injury. To minimize the risk of injection injury, do not place the dispensing tip in contact with your skin.

Personal Protective Equipment

Operators are recommended to wear any personal protective equipment specified by their company's safety policy for the materials used during filling. Personal protective equipment should be in place and used at all times before pressurizing the system and when handling any potentially hazardous materials.

Product Overview

Description of the Model 1001 Syringe Filling System

The Model 1001 Syringe Filling System is designed to quickly fill piston and/or plunger-style syringes, one at a time, quickly and accurately from a material reservoir. The system can be used with several different material reservoirs including cartridge reservoirs, bottle reservoirs, and pail reservoirs. The system utilizes a Model 830 Disposable Fluid Path Valve to make material changeover fast and easy, while eliminating most cross-contamination. The disposable fluid path can be fitted with a series of adapters to fill Luer-Lock and Oral tip syringe types.

Special Features and Benefits of the Model 1001

This machine features several design features to make filling simple, quick and clean, including:

- Disposable fluid path valve with disposable wetted parts that eliminate material contamination and minimize clean-up and maintenance
- Disposable fluid path can be capped and remain attached to the material cartridge for storage
- Adjustable suck-back feature allows for a clean dispense of stringy and tacky materials
- Material reservoir pressure regulator to control the reservoir pressure used for filling
- Fills various syringes including 0.5, 1, 3 and 5 ml (up to 60 ml) syringes with pre-inserted plunger; tooling nozzles are available for both Luer-Lock or Oral tips.
- Adjustable pneumatic stop assures accurate fills and provides automatic shut-off
- Foot-switch for hands-free, one-touch, fill cycle activation
- Quick clamp design for fast and easy material changeover
- Small footprint; dimensions (L x W x H) – 24 in x 12 in x 26 in (60.96 cm x 30.48 cm x 66.04 cm)

Description of Main Components

The main components in the Model 1001 Syringe Filling System include:

1. **Air Regulator** – The air regulator enables precise control of the air pressure in the fluid reservoir. The air precision regulator includes:
    a. Pressure gauge that displays the pressure in the fluid reservoir. A 0- to 100-psi (0- to 6.9-bar) pressure gauge is installed on the air regulator.
    b. Pressure control knob that enables adjustment of the pressure of the air entering the reservoir. 5-60 psi recommended for most applications.
2. **Compressed Air Line** – The air line consists of blue polyurethane tubing designed for compressed air use.
3. **Model 830 Valve** – A disposable fluid path valve used to dispense material from the material reservoir. This valve features suck-back, allowing drip-free dispensing from fill-to-fill.
4. **Disposable Fluid Path** – The fill tube and fittings used to deliver fluid material from bulk cartridges to syringes. It is constructed of black, light-blocking polyethylene tubing compatible with many types of commercial and medical fluids.
5. **Material Reservoir Retainer** – The reservoir retainers and tanks hold fluid reservoirs. Reservoir retainers accept cartridge reservoirs. Reservoir tanks accept bottle and pail reservoirs.
6. **Material Reservoir Support** – The adjustable vertical support is used to mount material reservoir support.
7. **Material Reservoir Pressure Supply** – The air supply line that pressurizes the material in the material reservoir retainer. The air regulator controls the pressure supplied to the material reservoir.
8. **Foot Switch** – Depression of the foot switch initiates the machine fill cycle. Once the foot switch is depressed, the machine will automatically cycle and shut off once the fill switch is tripped.
9. **Adjustable Syringe Support** – The support is used to ensure the syringe is supported to remain in line with the fill stop switch and the Luer or Oral tip fitting.
10. **Fill Stop** – The air-operated switch that controls the machine shut off once target fill volume is achieved.
11. **Cylinder Retract Switch** – Manual retraction switch for fill stop cylinder. This switch can be used to stop the machine operation at any time in the cycle.
12. **Quick Clamp Release** – The clamp mechanism is used to hold the material line in the Model 830 Valve. The clamp allows for quick and easy material line changeover.

Figure 1. Main Components of the Model 1001 Syringe Filling System

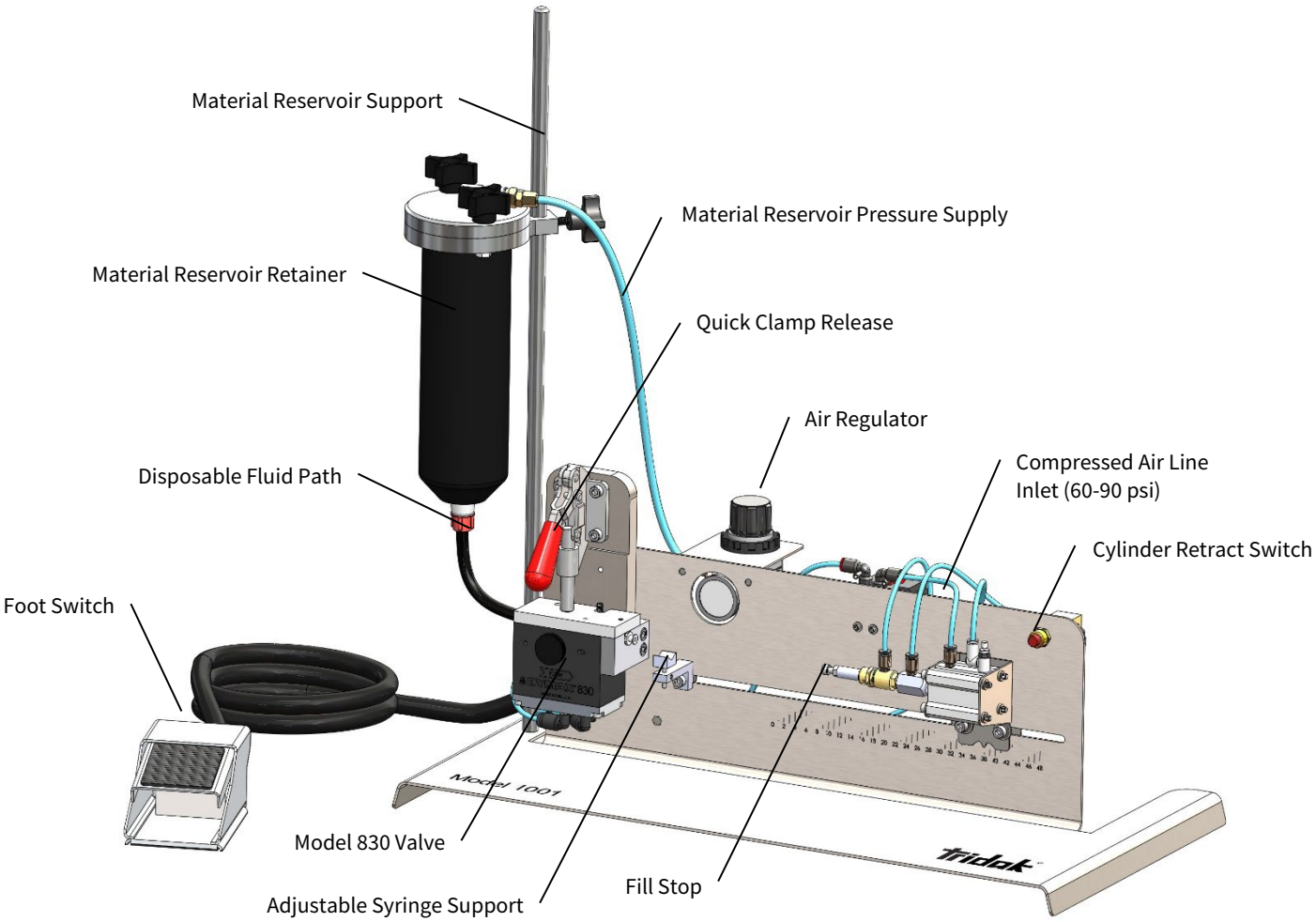

Assembly and Setup

Unpacking and Inspecting Your Shipment

When your system arrives, inspect the boxes for damage and notify the shipper of box damage immediately.

Open each box and check for equipment damage. If parts are damaged, notify the shipper and submit a claim for the damaged parts. Contact Tridak so that new parts can be shipped to you immediately.

The parts listed below will be included in your shipment. If parts are missing, contact your local Tridak representative or Tridak Customer Support to resolve the problem.

Parts Included in the Model 1001 Syringe Filling System

- Model 1001 with Foot Switch [1]
- Tube Assemblies – Luer Female [2]
- Reservoir [3]
- Rod Assembly [4]
- Airline Kit for Reservoir and Model 1001 [5 & 6]
- Allen Key Kit [7]
- 0.32" Bleed Wire with Pull Ring [8]
- Model 1001 User Manual [9]
- Stopper Pin (for use with plunger-less syringes) [Not Shown]

Figure 2. Unpacking Diagram

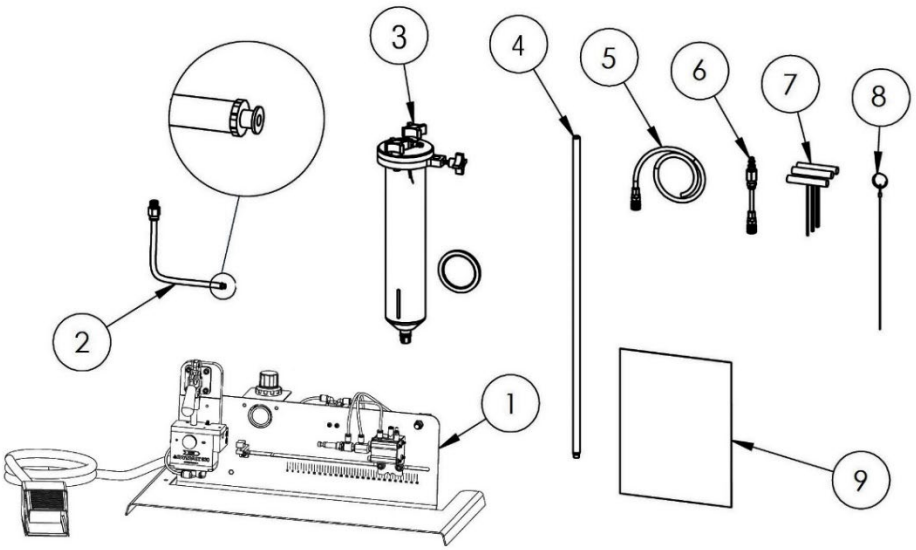

Utilities Required

AIR: Clean, dry, non-lubricated air operating pressure of 60 – 90 psi

Preparing the System for Use

Installing the Reservoir Support

1. Place the Reservoir Support on top of the screw hole in the left side of the system base.
2. Using the screw and washer provided, place screw with the washer through hole in base and attach to Reservoir Support. Tighten the screw until the Reservoir Support is secure (Figure 3).

Figure 3. Reservoir Support Installation

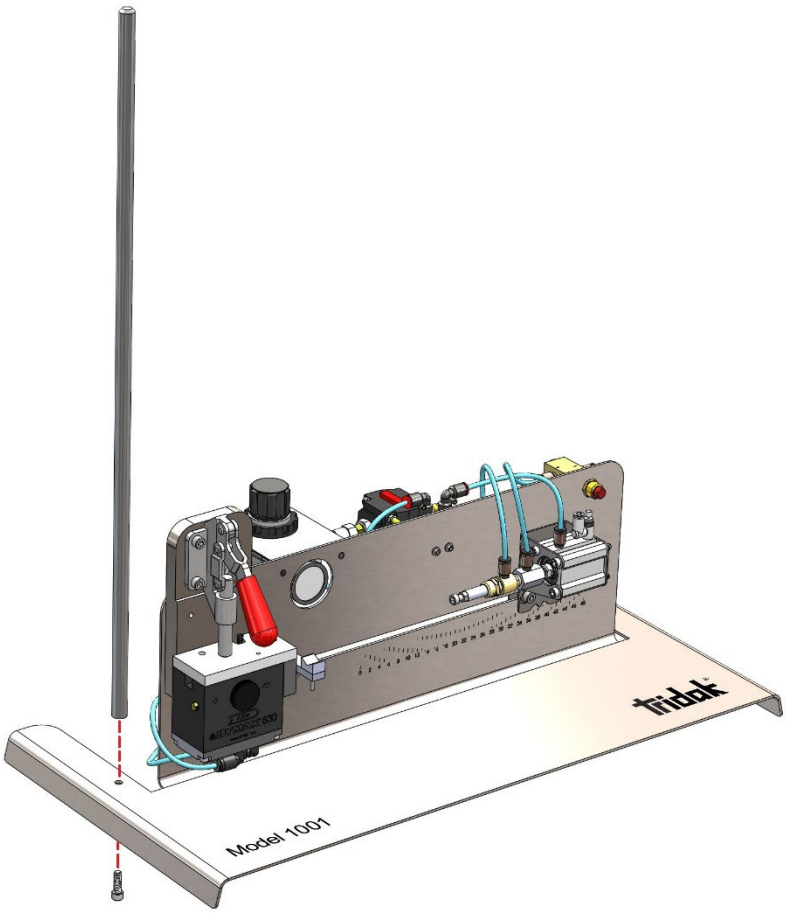

Installing the Material Reservoir

1. Slide the Material Reservoir Retainer (Figure 4, D) over the top of the Reservoir Support (Figure 4, B).
2. Position the Material Reservoir Retainer on the Reservoir Support so that the bottom of the Retainer is approximately 2 inches above the top of the Back Plate.
3. Using the Height Adjustment Handle (Figure 4, C) tighten the Set Screw until the Material Reservoir Retainer does not move.

Connecting the Material Reservoir Pressure Supply Tube

1. Connect the material reservoir's Pressure Supply (Figure 4, F) to the Air Regulator (Figure 4, G).
2. Connect the opposite end of the Material Reservoir Pressure Supply to the Material Reservoir Air Inlet.

NOTE: Do not connect air to compressed air line inlet (Figure 4, H) at this time.

Figure 4. Syringe Filler with 20 oz Cartridge Retainer (Rear View)

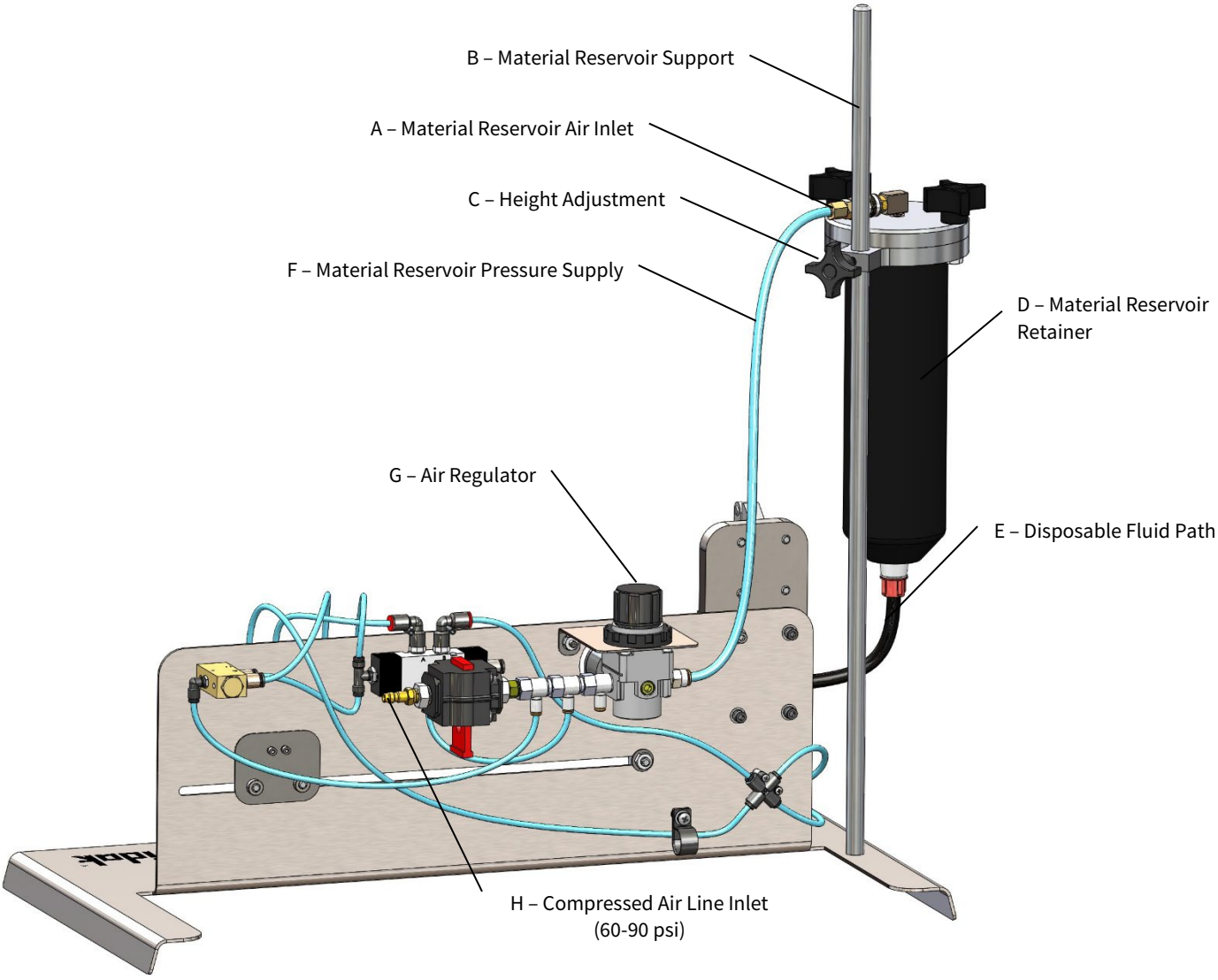

Operation

Preparing the Cartridge

1. Place pre-packaged, sealed Cartridge upright on a flat, stable working surface (Figure 5).
2. With the Nozzle up, remove the Colored Cap, and quickly insert the Mating Fitting from the Disposable Fluid Path (Figure 6). Tighten firmly.
3. Ensure the Fluid Path is sealed with a Luer Fitting and Cap before transporting or loading the Cartridge into the Reservoir Retainer.

   NOTE: Low-viscosity fluids may require PTFE wrap on threads.

Figure 5. Cartridge with Cap Installed

Figure 6. Cartridge with Fluid Path Installed

Loading the System

Filling Material Reservoir

1. Remove the Reservoir Retainer Cover by removing the Star Nuts and Cover. Ensure the Retainer is free and clear of any previously placed cartridges or packaging.
2. Insert the Cartridge/Fluid Path Assembly into the Reservoir Retainer.
3. Guide the Fluid Path downward, passing through the bottom of the Reservoir.
4. Press the Cartridge firmly into place until seated.
5. Replace the Reservoir Retainer Cover and tighten evenly and securely with Star Nuts until the Cover forms a solid seal around the Cartridge.

If you experience any trouble, please contact Tridak Customer Service.

Figure 7. Material Reservoir Exploded Diagram

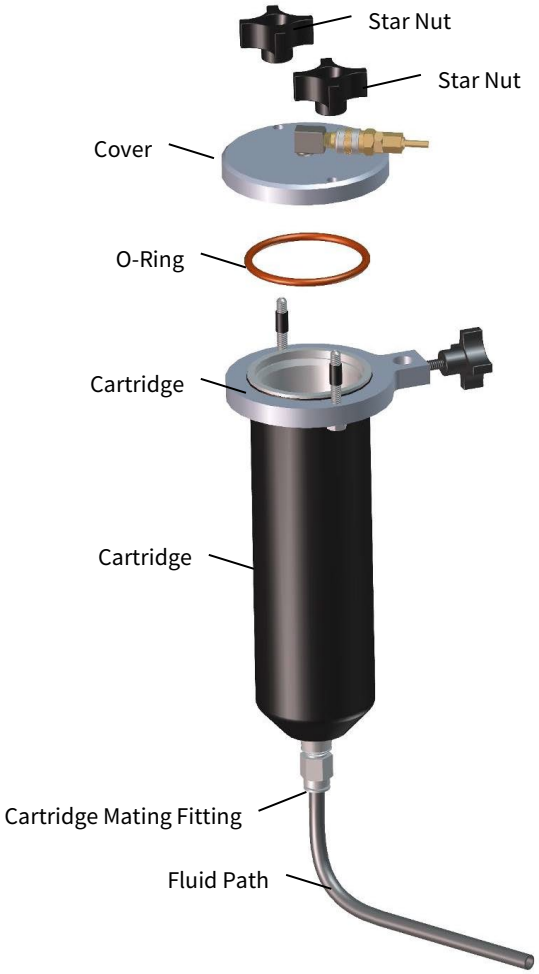

Installing the Fluid Path

1. Open quick clamp by lifting handle upward to open position.
2. Position the Fluid Path in the Luer Block Clamp so that the outer edge of the Luer Block Clamp just catches the Luer Tip.
3. Close quick clamp by lowering handle downward to closed and locked position.
4. Ensure tubing remains centered in Model 830 Valve during clamping.

Figure 8. Luer Block Clamp

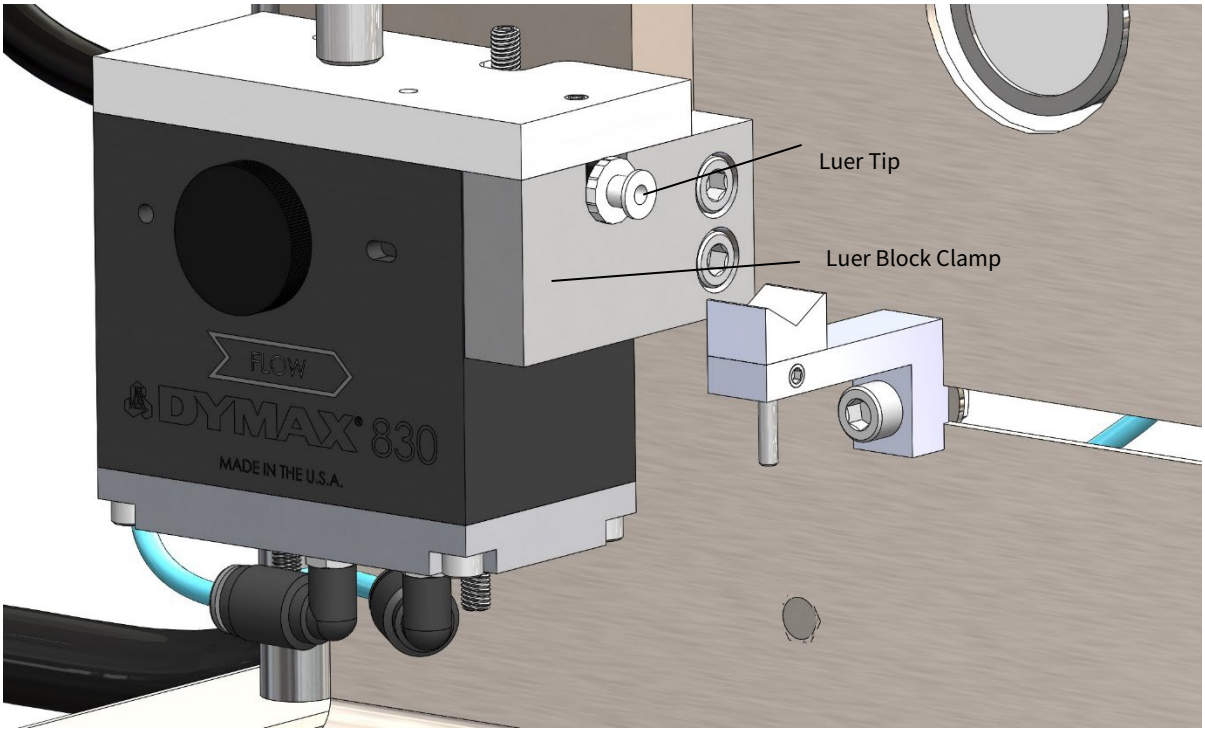

Figure 9. Fluid Path Installation

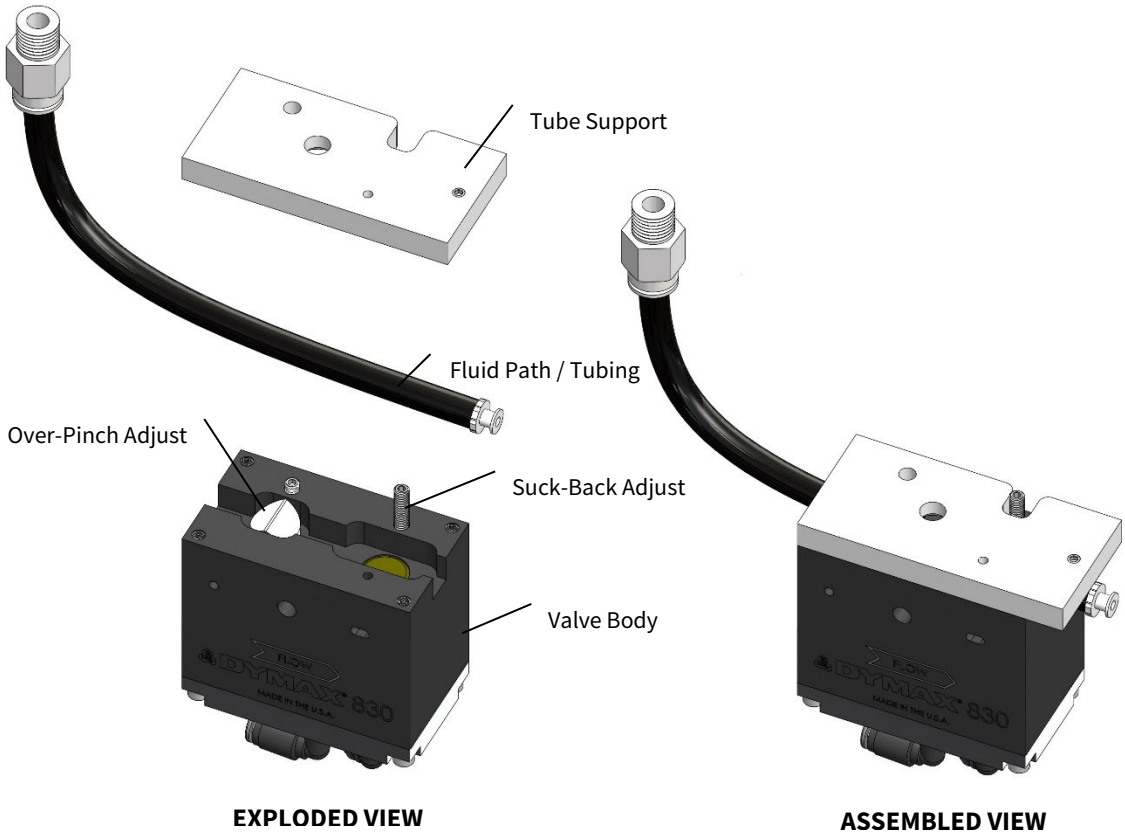

NOTE: Follow the same assembly and replacement for the following filling configurations:

T15225	TUBE ASSEMBLY, LUER FEMALE

Pressurizing the System

NOTE: *Before operating the machine at the beginning of each run, check that all tubes, covers, guards, and safety devices are properly installed for operation.*

The system is energized when a compressed air supply is connected to the System Pressure Inlet.

WARNING! *Do not exceed 90 psi system pressure.*

The following steps must be completed in order to safely pressurize the system. If these steps are not followed correctly, it is possible to create a situation that could result in a material spill through the Luer Tip.

1. Ensure that the Fluid Path is correctly installed in the Luer Support and the Tube Support.

2. Check that the Luer Clamp and the Tube Support are clamped fully.
3. Ensure the Luer Tip Cap is installed and tightened onto the Luer Tip.
4. Disconnect the Material Reservoir Pressure Supply from the Material Reservoir Air Inlet.
5. Connect a Compressed Air Supply (max 90 psi) to the System Pressure Inlet.
6. Set the Air Regulator to 0 psi.
7. Connect the Material Reservoir Pressure Supply to the Material Reservoir Air Inlet.
8. Set the Air Regulator to 10 psi starting pressure.
9. Check for any material leaks occurring at the Luer Tip or at the Material Cartridge and depressurize the system if any leaks are present.

Depressurizing the System

1. Ensure the Luer Tip Cap is installed and tightened onto the Luer Tip.
2. Set the Air Regulator to 0 psi.
3. Disconnect the Material Reservoir Pressure Supply from the Material Reservoir Air Inlet.
4. Disconnect the Compressed Air Supply from the System Pressure Inlet.

Adjusting the Syringe Rest

Use the adjustable syringe rest to support the syringe during the fill cycle, and ensure the syringe is centered around the fill stop switch. (Figure 10)

1. Slightly loosen the Syringe Rest Base Screw.
2. Slide the Syringe Rest Base along the fixture base slot channel until the Syringe Rest is close to the syringe flange.
3. Tighten the Syringe Base Screw.
4. Loosen the Syringe Rest Set Screw.
5. Lift the Syringe Rest until the v-block is fully supporting the syringe.
6. Tighten the Syringe Rest Set Screw.

Setting the Fill Amount for the Syringe Size

For the required syringe size, use the scale to set the fill volume by adjusting the syringe fill stop to the desired location.

1. Disconnect the Compressed Air Supply from the Material Reservoir.
2. Connect the incoming Air Supply Line to the Compressed Airline Inlet.

3. By hand, set the Syringe Piston or Plunger to the desired fill/mL volume.
4. Twist or slide the Syringe and Piston or extended Plunger on to the Nozzle/Needle/Luer-Lock Tip of the Fluid Path.
5. Loosen the Syringe Fill Adjustment Lock by loosening the bottom two Allen Cap Screws (Figure 10).
6. Press and release the Foot Switch to extend the fill stop cylinder.
7. Move the Syringe Fill Stop to the position where it immediately touches the extended Syringe Plunger or Syringe Piston.
8. Re-tighten the Syringe Fill Stop using Allen Cap Screws.
9. Press the Cylinder Retract switch to reset the system.
10. Connect the Compressed Air Supply from the Material Reservoir.

Figure 10. Model 1001 with Syringe Inserted

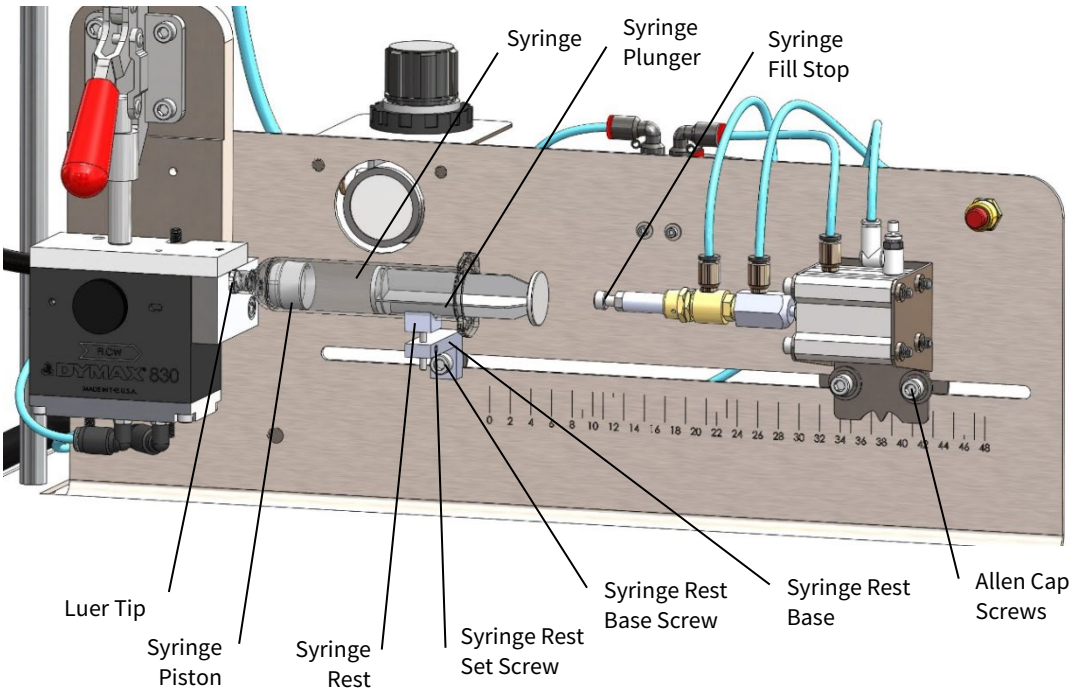

Priming the System

During initial setup and when changing material cartridge reservoirs, air must be purged from the disposable fluid path/fill tube to prevent accidental spills and introducing bubbles into syringes. Prime the system by running material through the fluid path until a constant, solid flow of material is achieved. Depending on material, reducing the pressure by 5-15 psi will make it easier to see the air being purged.

Preparing the Syringes

Before filling each syringe, ensure the syringe plunger is fully inserted to the tip of the syringe to remove most of the air from the empty syringe.

Filling the Syringe

1. Remove the Cap from the Luer Tip.
2. Load the required Syringe size by threading it onto the Luer Tip (Figure 10).
3. Make sure all hands and fingers are clear of the machine. Press and release the Foot Switch to activate the filling cycle.
4. The system will automatically shut off when the Syringe Piston or Syringe Plunger touches the Syringe Fill Stop.

   NOTE: Use the Cylinder Retract Switch as an E-Stop if the machine does not stop automatically.
5. Remove the Syringe from the Luer Tip.
6. Cap the Syringe Tip and the Syringe End as needed.
7. Repeat above steps 2 through 6 for each additional syringe needed.

Model 830 Valve Adjustments

The Model 830 Valve highlights a suck-back feature to prevent oozing and dripping between syringes. Depending on the type of fluids used, the suck-back feature will require adjustment. Batch-to-batch adjustment is recommended. If material drips, suck-back should be increased. If there are air bubbles in the syringe, decrease the amount of suck-back.

Adjusting Suck-Back Position (Front)

The Adjustment Screw is located on the top face of the valve. To increase suck-back, loosen the adjustment screw counter-clockwise. To decrease suck-back, tighten the adjustment screw clockwise (Figure 11)

Figure 11. Suck-Back Adjustment Screw

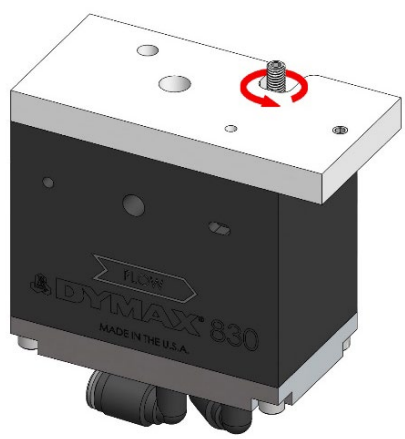

Increase Suck-Back (Counter-Clockwise)

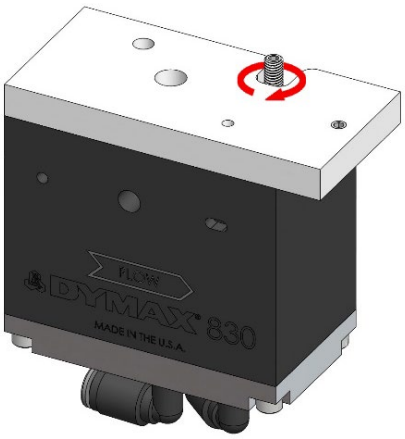

Decrease Suck-Back (Clockwise)

Cleaning and Maintenance

System Cleaning

Switching to a Different Material

The disposable fluid path in the Model 830 Valve allows for quick and easy material changeover. To switch your system over from dispensing one material to dispensing a new material, simply replace the fluid path tube in the dispensing valve. You will also need to replace the material reservoir on the system. The new material can be placed in a new material reservoir or the existing reservoir can be cleaned, and the material replaced.

Spare Parts and Accessories

Item	Part Number
Air Lines & Regulators	
Air Supply Line	D10256
Material Regulator Replacement Kit	T18297
Reservoir Cartridge Kits	
20 oz Cartridge Reservoir	D10244
32 oz Cartridge Reservoir	D10245
1 Gallon Reservoir	T17004
Low-Level Sensing Kits	
20 oz Low Level Reservoir	T17970
32 oz Low Level Reservoir	T17922
1 Gallon Low Level Reservoir	T17985
Model 830 Parts	
Model 830 Valve	D10261
Model 830 Valve Rebuild Kit	D10266
Tube Assemblies	
Tube Assembly, Luer Female	T15225
Tube Assembly, No Tip (For Use with Custom Tooling)	T18305
Misc.	
Bleed Wire with Pull Ring	T18218
Pneumatic Foot Switch	T16603
Nut Back Plate	T17990
Nut Back Plate Screw	T114230
Luer-Lock Fitting, Female, Push-In (White)	T40496
Luer-Lock Fitting, Female, Push-In (Black)	T11978

Specifications

Materials of Construction—Wetted Parts

- Dispensing valve = no wetted parts
- Fluid tubing = light blocking, black, polyethylene
- Fluid cartridge reservoirs = HPDPE
- Fluid cartridge reservoir piston = HDPE
- Fluid tubing fittings = acetal

Operating Specifications

Recommended compressed air supply pressure to air filter/regulator = 60 psi min (4.1 bar)
Maximum pressure setting at air filter/regulator = 100 psi (6.9 bar)

Compatible material viscosity range: 1 – 60,000 cP

Reservoir Retainer/Tank Sizes

Cartridge retainers hold 20 and 32-oz (550 and 900-mL) reservoirs
1-gallon (3.8 L) jug and 5-gallon (15L) pail drop in reservoir options available: inquire with Tridak Customer Service

Air Regulator Pressure Gauges

Pressure gauge installed from factory = 0 to 100 psi (0 to 6.9 bar) Dimensions

Dimensions (L x W x H) – 24 in x 12 in x 25 in (60.96 cm x 30.48 cm x 66.04 cm)

Figure 12. Model 1001 Syringe Filling System Dimensions

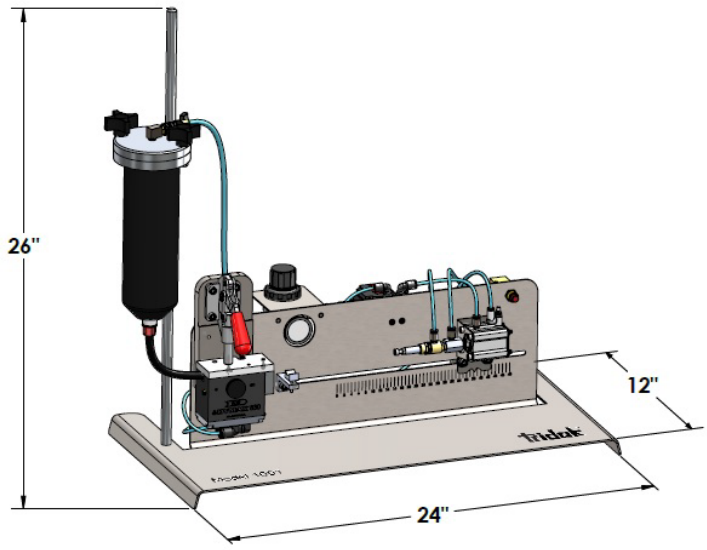

Index

Accessories, 18
Assembly & Setup, 8
Cleaning, 18
Dimensions, 19
Dispensing Valve Adjustments
  Suck-Back, 17
Help, 4
Installation
  Material Reservoir, 9
  Material Reservoir Pressure Supply Tube, 10
  Reservoir Support, 9
Introduction, 4
Maintenance, 18
Model 830, 17
Operation, 11
Parts List, 8
Product Overview, 5
Safety, 4
Spare Parts, 18
Specifications, 19
System Components, 6
Utilities, 8

Tridak Inc | 151 Ella Grasso Ave, Unit 1, Torrington, CT 06790 USA | 860.626.6700 | info@tridak.com | www.tridak.com

© 2019-2026 Tridak Inc. All rights reserved. All trademarks in this guide, except where noted, are the property of, or used under license by Tridak Inc.

Please note that most filling and repackaging system applications are unique. Tridak does not warrant the fitness of the product for the intended application. Any warranty applicable to the product, its application and use is strictly limited to that contained in Tridak's standard Conditions of Sale. Tridak recommends that any intended application be evaluated and tested by the user to ensure that desired performance criteria are satisfied. Tridak is willing to assist users in their performance testing and evaluation. Data sheets are available for pressure pots upon request.

T18762 MAN096 / TMAN007 9/22/2026