TR24M-2C-XFT-XX
CREATED 02/08/21

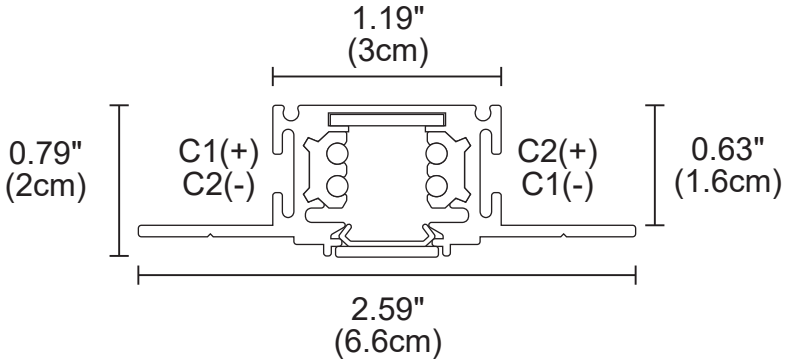

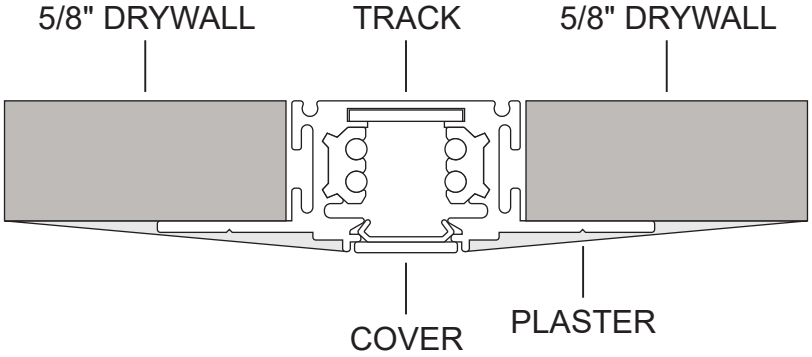

T24M-2C-SC

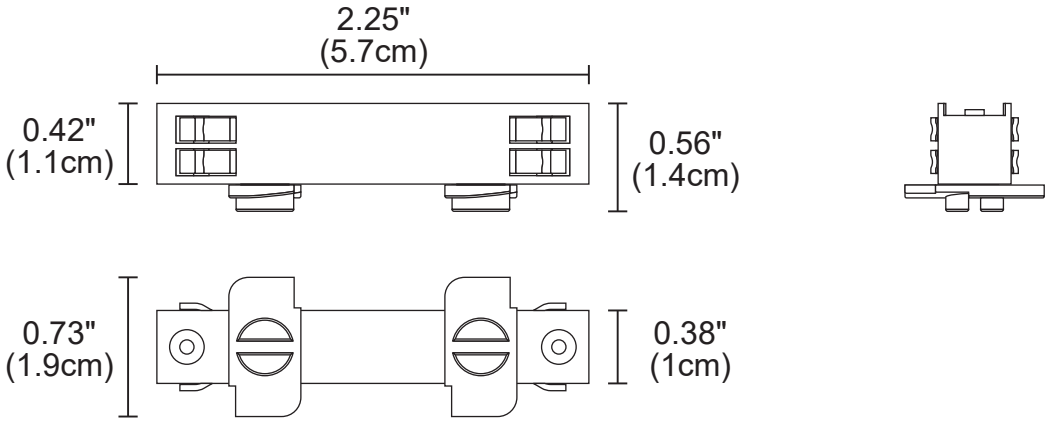

T24M-2C-SNC

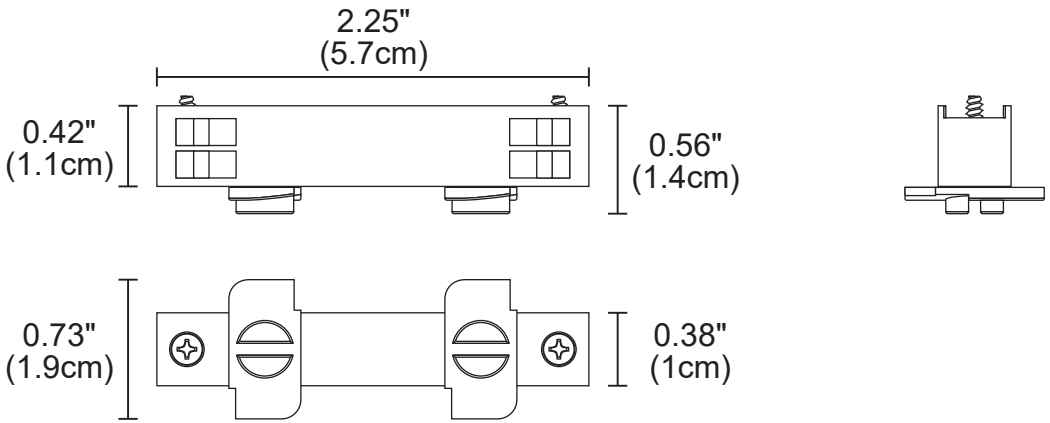

T24M-2C-P
CREATED 02/08/21

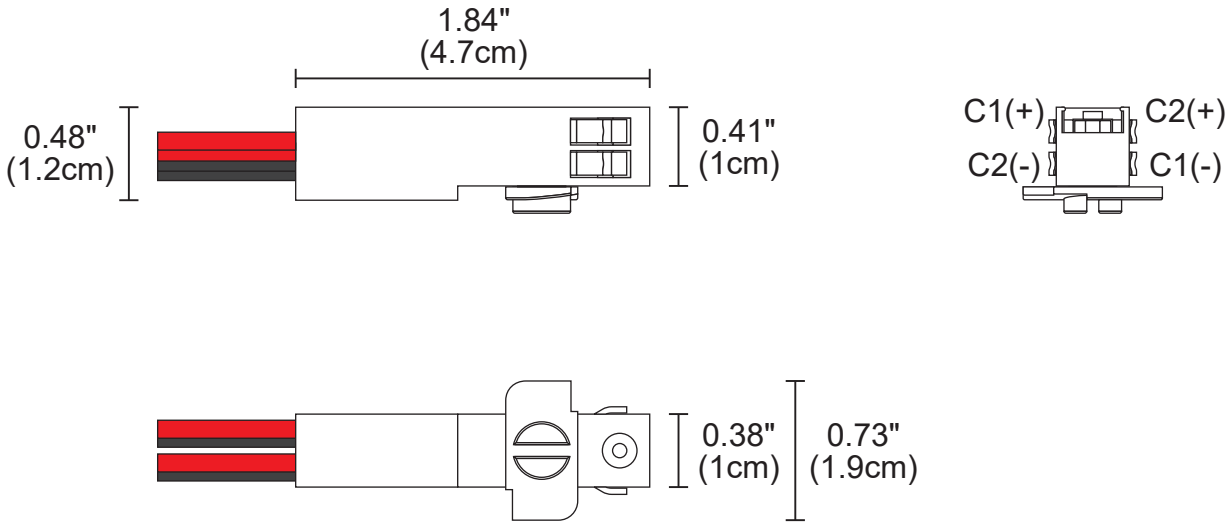

TR24M-1C-ILP
CREATED 02/08/21

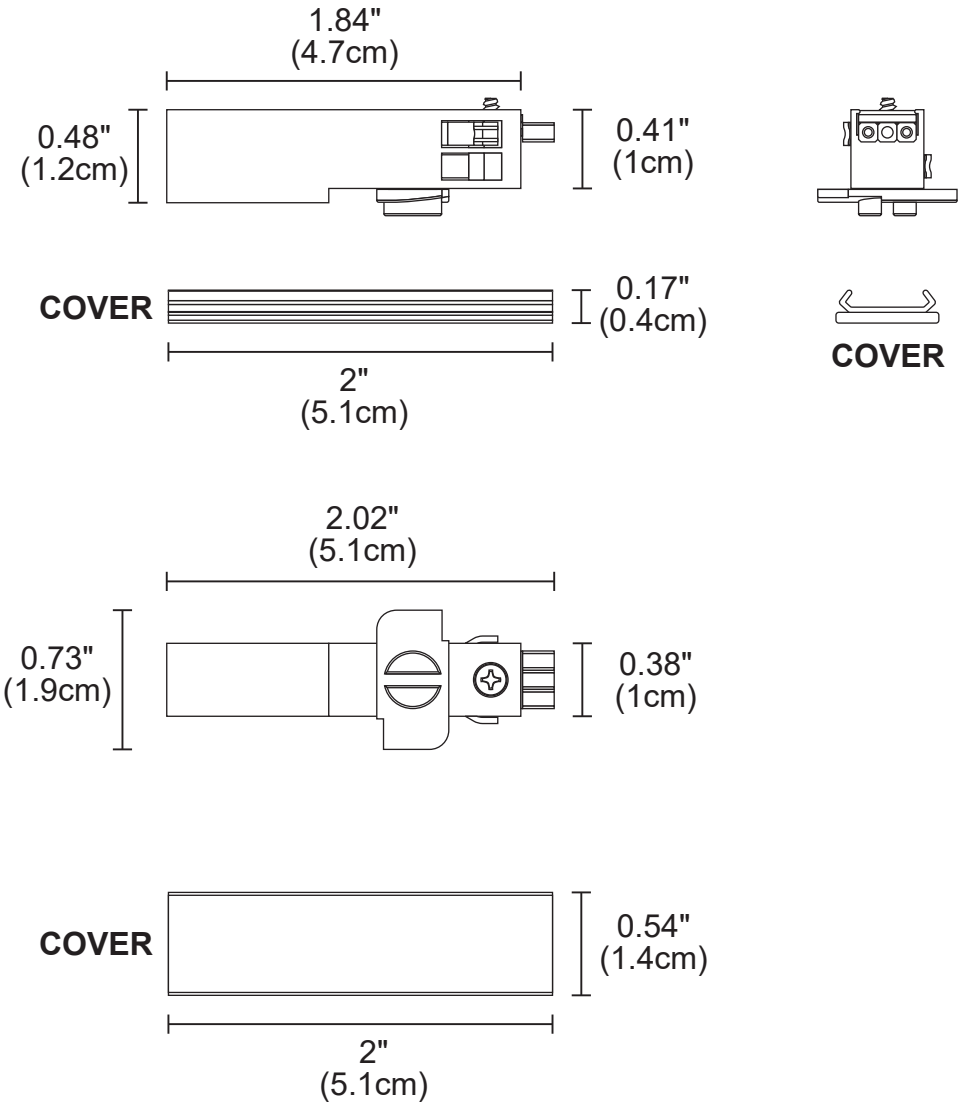

T24M-2C-LJC-XX
CREATED 02/08/21

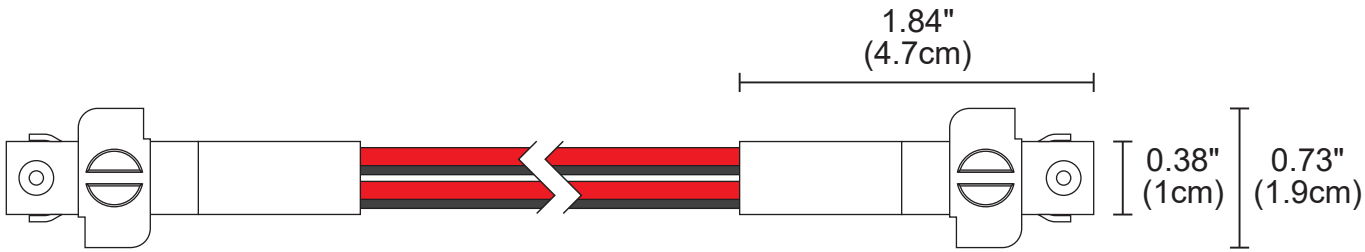

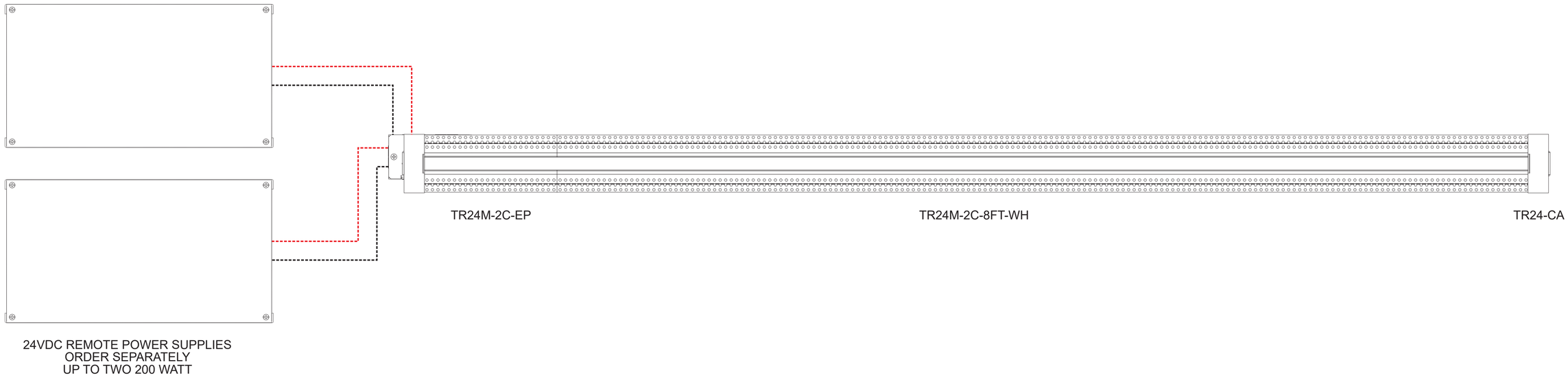
TR24M-2C-EP
TR24M-2C-8FT-WH
TR24-CA
24VDC REMOTE POWER SUPPLIES
ORDER SEPARATELY
UP TO TWO 200 WATT

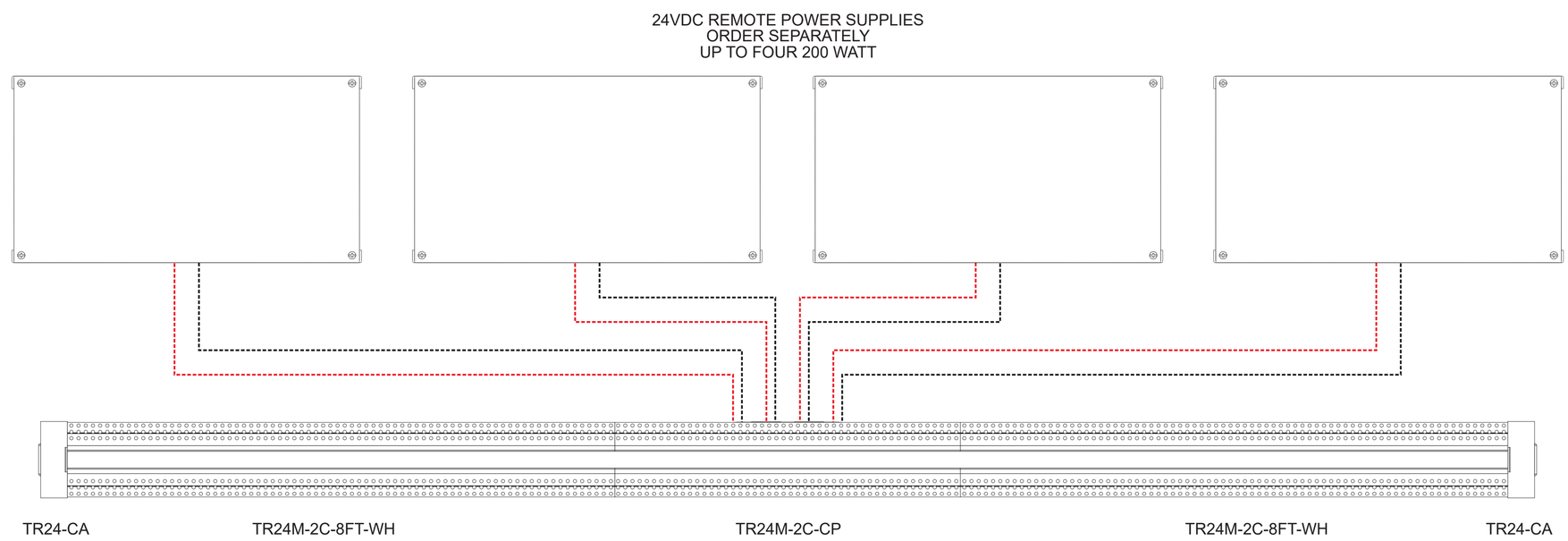
24VDC REMOTE POWER SUPPLIES
ORDER SEPARATELY
UP TO FOUR 200 WATT
TR24-CA
TR24M-2C-8FT-WH
TR24M-2C-CP
TR24M-2C-8FT-WH
TR24-CA