NXT52 & NXT40 Hooklift
Installation Manual

Installation & Assembly Instructions

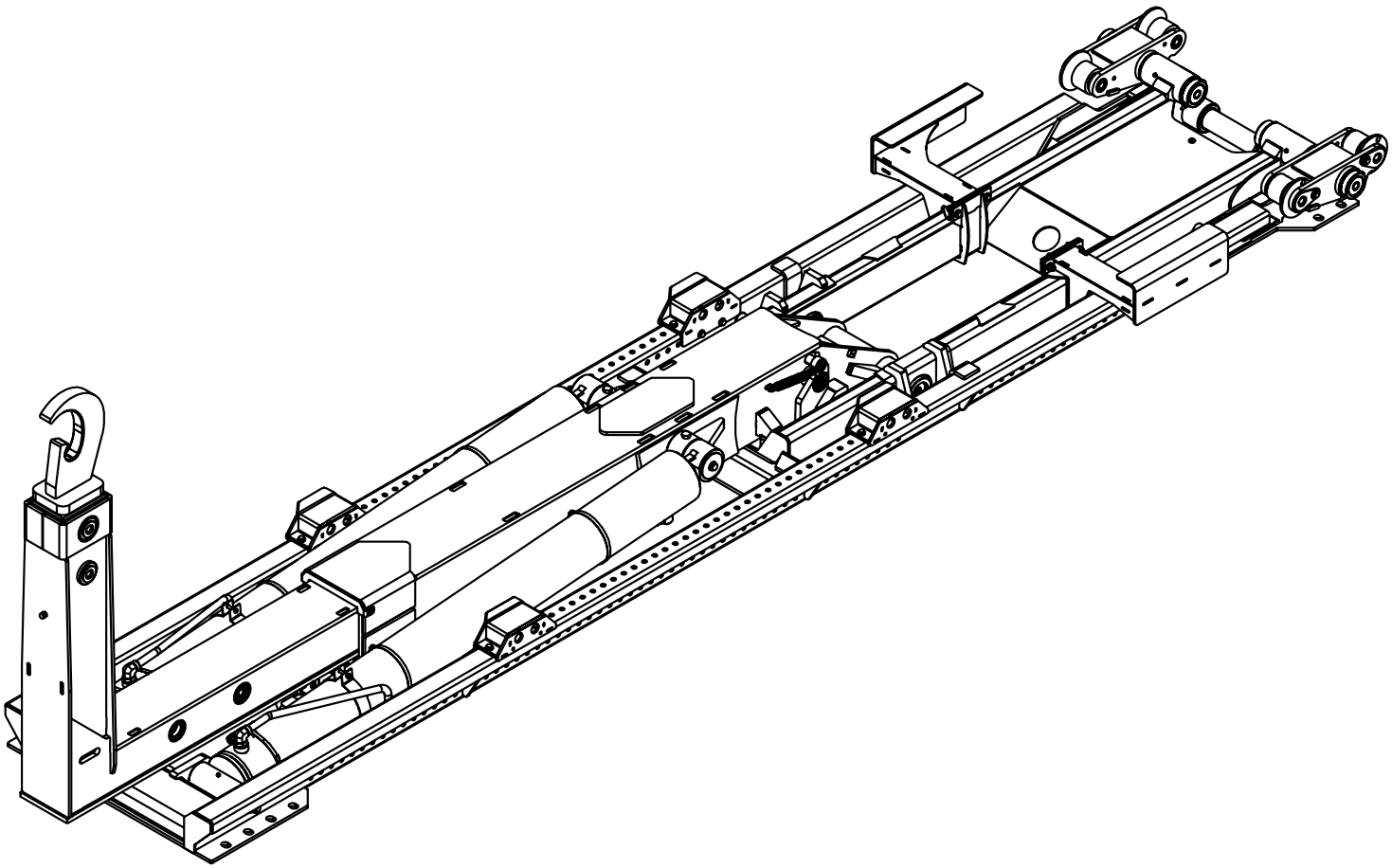

Stellar Industries, Inc.
190 State Street
PO Box 169
Garner, IA 50438
800-321-3741
Fax: 641-923-2811
www.stellarindustries.com

Subject to Change without Notification.
© 2023 Stellar Industries, Inc.

REV 1.3
PN: 131927

P65 Warning & Cold Weather Notice

⚠ WARNING

Operating, maintaining, and servicing a Stellar product may expose you to chemicals including, but not limited to, engine exhaust, carbon monoxide, phthalates, and lead. These chemicals are known to the State of California to cause cancer and birth defects (or other reproductive harm). To keep your exposure to a minimum, be sure to avoid breathing exhaust and service your Stellar product in a well-ventilated area while wearing gloves or washing your hands frequently. For more information, go to www.P65Warnings.ca.gov/passenger-vehicle.

www.p65/warning.ca.gov

NOTICE

Cold Weather Performance

Although clear data on cold weather performance from every steel manufacturer is not available for all types and thicknesses of steel, Stellar Industries is confident that the weldments on our products will operate to 100% of their intended purpose to temperatures down to -40° F / C.

It is recommended if Stellar manufactured equipment needs to be used in temperatures below -40° F / C, the operator should pull the unit into a climate-controlled area and allow the weldments to warm up to and then maintain a temperature above this level.

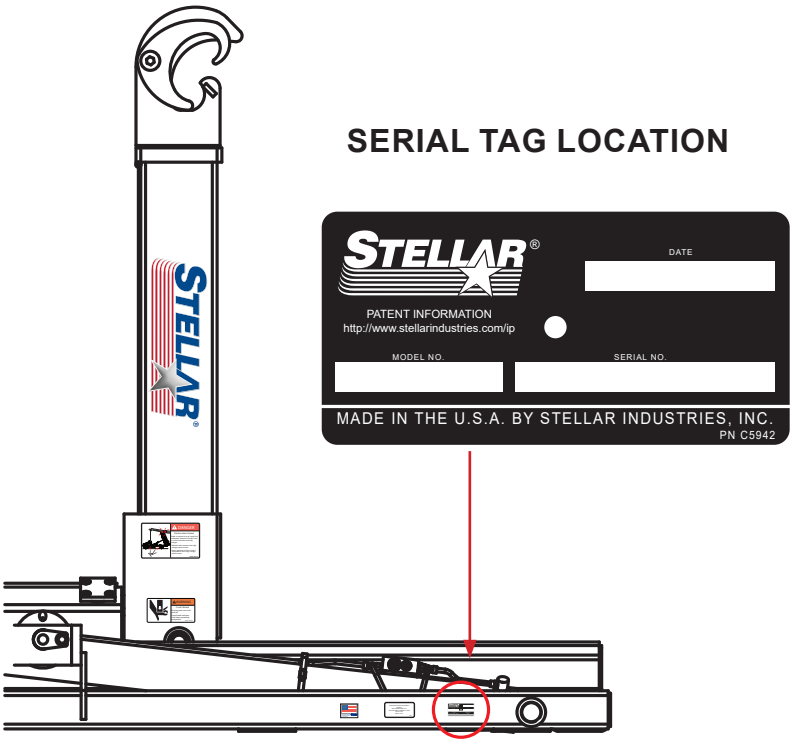

Table of Contents

Introduction iv

Chapter 1 - Specifications 1

NXT52 Specifications 2
NXT52 Specifications - Continued 3
NXT40 Specifications 4
NXT40 Specifications - Continued 5

Chapter 2 - Installation Instructions 7

General Installation 8
Installer Notice 8
Torque Data Chart 9
Torquing Information & Warnings 9
Step 1: Set The Hooklift Onto The Truck Frame 10
Installation Notice 10
Mounting Kit - PN 129440 11
Step 2: Bolt Mounting Angles and Plates to Base 12
Step 3: Drill Mounting Holes Into Frame Rail 13
Step 4: Bolt Mounting Angles And Plates To Truck Frame 14
Step 5: Install Bumper 15
Step 5A: Bumper Electrical Schematic 16
Step 6: Installation - Valve Bank Assembly - PN 129905 17
Installation - Hydraulic Tank Assembly - PN 130144 18
Step 7: Install PTO and Pump 19
Step 8: Route Hydraulic Hoses 20
Hose Kit - PN 129649 21
3-Section Hose Kit - PN 132321 22
Power Beyond VDM8 Valve 23
NXT52 Controller Assembly PN 131283 24
NXT52 Controller Assembly PN 131283 Parts List 25
NXT40 Controller Asm, 2-Sect w/VB Asm PN 135331 26
NXT40 Controller Asm, 2-Sect w/VB Asm PN 135331 27
NXT40 Controller Asm, 3-Sect w VB Asm PN 135332 28
NXT40 Controller Asm, 3-Sect w VB Asm PN 135332 29
NXT52 Controller Asm, 3-Sect w VB Asm PN 131705 30
NXT52 Controller Asm, 3-Sect w VB Asm PN 131705 Part 31
Air Schematic Control Tower Asm PN 132688 32
Air Schematic Control Tower Asm PN 132688 Parts List 33
Step 9: Install Hoist Up Light Sensor - PN 127153 34
Hoist Up Light Sensor - PN 127153 Parts 35
NXT52 Step 10: Apply Chassis Decals - PN 127720 36
NXT40 Step 10A: Apply Chassis Decals - PN 121012 37
Step 11: Fill Reservoir And Activate Hydraulic Flow 38
Step 12: Operate Hooklift 38

Introduction

A copy of this manual is provided with every hooklift and can be found in the hard plastic manual case that is installed on the chassis. A copy of this manual shall remain with the hooklift at all times.

Throughout the manual, three signal words will be used to bring attention to important items:

NOTICE **NOTICE** indicates a practice not related to physical injury.

⚠WARNING **WARNING** indicates a hazardous situation which, if not avoided, could result in death or serious injury.

⚠ DANGER **DANGER** indicates a hazardous situation which, if not avoided, will result in death or serious injury.

Information contained within this manual does not cover operation, maintenance, or troubleshooting. Please refer to the General Hooklift Manual for details on these items.

This manual is not binding. Stellar Industries, Inc. reserves the right to change, at any time, any or all of the items, components, and parts deemed necessary for product improvement or commercial/production purposes. This right is kept with no requirement or obligation for immediate mandatory updating of this manual.

If more information is required or technical assistance is needed, or if you feel that any part of this manual is unclear or incorrect, please contact the Stellar Customer Service Department by phone at 800-321-3741 or email at service@stellarindustries.com.

www.stellarindustries.com

For Technical Questions, Information, Parts, or Warranty, Call Toll-Free at

800-321-3741

Hours: Monday - Friday, 8:00 a.m. - 5:00 p.m. CST

Or email at the following addresses:

Technical Questions, and Information	service@stellarindustries.com
Order Parts	parts@stellarindustries.com
Warranty Information	warranty@stellarindustries.com

Chapter 1 - Specifications

CHAPTER CONTENTS

NXT52 Specifications 2
NXT52 Specifications - Continued 3
NXT40 Specifications 4
NXT40 Specifications - Continued 5

NXT52 Specifications

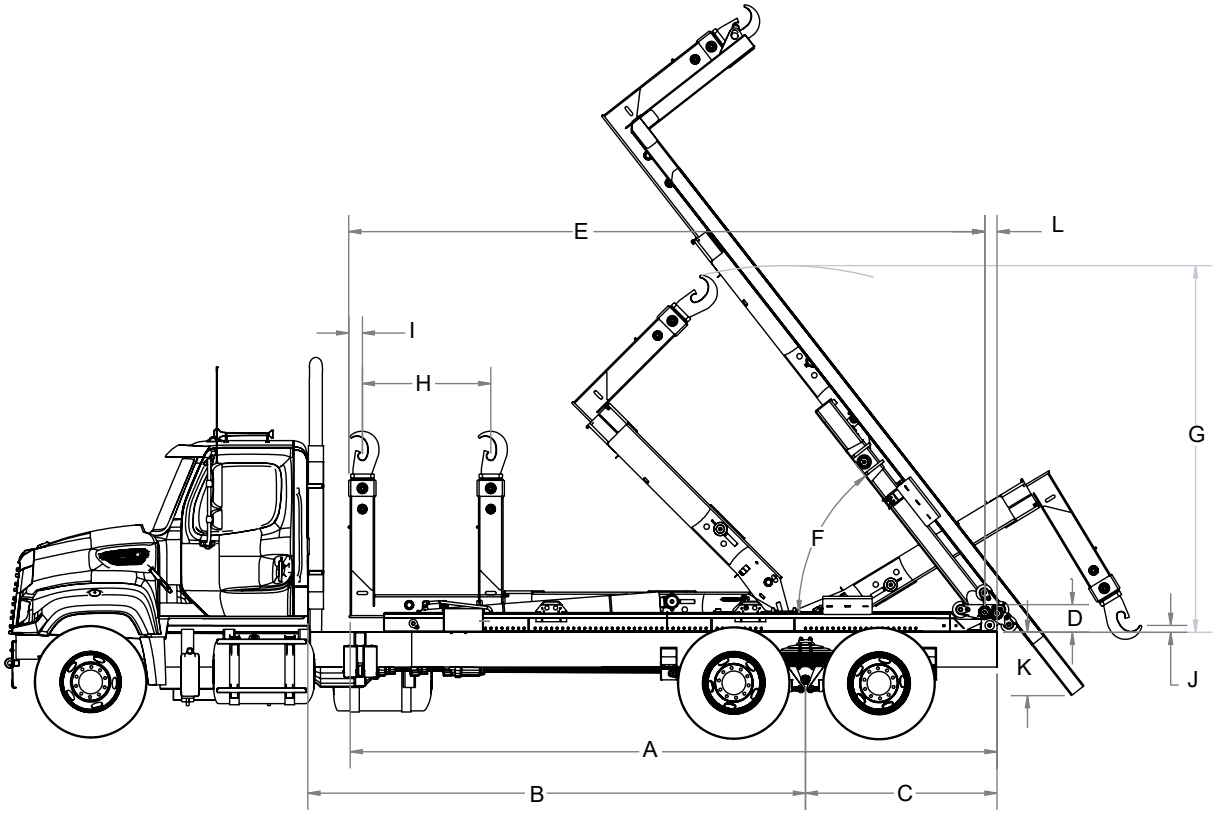

		NXT52S- 54” OR 62”	NXT52L 54” OR 62”
A	OVERALL LENGTH	229.50” *(5,829 mm)*	242.50” *(6,160 mm)*
B	CAB-TO-AXLE RANGE	174” TO 202” *(4,449 to 5,181 mm)*	182” TO 214” *(4,623 TO 5,436 mm)*
C	AFTER FRAME RANGE	59” *(1,498 mm)*	64” *(1,626 mm)*
D	LOADER HEIGHT	10.50” *(267 mm)*	
E	FRONT OF JIB TO CENTERLINE OF ROLLER	227” *(5,766 mm)*	240” *(6,096 mm)*
F	DUMP ANGLE	52”	
G	MAX TILT HEIGHT	54” HH: 137.13” *(3,483 mm)* 62” HH: 141.38” *(3,591 mm)*	
H	JIB TRAVEL	35” *(889 mm)*	48” *(1,219 mm)*
I	FRONT OF JIB TO CENTERLINE OF HOOK	5.19” *(132 mm)*	
J	HOOK BELOW FRAME	54” HH: 3” *(76 mm)* Above Frame 62” HH: 3.56” *(90 mm)* Below Frame	
K	LOWEST POINT OF DUMP*	23.63” *(600 mm)*	
L	CENTERLINE TO BACK OF ROLLER	6” *(152 mm)*	
***ASSUMES 3’ OVERHANG FROM CENTER OF REAR ROLLER PIN. (BUMPER TYPICALLY 12” FROM CENTER OF ROLLER PIN)**			

NXT52 Specifications - Continued

NXT52	
HOOK HEIGHT:	54” (1,372 mm) OR *61.75” (1,568 mm)*
LIFT CAPACITY	54” HH: 52,000 LB *(23,587 kg)*
	61.75”: HH: 52,000 LBS *(23,587 kg)*
DUMP CAPACITY:	52,000 LB *(23,587 kg)*
CYCLE TIMES	TILT / DUMP EXTEND: 25 SECONDS
	TILT / DUMP RETRACT: 70 SECONDS
	JIB EXTEND - 11 SECONDS
	JIB RETRACT - 10 SECONDS
	(TIMES BASED ON 24 GPM OF OIL FLOW.)
SHIPPING WEIGHT:	LONG/SHORT VERSION - MANUAL JIB: 6,015 LBS *(2,728 kg)*
	LONG/SHORT VERSION- HYDRAULIC JIB: 6,120 LBS *(2,776 kg)*
	(WITHOUT RESERVOIR AND BODY LOCKS.)
BODY LENGTHS:	SHORT VERSION: 16’ – 20’ *(4,877 – 6,096 mm)*
	LONG VERSION: 16’ – 22’ (*4,877 – 6,706 mm)*
MIN. TRUCK GVWR:	54,000 LB *(24,494 kg)*
MAXIMUM HYDRAULIC FLOW:	24 GPM *(90.8 Lpm)*
OPERATING PRESSURE	4,500 PSI *(310 Bar)*
COMPONENTS	MAIN COMPONENTS ARE MANUFACTURED WITH HIGH-STRENGTH STEEL. GREASABLE BUSHINGS AT ALL PIVOT POINTS. ALL PINS ARE ZINC-PLATED CARBON STEEL AS STANDARD WITH AN OPTION TO UPGRADE TO TYPE 17-4 STAINLESS PINS.

NXT40 Specifications

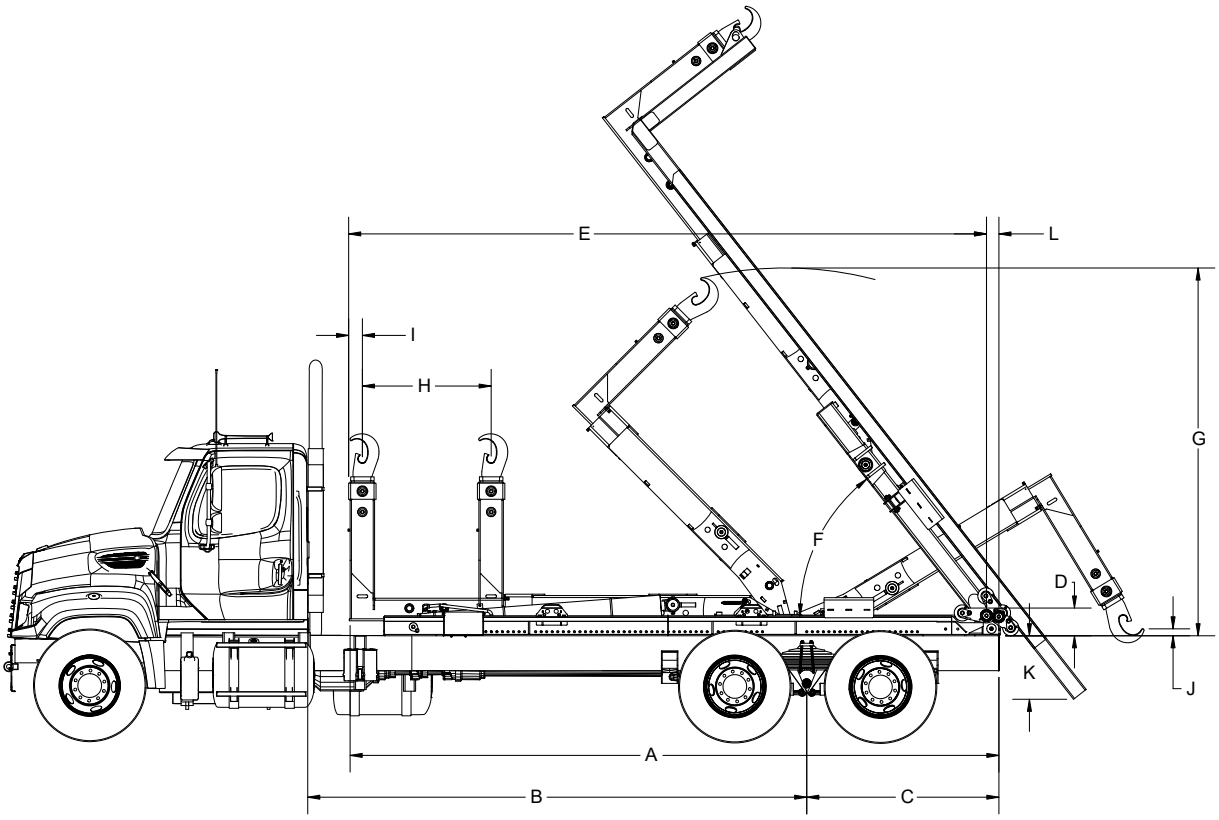

		NXT40S 54” OR 62”	NXT40L 54” OR 62”
A	OVERALL LENGTH	229.50” *(5,829 mm)*	242.50” *(6,160 mm)*
B	CAB-TO-AXLE RANGE	174” TO 202” *(4,449 to 5,181 mm)*	182” TO 214” *(4,623 TO 5,436 mm)*
C	AFTER FRAME RANGE	59” *(1,498 mm)*	64” *(1,626 mm)*
D	LOADER HEIGHT	10.50” *(267 mm)*	
E	FRONT OF JIB TO CENTERLINE OF ROLLER	227” *(5,766 mm)*	240” *(6,096 mm)*
F	DUMP ANGLE	52”	
G	MAX TILT HEIGHT	54” HH: 137.13” *(3,483 mm)* 62” HH: 141.38” *(3,591 mm)*	
H	JIB TRAVEL	35” *(889 mm)*	48” *(1,219 mm)*
I	FRONT OF JIB TO CENTERLINE OF HOOK	5.19” *(132 mm)*	
J	HOOK BELOW FRAME	54” HH: 3” *(76 mm)* Above Frame 62” HH: 3.56” *(90 mm)* Below Frame	
K	LOWEST POINT OF DUMP*	23.63” *(600 mm)*	
L	CENTERLINE TO BACK OF ROLLER	6” *(152 mm)*	
***ASSUMES 3’ OVERHANG FROM CENTER OF REAR ROLLER PIN. (BUMPER TYPICALLY 12” FROM CENTER OF ROLLER PIN)**			

NXT40 Specifications - Continued

NXT52	
HOOK HEIGHT:	54” *(1,372 mm)* OR 61.75” *(1,568 mm)*
LIFT CAPACITY	54” HH:40,000 LB *(18,144 kg)*
	61.75”: HH: 40,000 LB *(18,144 kg)*
DUMP CAPACITY:	40,000 LB *(18,144 kg*
CYCLE TIMES	TILT / DUMP EXTEND: 25 SECONDS
	TILT / DUMP RETRACT: 70 SECONDS
	JIB EXTEND - 11 SECONDS
	JIB RETRACT - 10 SECONDS
	(TIMES BASED ON 24 GPM OF OIL FLOW.)
SHIPPING WEIGHT:	LONG/SHORT VERSION - MANUAL JIB: 5,590 LBS *(2,535 kg)*
	LONG/SHORT VERSION- HYDRAULIC JIB: 5,695 LBS *(2,583 kg)*
	(WITHOUT RESERVOIR AND BODY LOCKS.)
BODY LENGTHS:	SHORT VERSION: 16’ – 20’ *(4,877 – 6,096 mm)*
	LONG VERSION: 16’ – 22’ (*4,877 – 6,706 mm)*
MIN. TRUCK GVWR:	50,000 LB *(22,680 kg)*
MAXIMUM HYDRAULIC FLOW:	24 GPM *(90.8 Lpm)*
OPERATING PRESSURE	4,500 PSI *(310 Bar)*
COMPONENTS	MAIN COMPONENTS ARE MANUFACTURED WITH HIGH-STRENGTH STEEL. GREASABLE BUSHINGS AT ALL PIVOT POINTS. ALL PINS ARE ZINC-PLATED CARBON STEEL AS STANDARD WITH AN OPTION TO UPGRADE TO TYPE 17-4 STAINLESS PINS.

This page left intentionally blank.

Chapter 2 - Installation Instructions

CHAPTER CONTENTS

General Installation 8
Installer Notice 8
Torque Data Chart 9
Torquing Information & Warnings 9
Step 1: Set The Hooklift Onto The Truck Frame 10
Installation Notice 10
Mounting Kit - PN 129440 11
Step 2: Bolt Mounting Angles and Plates to Base 12
Step 3: Drill Mounting Holes Into Frame Rail 13
Step 4: Bolt Mounting Angles And Plates To Truck Frame 14
Step 5: Install Bumper 15
Step 5A: Bumper Electrical Schematic 16
Step 6: Installation - Valve Bank Assembly - PN 129905 17
Installation - Hydraulic Tank Assembly - PN 130144 18
Step 7: Install PTO and Pump 19
Step 8: Route Hydraulic Hoses 20
Hose Kit - PN 129649 21
3-Section Hose Kit - PN 132321 22
Power Beyond VDM8 Valve 23
NXT52 Controller Assembly PN 131283 24
NXT52 Controller Assembly PN 131283 Parts List 25
Controller Asm, 2-Sect w/VB Asm PN 135331 26
Controller Asm, 2-Sect w/VB Asm PN 135331 Parts List 27
Controller Asm, 3-Sect w VB Asm PN 135332 28
Controller Asm, 3-Sect w VB Asm PN 135332 Parts List 29
NXT52 Controller Asm, 3-Sect w VB Asm PN 131705 30
NXT52 Controller Asm, 3-Sect w VB Asm PN 131705 Part 31
Air Schematic Control Tower Asm PN 132688 32
Air Schematic Control Tower Asm PN 132688 Parts List 33
Step 9: Install Hoist Up Light Sensor - PN 127153 34
Hoist Up Light Sensor - PN 127153 Parts 35
NXT52 Step 10: Apply Chassis Decals - PN 127720 36
NXT40 Step 10A: Apply Chassis Decals - PN 121012 37
Step 11: Fill Reservoir And Activate Hydraulic Flow 38
Step 12: Operate Hooklift 38

General Installation

This chapter is designed to serve as a general guide for the installation of a Stellar® hooklift. Each installation is considered unique so certain portions of this chapter may or may not apply to your direct application. If a question should arise during the installation process, please contact Stellar Customer Service at (800) 321 3741.

PTO and Pump installation instructions are provided by the corresponding manufacturers. For more information on which PTO and Pump fit your application, please contact your local Stellar Distributor or Stellar Customer Service.

⚠WARNING Do not install this hooklift on a chassis not capable of handling the loads imposed on it. Failure to do so may result in serious injury or death.

NOTICE *Do not weld or drill holes into the side wall of the base tubes.*

Hooklift Mounting and Assembly
Study names and locations of the parts and familiarize yourself with the hooklift before starting the assembly. Reading the step-by-step instructions that follow will be helpful.

Assembly
Select an area for assembly that will be large enough to accommodate the completed unit. The surface of the work area should be as level as possible. Use the proper hand tools to ensure proper bolt tightness. Refer to the torque data chart in this chapter for the recommended torque values for different sizes of bolts.

Model Number
Know the model number of the Stellar® Hooklift being mounted. Use this model number whenever referring to the assembly or parts listing pages. The number is stamped on the name plate which is located on the front frame member.

Installer Notice

According to Federal Law (49 cfr part 571), each final-stage manufacturer shall complete the vehicle in such a manner that it conforms to the standards in effect on the date of manufacture of the incomplete vehicle, the date of final completion, or a date between those two dates. This requirement shall, however, be superseded by any conflicting provisions of a standard that applies by its terms to vehicles manufactured in two or more stages.

Therefore, the installer of Stellar® Hooklifts is considered one of the manufacturers of the vehicle. As such a manufacturer, the installer is responsible for compliance with all applicable federal and state regulations. They are required to certify that the vehicle is in compliance with the Federal Motor Vehicle Safety Standards and other regulations issued under the National Traffic and Motor Vehicle Safety Act.

Please reference the Code of Federal Regulations, title 49 - Transportation, Volume 5 (400-999), for further information, or visit http://www.gpoaccess.gov/nara/index.html for the full text of Code of Federal Regulations.

www.nhtsa.gov

www.ecf.gov/current/title-49

Torque Data Chart

		GRADE 5		GRADE 8		GRADE 9
		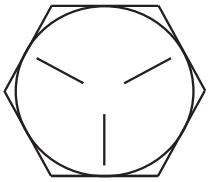		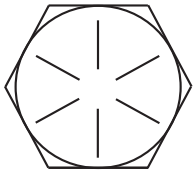		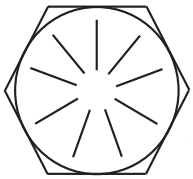
SIZE (DIA - TPI)	**BOLT DIA (INCHES)**	**PLAIN (FT-LB)**	**PLATED (FT-LB)**	**PLAIN (FT-LB)**	**PLATED (FT-LB)**	**PLATED (FT-LB)**
5/16-18	0.3125	17	13	25	18	22
3/8-16	0.3750	31	23	44	33	39
7/16-14	0.4375	49	37	70	52	63
1/2-13	0.5000	75	57	105	80	96
9/16-12	0.5625	110	82	155	115	139
5/8-11	0.6250	150	115	220	160	192
3/4-10	0.7500	265	200	375	280	340
7/8-9	0.8750	395	295	605	455	549
1-8	1.000	590	445	910	680	823
1 1/8-7	1.1250	795	595	1290	965	1167
1 1/4-7	1.2500	1120	840	1815	1360	1646
1 3/8-6	1.3750	1470	1100	2380	1780	2158
1 1/2-6	1.500	1950	1460	3160	2370	2865

Torquing Information & Warnings

⚠WARNING **When using the torque data in the chart, the following rules should be observed:**

- **Bolt manufacturer's** particular specifications should be consulted when provided.
- **Flat washers** of equal strength must be used.
- **All torque measurements** are given in foot-pounds. To convert to inch-pounds, multiply by 12.
- **Torque values** specified are for bolts with residual oils or no special lubricants* applied. If special lubricants of high stress ability, such as Never-Seez compound graphite and oil, molybdenum disulphite, colloidal copper or white lead are applied, multiply the torque values in the charts by the factor .90. The use of Loctite does not affect the torque values listed above.
- **Torque values** for socket-head capscrews are the same as for Grade 8 capscrews.
- **Do not use these values** if a different torque value or tightening procedure is given for a specific application. Torque values listed are for general use only. Check tightness of fasteners periodically.
- **Sheer bolts** are designed to fail under predetermined loads. Always replace shear bolts with identical grade.
- **Fasteners** should be replaced with the same or higher grade. If higher grade fasteners are used, these should only be tightened to the strength of the original.
- **Tighten** plastic insert or crimped steel-type lock nuts to approximately 110 percent of the dry torque values shown in the chart on page 8, applied to the nut, not to the bolt head. Tighten toothed or serrated-type lock nuts to the full torque value.

NOTICE

**Lubricated means coated with a lubricant such as engine oil, or fasteners with phosphate and oil coatings."Dry" means plain or zinc plated without lubrication.Tighten lubricated bolts to approximately 80% of dry bolts.*

Step 1: Set The Hooklift Onto The Truck Frame

- Visually inspect the truck and look for any potential issues. For example: Clearance problems, cross members extending too high, insufficient room in front of the hooklift for tarpers, exhaust manifolds, etc., or insufficient room in the rear to allow for bumper selection.

NOTICE *Stellar Industries recommends allowing 12" behind the start of clear truck frame for installation of a tarping system.*

- Be sure to square the hooklift on the truck frame to allow for proper measurement. The front of the hooklift needs to be at least 2.50" behind the cab or any equipment mounted behind the cab.

NOTICE *On some hooklift models, the jib may extend beyond the front of the base.*

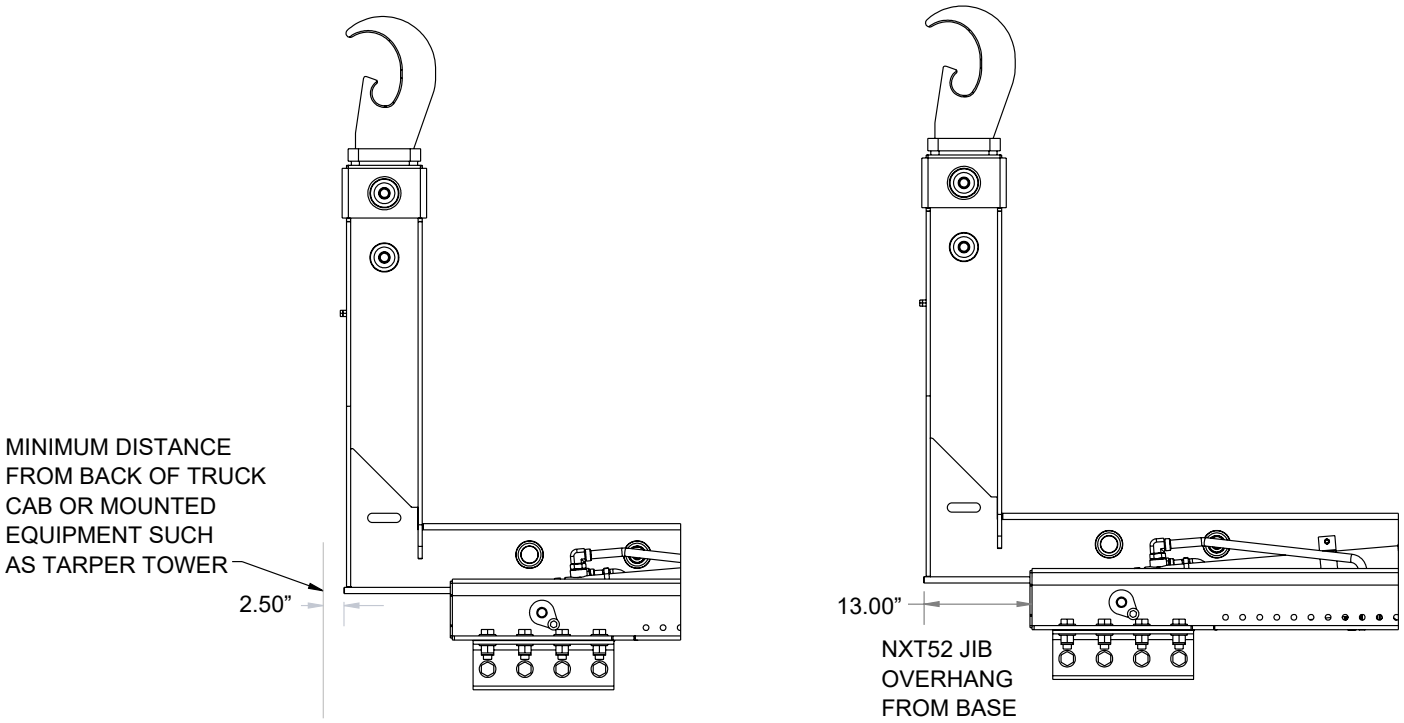

Installation Notice

NOTICE *Every hooklift installation is unique. However, certain guidelines exist that apply to every model. Listed below is a general set of chronological steps that may be followed when installing a Stellar Hooklift. If any questions arise during the installation process, feel free to contact your local dealer or Stellar Customer Service at 800-321-3741.*

www.stellarindustries.com/

Mounting Kit - PN 129440

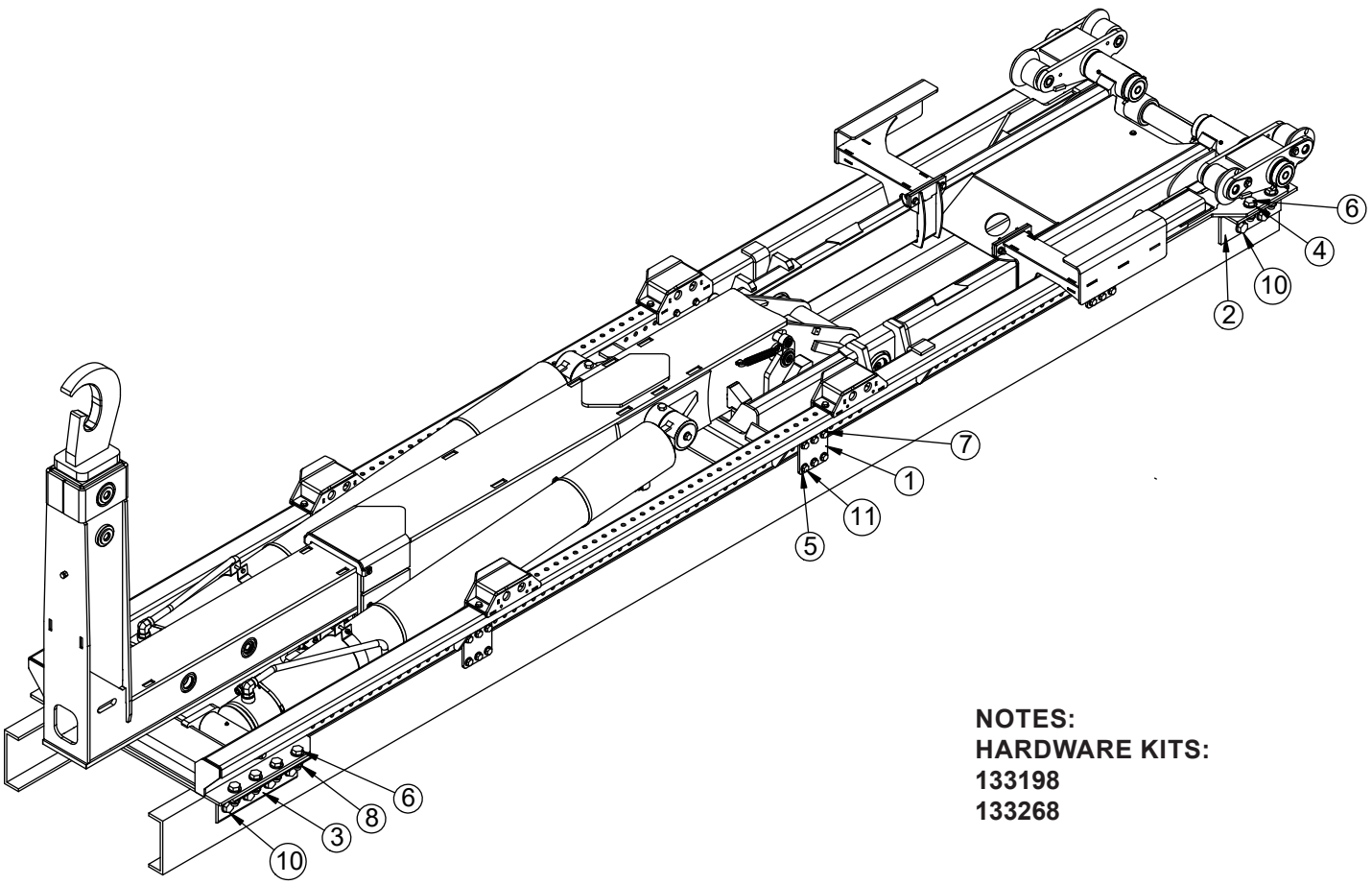

NOTES:
HARDWARE KITS:
133198
133268

PN 129440			
ITEM	**PART**	**DESCRIPTION**	**QTY**
1	129435	PLATE 0.50X6.25X6.00 HOLES	6
2	132326	ANGLE FORMED 4.00X6.00X0.50X12.88 SLOTS	2
3	129502	ANGLE 4.00X6.00X.50WX17.00 SLOTS	2
4	6538	WASHER 1.00 SAE FLAT YELLOW GR8	48
5	5199	CAP SCR 1.00-8X3.00 HHGR8	12
6	6294	NUT 1.00-8 HHGR8 NYLOC	24
7	12169	CAP SCR 1.00-8X3.50 HHGR8	12
8	84053	CAP SCR 0.63-11X2.25 HHGR8	18
9	C5902	WASHER 0.63 SAE FLAT YELLOW GR8	72
10	24868	NUT 0.63-11 HHGR8 NYLOC	36
11	50375	CAP SCR 0.63-11X2.75 HHGR8	18
REV. C			

ITEMS NOT SHOWN		
PART	**DESCRIPTION**	**QTY**
130468	PLATE 0.25X2.00X6.00 HOLES	6
130469	PLATE 12GAX2.00X6.00 HOLES	6

Step 2: Bolt Mounting Angles and Plates to Base

- Bolt each tie-down angle to the underside of each mounting plate located on the outside of the main rails of the base (both sides):

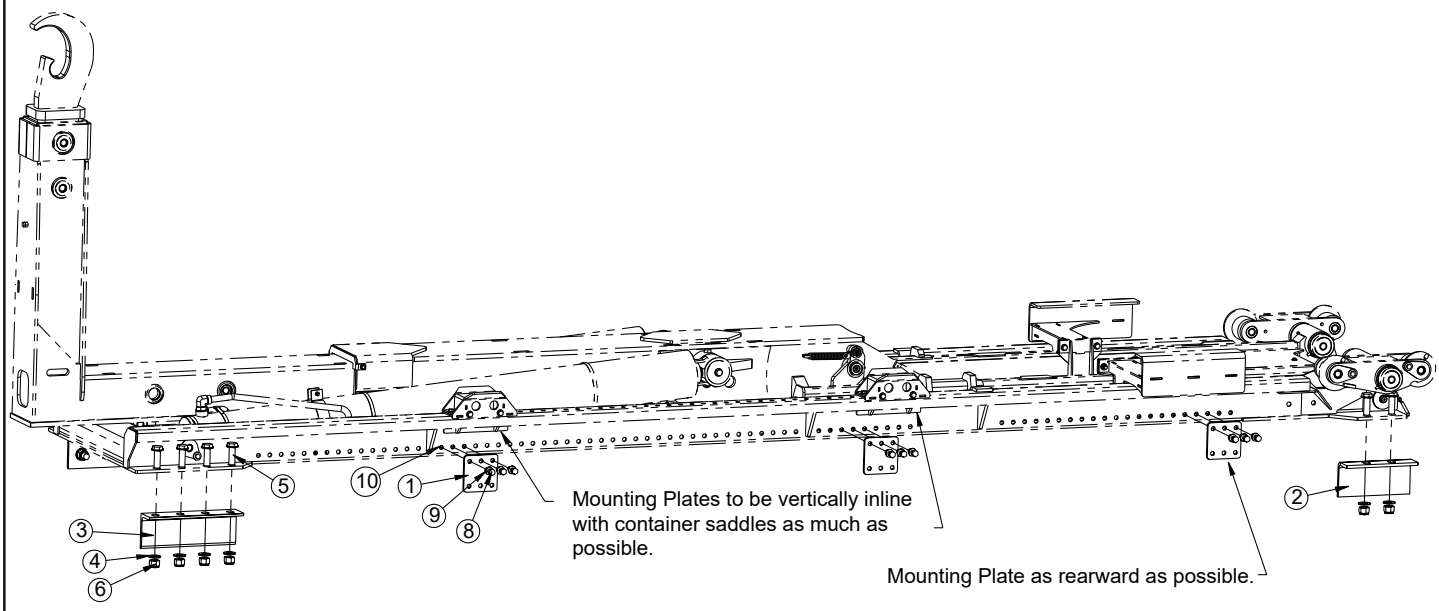

PN 129440			
ITEM	**PART**	**DESCRIPTION**	**QTY**
1	129435	PLATE 0.50X6.25X6.00 HOLES	3
2	132326	ANGLE FORMED 4.00X6.00X0.50X12.88 SLOTS	1
3	129502	ANGLE 4.00X6.00X.50WX17.00 SLOTS	1
4	6538	WASHER 1.00 SAE FLAT YELLOW GR8	12
5	5199	CAP SCR 1.00-8X3.00 HHGR8	6
6	6294	NUT 1.00-8 HHGR8 NYLOC	6
7	84053	CAP SCR 0.63-11X2.25 HHGR8	9
8	C5902	WASHER 0.63 SAE FLAT YELLOW GR8	18
9	24868	NUT 0.63-11 HHGR8 NYLOC	9
REV. C			

NOTES:
BOLT FRONT AND REAR ANGLE BRACKETS TO THE UNDERSIDE OF EACH PLATE LOCATED ON THE OUTSIDE OF THE MAIN RAILS OF THE BASE (BOTH SIDES).

BOLT MOUNTING PLATES (3 PER SIDE) TO Z-RAILS.

PLATES TO BE MOUNTED UNDER CONTAINER SADDLES AND AS FAR TO THE REAR OF THE LOADER AS POSSIBLE.

Step 3: Drill Mounting Holes Into Frame Rail

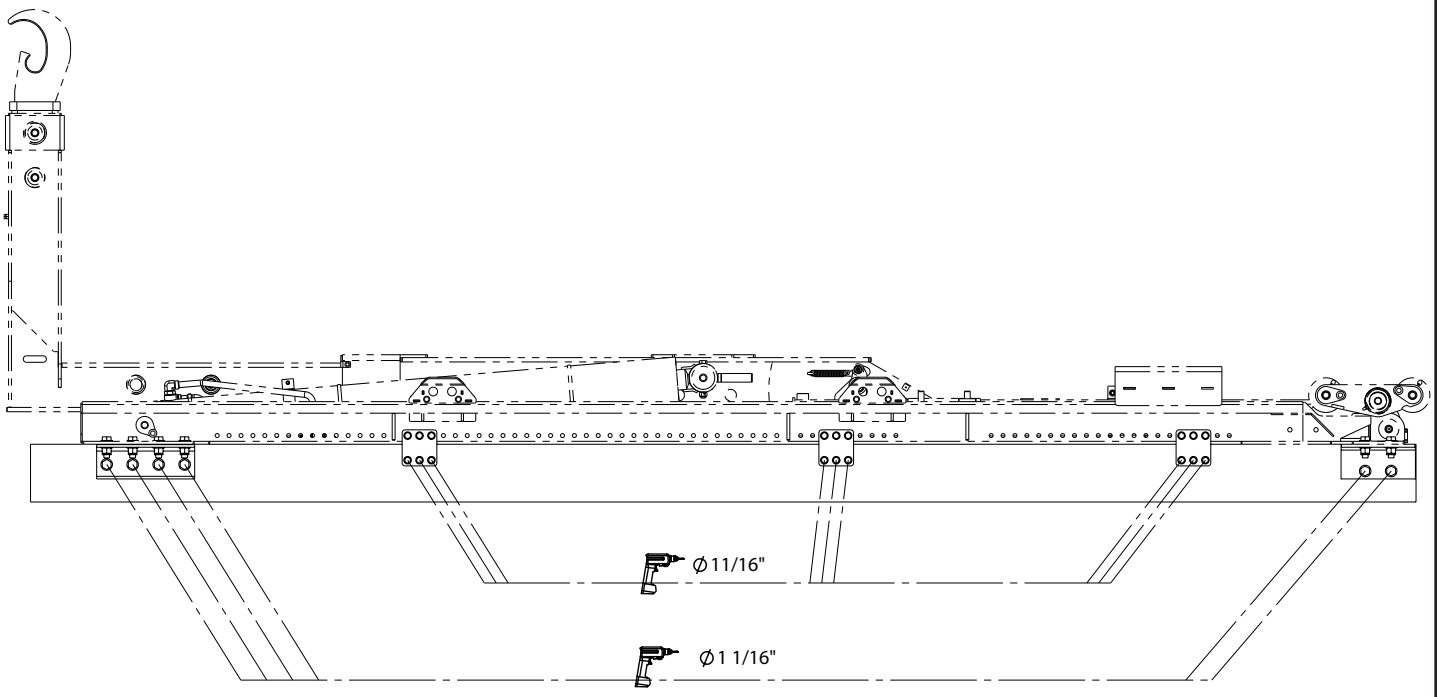

Step 4: Bolt Mounting Angles And Plates To Truck Frame

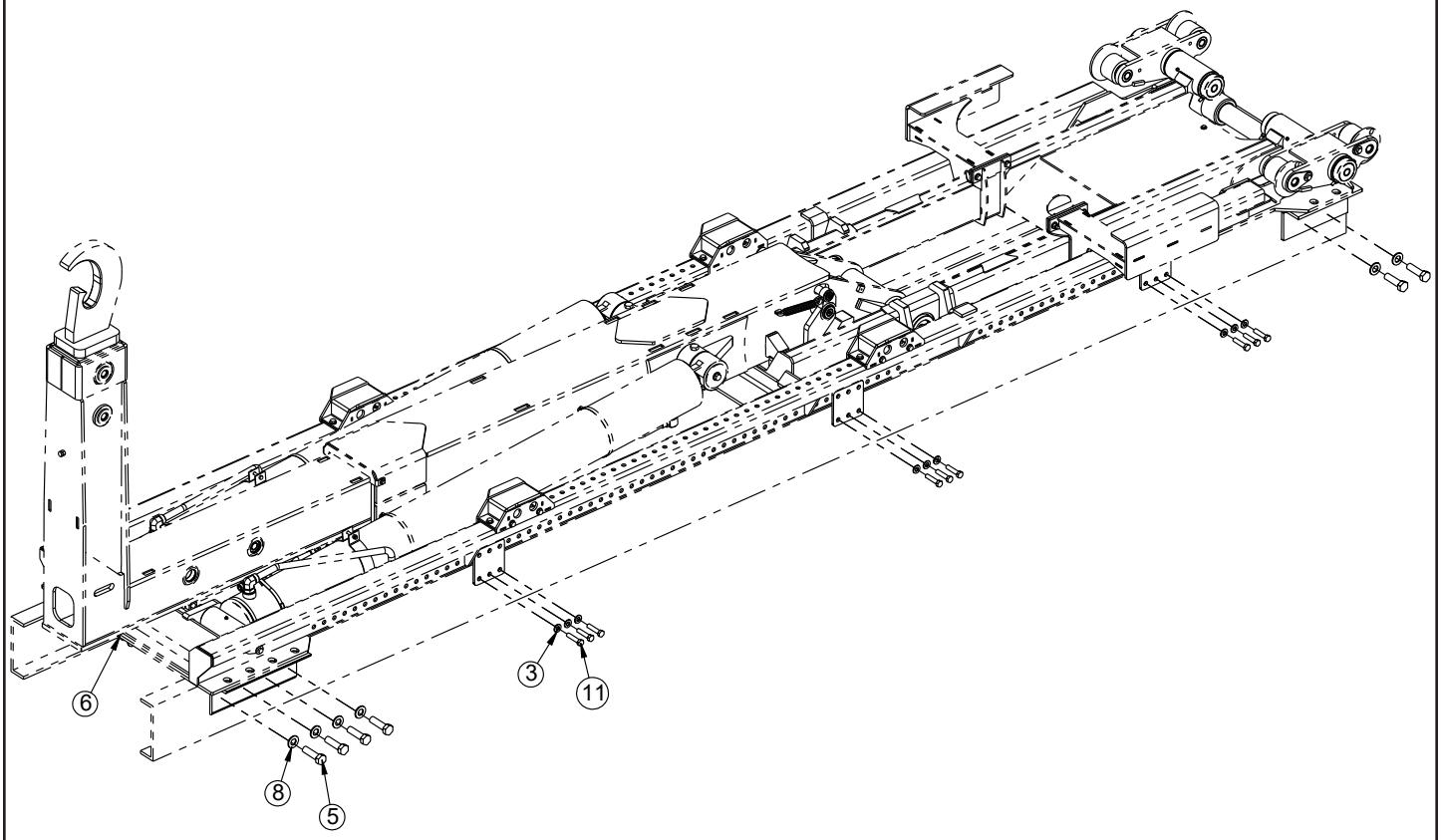

PN 129440			
ITEM	**PART**	**DESCRIPTION**	**QTY**
1	129435	PLATE 0.50X6.25X6.00 HOLES	3
2	132326	ANGLE FORMED 4.00X6.00X0.50X12.88 SLOTS	1
3	129502	ANGLE 4.00X6.00X.50WX17.00 SLOTS	1
4	6538	WASHER 1.00 SAE FLAT YELLOW GR8	12
5	6294	NUT 1.00-8 HHGR8 NYLOC	6
6	12169	CAP SCR 1.00-8X3.50 HHGR8	6
7	C5902	WASHER 0.63 SAE FLAT YELLOW GR8	18
8	24868	NUT 0.63-11 HHGR8 NYLOC	9
9	50375	CAP SCR 0.63-11X2.75 HHGR8	9
REV. C			

NOTES:
SEE TORQUE CHART AT BEGINNING OF CHAPTER FOR PROPER BOLT TIGHTNESS.

Step 5: Install Bumper

NOTE:
REAR MOUNTING ANGLE WILL MOUNT ON OUTSIDE OF BUMPER SHEAR PLATES AS SHOWN.

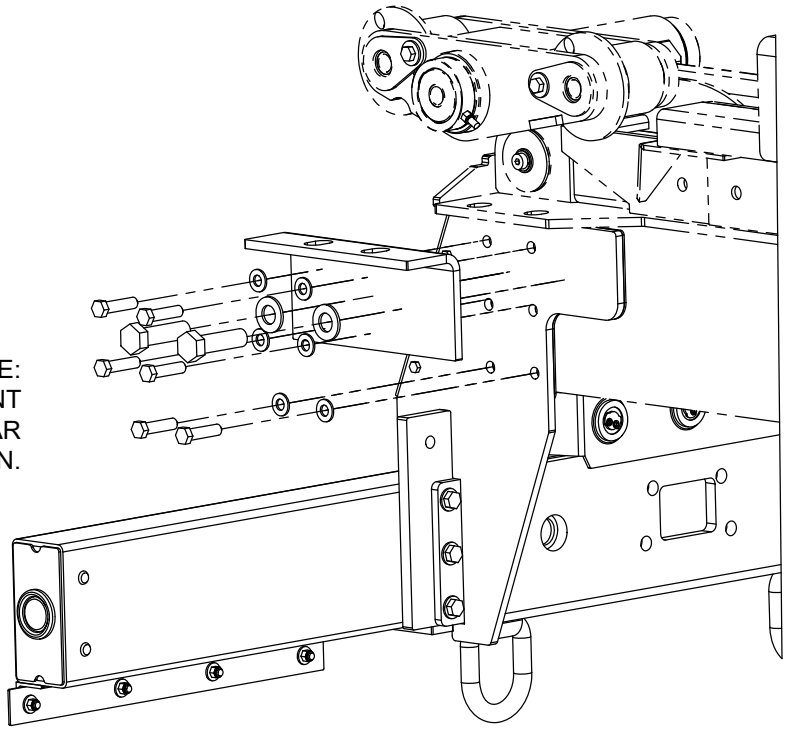

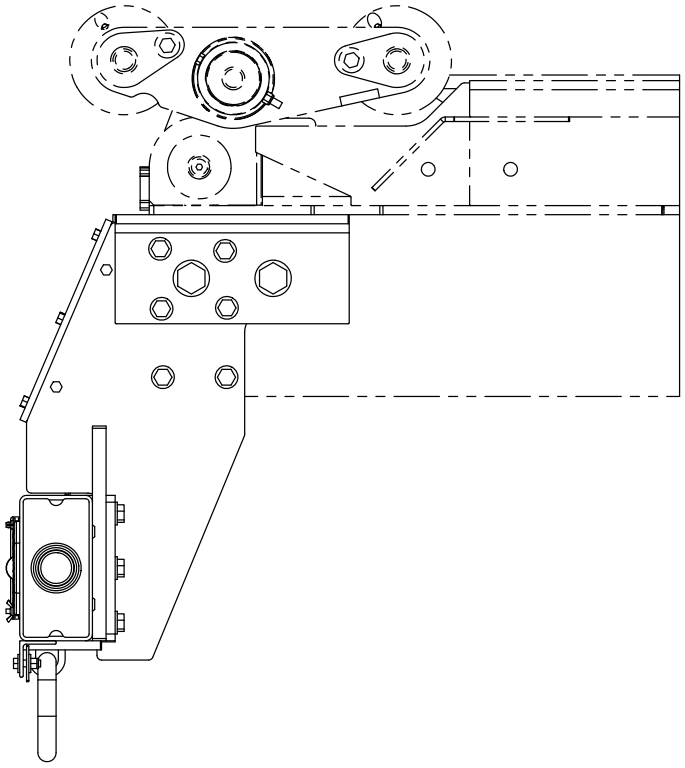

NOTE:
ALL HARDWARE FOR BOTH MOUNTING KIT AND BUMPER SHEAR PLATES MUST BE USED WITH BUMPER INSTALLATION AS SHOWN.

NOTICE ***SEE NHTSA (NATIONAL HIGHWAY TRUCK SAFETY ADMINISTRATION) REGULATIONS FOR ACCEPTABLE PLACEMENT. THIS BUMPER WILL MOUNT FLUSH WITH THE REAR OF THE HOOKLIFT.***

Step 5A: Bumper Electrical Schematic

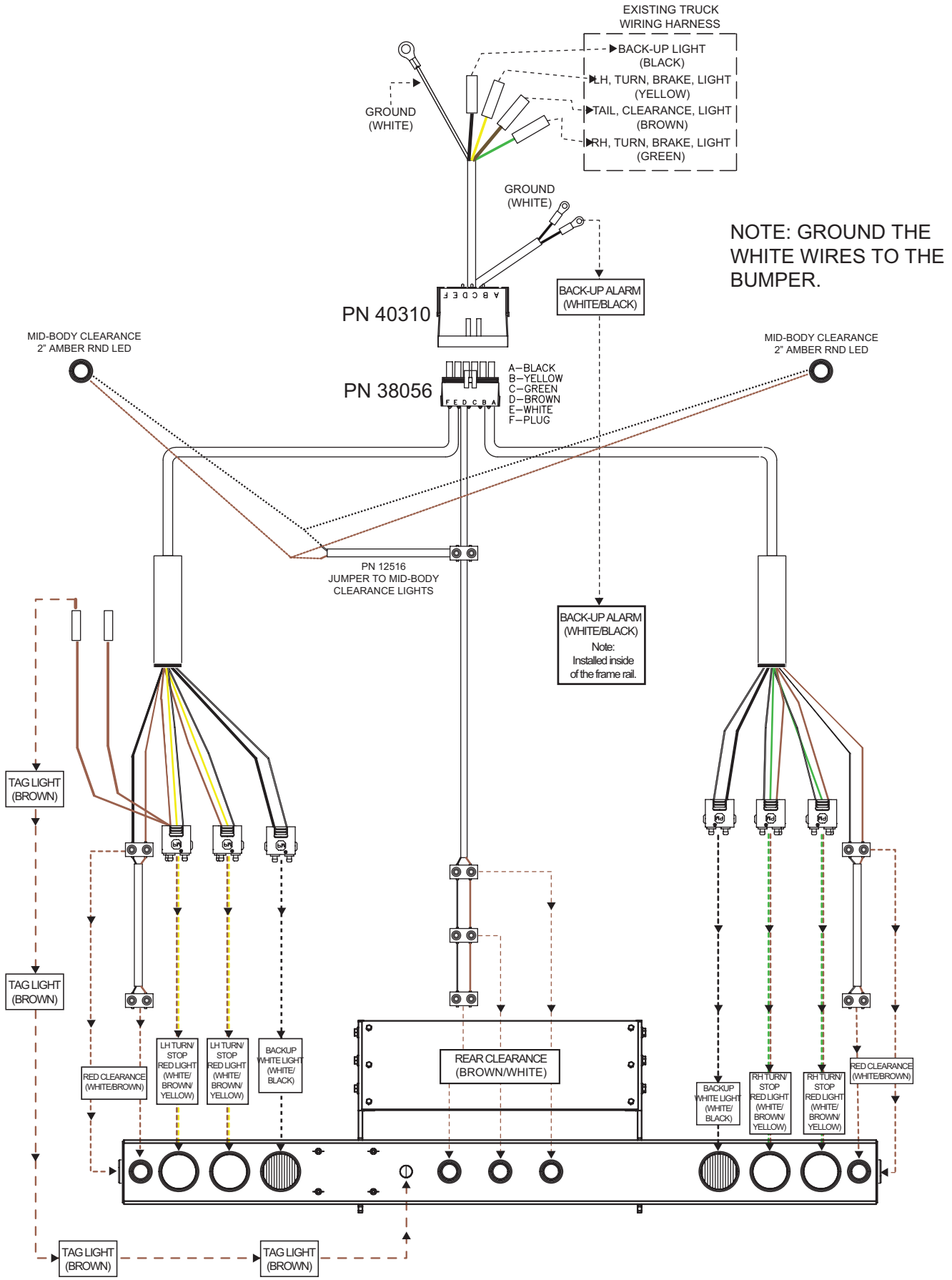

Step 6: Installation - Valve Bank Assembly - PN 129905

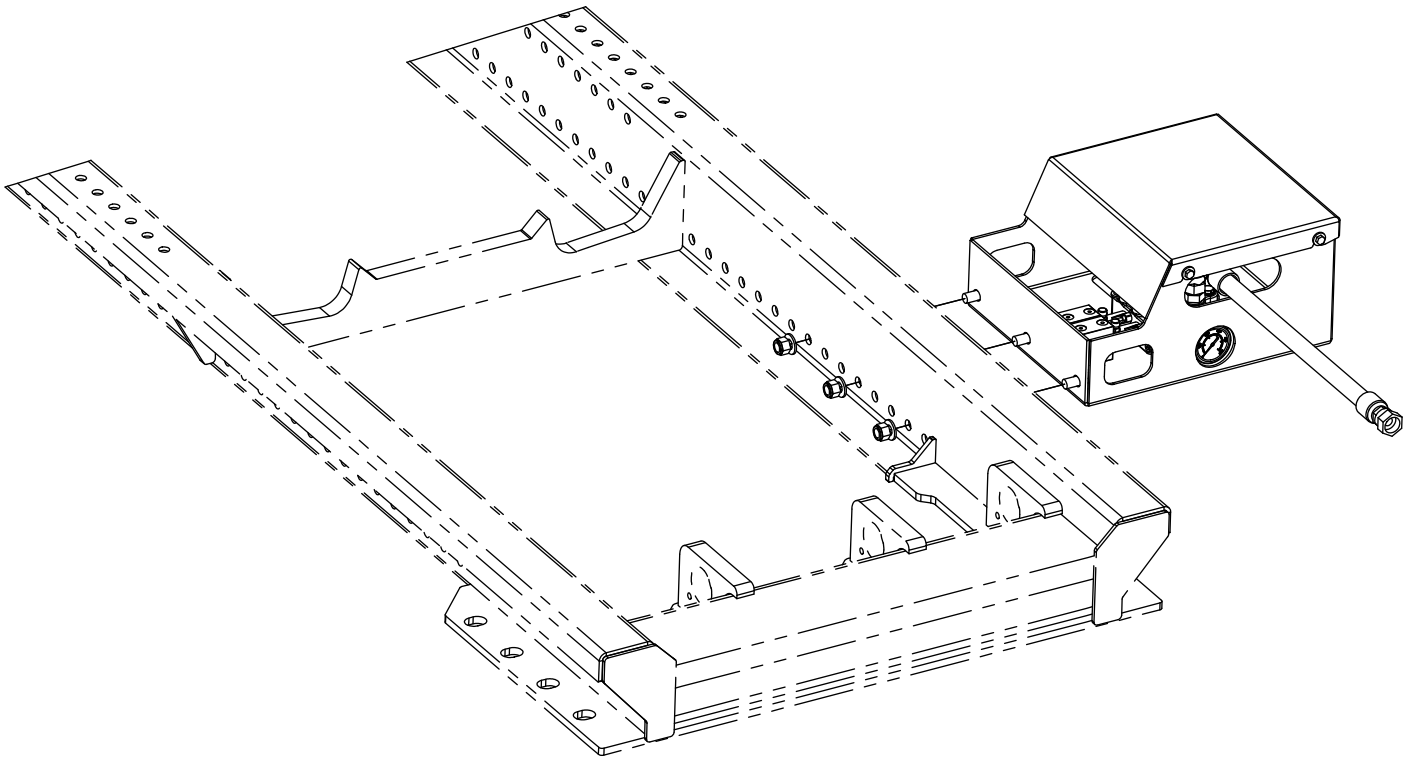

NOTES:

BOLT VALVE BANK WELDMENT TO BASE Z-RAIL WITH PROVIDED HARDWARE THROUGH PRE-DRILLED HOLES.

CAN BE MOUNTED ON CURB SIDE OR STREET SIDE.

Installation - Hydraulic Tank Assembly - PN 130144

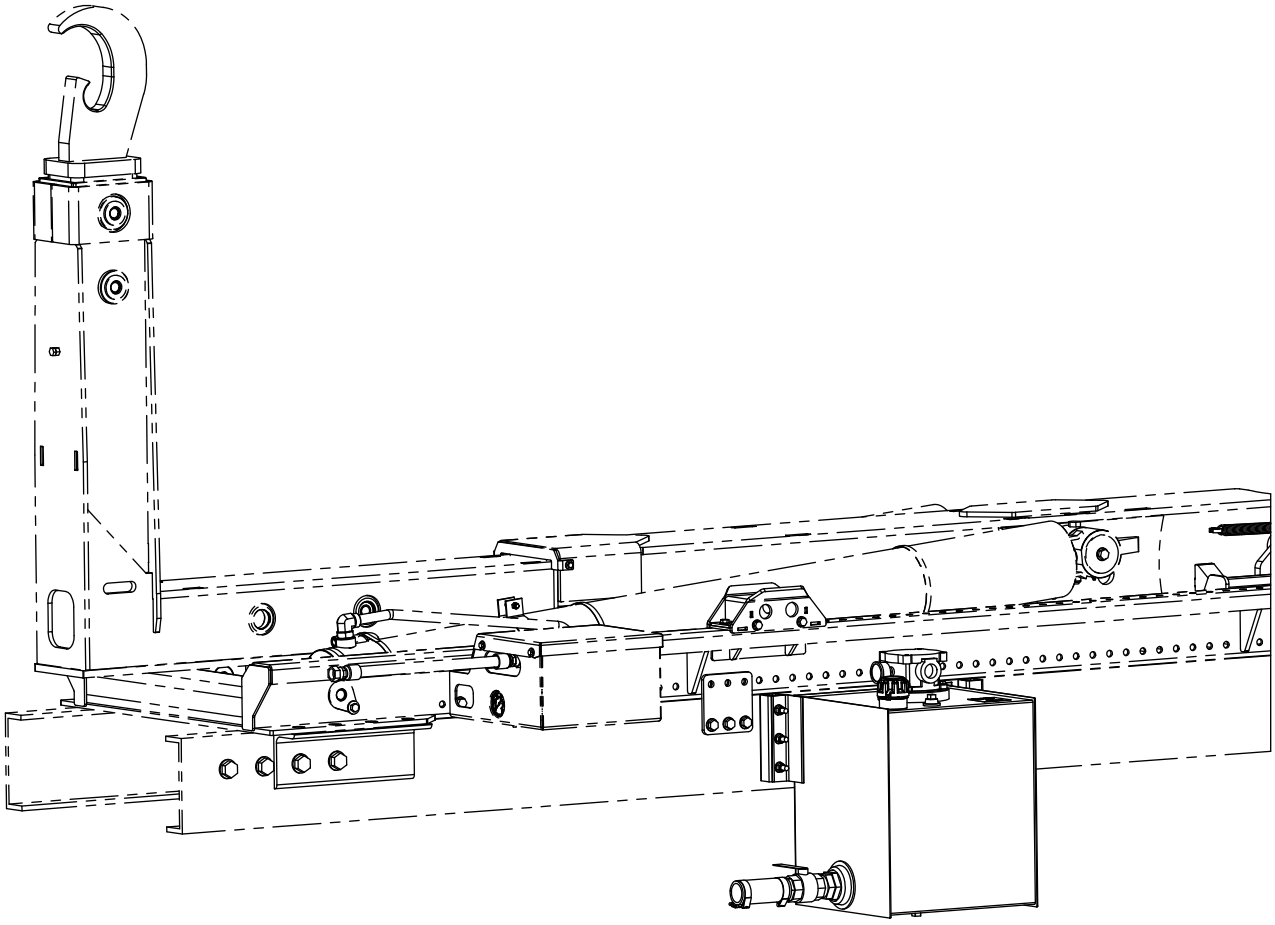

NOTES:
THE TOP OF RESERVOIR SHOULD NOT BE ABOVE THE TRUCK FRAME.

BEFORE DRILLING AND BOLTING TO FRAME, CONFIRM ADEQUATE ROOM FOR HYDRAULIC HOSE ROUTING.

HOLES ARE PRE-DRILLED IN HYDRAULIC TANK BRACKETS, MARK LOCATIONS, DRILL QTY 6, 5/8 HOLES THROUGH FRAME.

BOLT TANK TO TRUCK FRAME USING PROVIDED HARDWARE.

CAN BE MOUNTED ON CURB SIDE OR STREET SIDE

Step 7: Install PTO and Pump

- Before installing the pump to the PTO, always check the direction of the PTO output shaft to determine which direction the hydraulic pump needs to rotate to operate the equipment. If this is not determined prior to installing the hydraulic pump, the hydraulic pump may rotate in the incorrect direction and damage the front shaft seal.

PTO Direction of Rotation Tip:

Viewed by standing at the rear of the vehicle, looking forward at the PTO shaft, with the PTO shaft pointing toward the rear of the vehicle:

P.T.O.	Driven Equipment
Rotates Opposite Engine (looks "clockwise)	Driven equipment must rotate counterclockwise (also called left-hand rotation, "A" for anti-clockwise or C.C.W. for counter clockwise).
Rotates With Engine (looks "counterclockwise")	Driven equipment must rotate clockwise (also called right-hand rotation or "C" for clockwise).

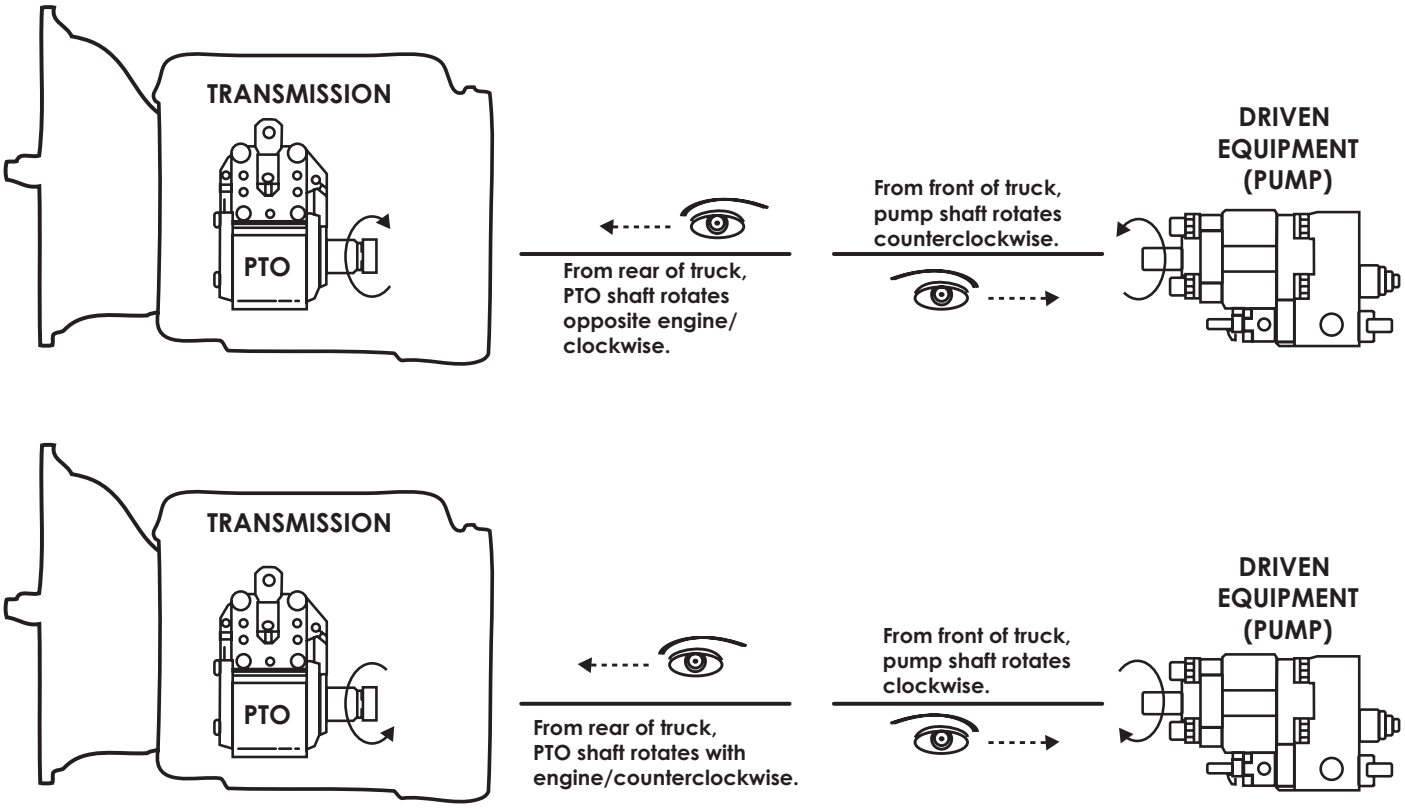

NOTICE

Remember that the PTO is specified by looking from the rear of the truck to the front of the truck. The driven equipment (pump) is specified by looking from the front of the truck.

Use the brand specific PTO / Pump installation instructions. If the directions are not quite clear, contact Stellar® Customer Service or consult with a hydraulic specialty house or company prior to installation.

www.stellarindustries.com/support

Step 8: Route Hydraulic Hoses

1. Route hose line from the reservoir to the pump (See hose kit drawing for details).
2. Route hose line from the pump to the valve bank (See hose kit drawing for details).
3. Route hose line from the valve bank to the reservoir (See hose kit drawing for details).
4. Route hose line from the valve bank and the hooklift (See hose kit drawing for details).

Notes on hose line routing:

- Protect these lines with hose wrap when necessary.
- Keep these lines away from sharp edges.
- Keep these lines away from the exhaust or other temperature extreme items.
- Keep these lines away from the driveshaft or other moving items.

Hose Kit - PN 129649

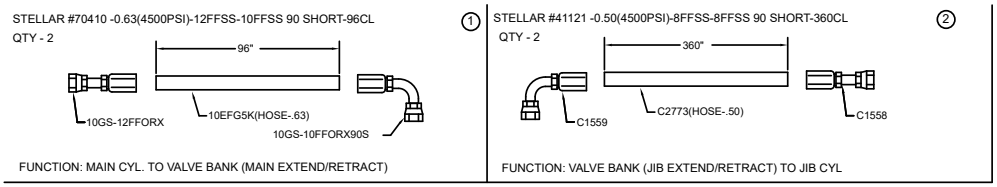

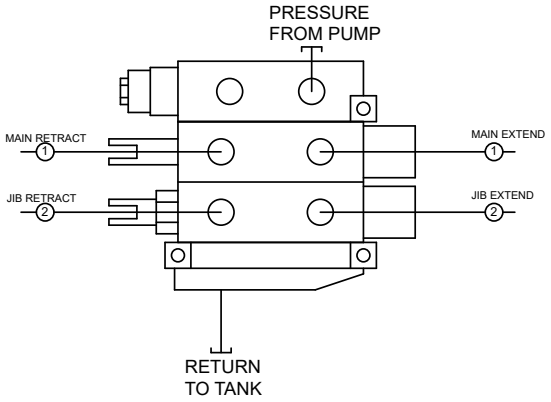

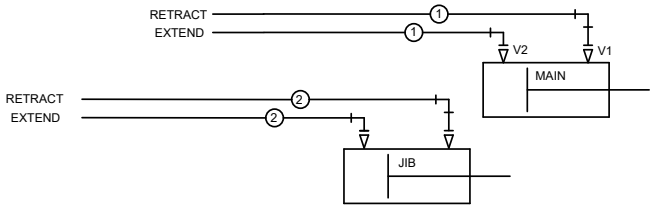

NOTE: SYSTEM PRESSURE IS 4500 P.S.I.

PN 129649			
ITEM	**PART**	**DESCRIPTION**	**QTY**
01	70410	HOSE 0.63(4500PSI)-12FFSS-10FFSS 90 SHORT-96CL	2
02	41121	HOSE 0.50(4500PSI)-8FFSS-8FFSS 90 SHORT-360CL	2
REV. A			

3-Section Hose Kit - PN 132321

STELLAR #70410 -0.63(4500PSI)-12FFSS-10FFSS 90 SHORT-96CL ①
QTY - 2

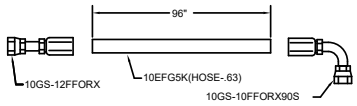

FUNCTION: MAIN CYL. TO VALVE BANK (MAIN EXTEND/RETRACT)

STELLAR #41121 -0.50(4500PSI)-8FFSS-8FFSS 90 SHORT-360CL ②
QTY - 2

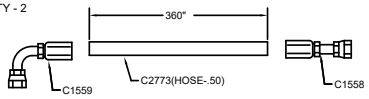

FUNCTION: VALVE BANK (JIB EXTEND/RETRACT) TO JIB CYL

STELLAR #132322 -0.25(3000PSI)-6MFS-6FFSS 90 SHORT-360CL ③
QTY - 2

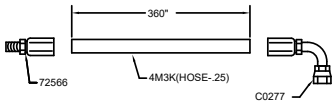

FUNCTION: HOOK PORT TUBE TO VALVE BANK (HOOK EXTEND/RETRACT)

STELLAR #130159 -HOSE TRACK NXT52 ④
QTY - 1



NOTE: BOTH HOOK HOSES TO STICK OUT 15" FROM EACH END OF HOSE TRACK

STELLAR #132323 -0.25(3000PSI)-6MFS-6FFSS-93CL ⑤
QTY - 2

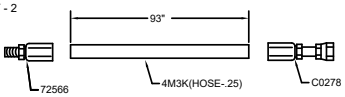

FUNCTION: HOOK CYL. TO PORT TUBE (HOOK EXTEND/RETRACT)

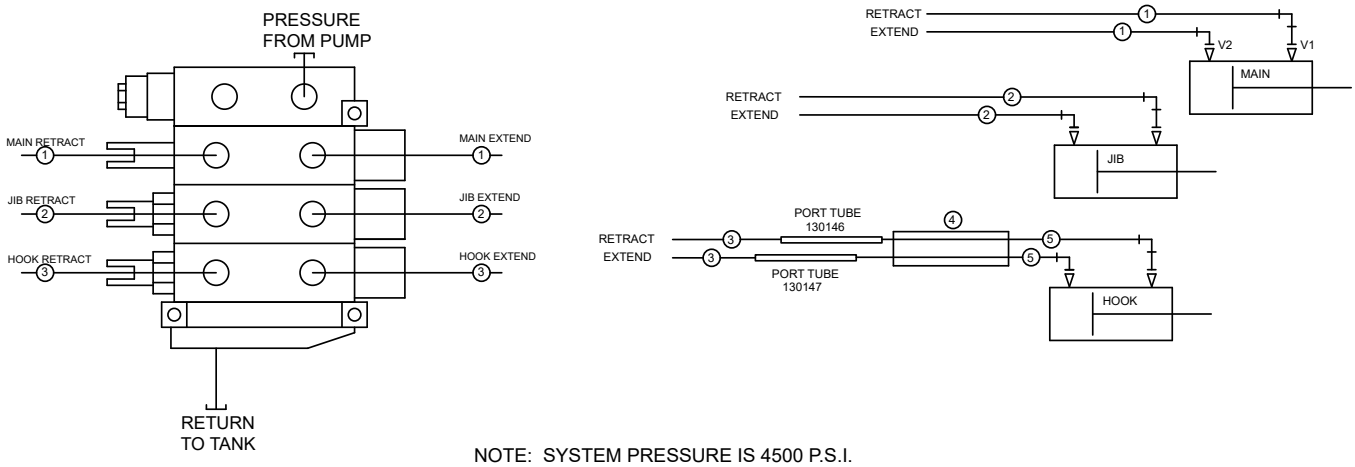

NOTE: SYSTEM PRESSURE IS 4500 P.S.I.

PN 132321			
ITEM	**PART**	**DESCRIPTION**	**QTY**
01	70410	HOSE 0.63(4500PSI)-12FFSS-10FFSS 90 SHORT-96CL	2
02	41121	HOSE 0.50(4500PSI)-8FFSS-8FFSS 90 SHORT-360CL	2
03	132322	HOSE 0.25(3000PSI)-6MFS-6FFSS 90 SHORT-360CL	2
04	130159	HOSE TRACK NXT52	1
05	132323	HOSE 0.25(3000PSI)-6MFS-6FFSS-93CL	2
REV. INITIAL RELEASE			

Power Beyond VDM8 Valve

These instructions are intended for correct installation of power beyond on a Salami VDM8 valve bank. If any hydraulic component is integrated after this valve the power beyond must be installed correctly, or serious damage may incur to the hydraulic system.

1. Remove cover / access plug to reveal the power beyond access point. Can also be used as the Return / Tank port.

2. Install one (either 1/2” or 3/8”) plug from kit number:122069 into lower portion of cavity to activate the power beyond feature. Use thread sealer. (Tape sealers not recommended.)

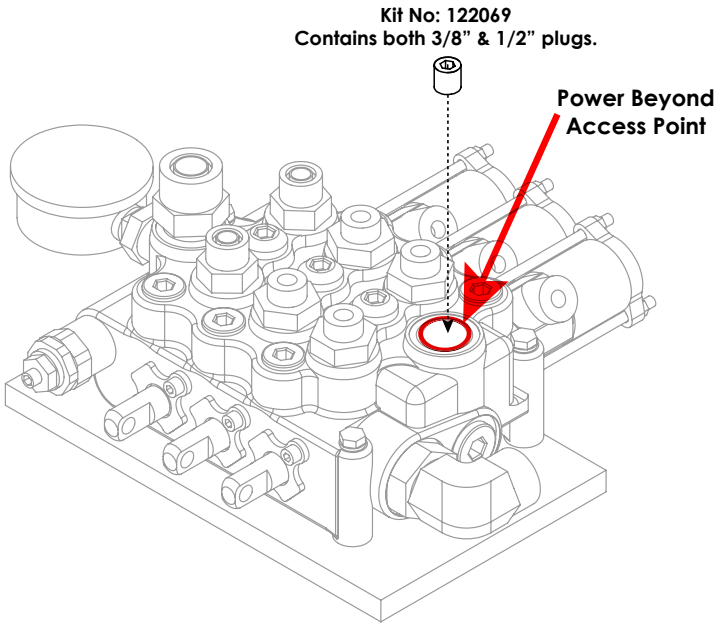

3. The Power Beyond feature is now activated and will divert oil to alternate system via the port shown.

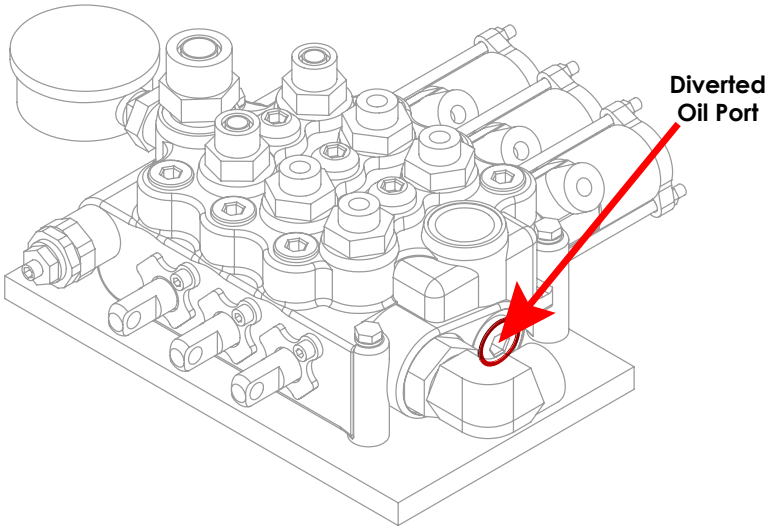

NOTES:

- **THE RETURN / TANK LINE MUST BE CONNECTED TO THE TOP OR THE SIDE PORT, LABELED “T”.**
- **USING THE RETURN LINE TO RUN AUXILIARY EQUIPMENT WILL DIRECTLY RESULT IN A FAILURE, AND WILL NOT IN ANY CIRCUMSTANCE, BE COVERED UNDER WARRANTY.**
- **A STANDARD STELLAR® HOOKLIFT WILL HAVE 6 HYDRAULIC LINES ATTACHED TO THE VALVE. WITH POWER BEYOND ACTIVATED, THEY WILL HAVE 7 HYDRAULIC LINES ATTACHED TO THE VALVE.**

NXT52 Controller Assembly PN 131283

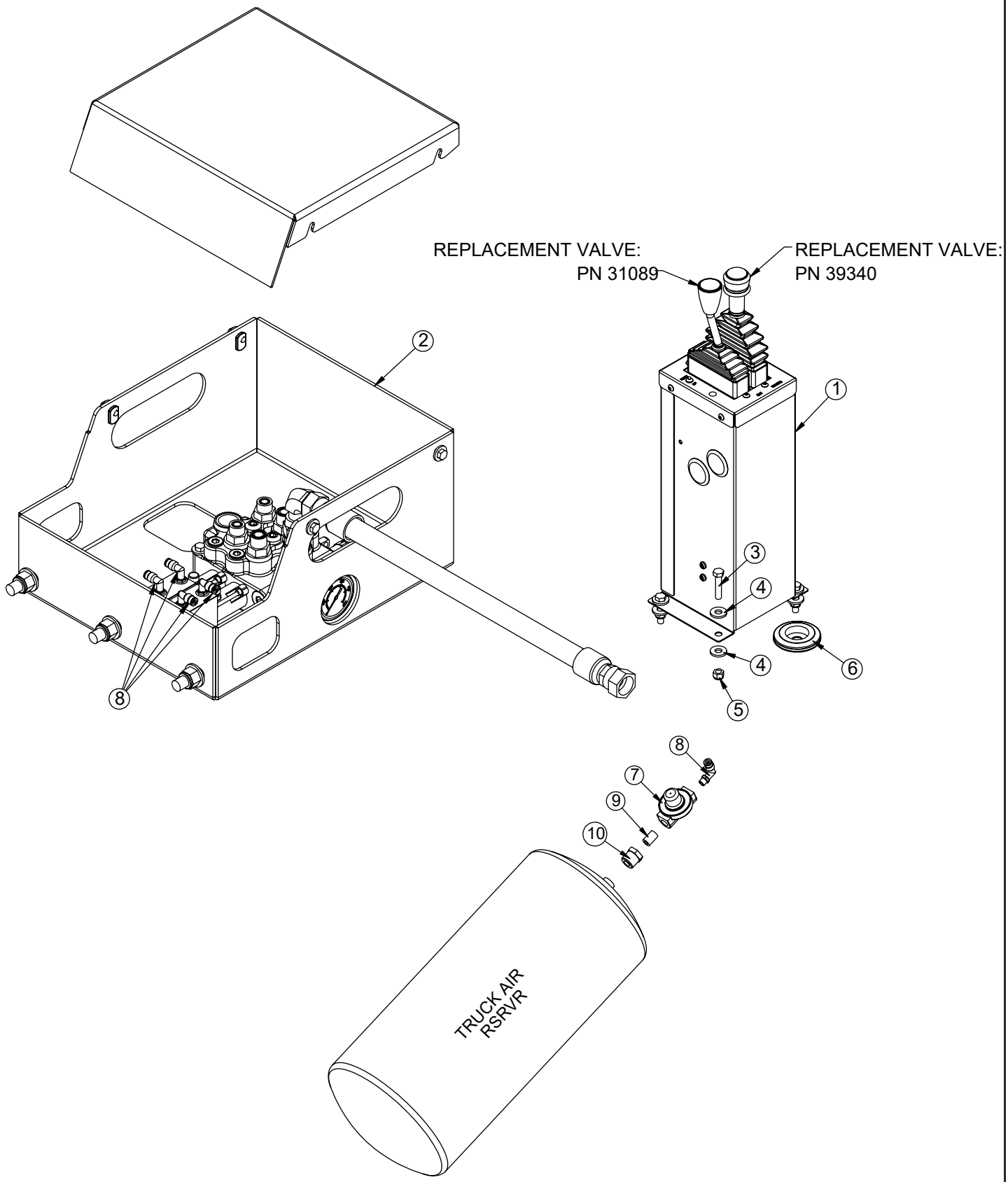

NXT52 Controller Assembly PN 131283 Parts List

PN 131283			
ITEM	**PART**	**DESCRIPTION**	**QTY**
1	129905	VB ASM 2S VDM8 NXT52	1
2	0486	CAP SCR 0.31-18X1.50 HHGR5	4
3	0343	WASHER 0.31 USS FLAT	8
4	0342	NUT 0.31-18 HHGR5 NYLOC	4
5	16948	GROMMET 2.50ODX1.50GDX0.13X0.56ID	1
6	35211	PTO AIR REGULATOR 378414	1
7	45687	FTG 4-2 MP-PTC 90 BRASS 1169X4S	5
8	C5934	FTG 4-4XCLOSE MP-MP NIPPLE STRAIGHT BLK	1
9	C1065	BUSHING 0.50X0.25 BLK	1

ITEMS NOT SHOWN		
PART	**DESCRIPTION**	**QTY**
132702	ELECTRICAL KIT AIR NXT 52	1
132688	AIR SCHEM CONTROL TOWER ASM NXT52	1

NOTES:
ITEMS 3-10 INCLUDED WITH 131279

NXT40 Controller Asm, 2-Sect w/VB Asm PN 135331

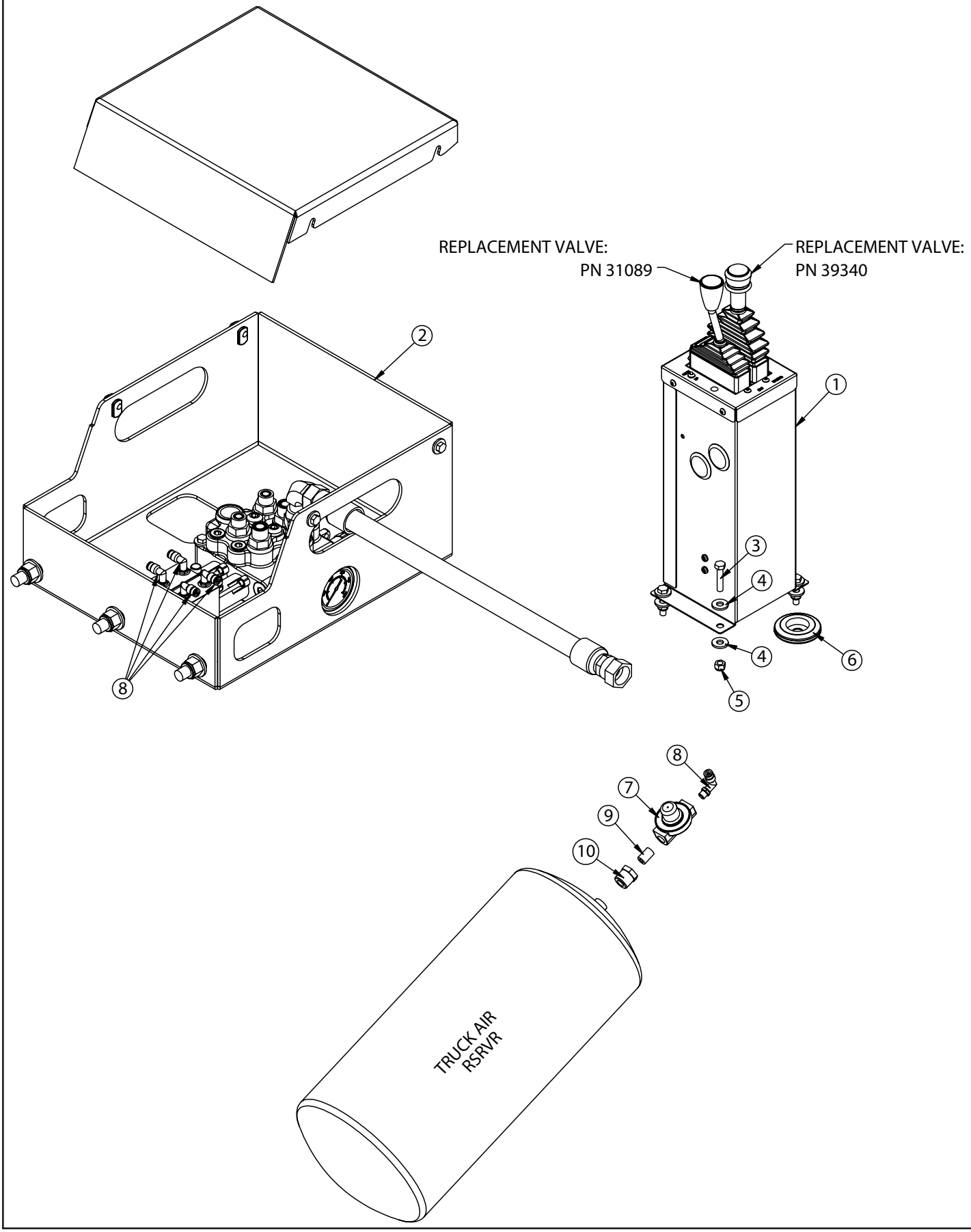

NXT40 Controller Asm, 2-Sect w/VB Asm PN 135331

PARTS LIST: 135331			
ITEM	**PART**	**DESCRIPTION**	**QTY**
1	131279	CONTROLLER ASM AIR 2 SECT NXT52	1
2	135329	VB ASM 2S VDM8 NXT40	1
3	0486	CAP SCR 0.31-18X1.50 HHGR5	4
4	0343	WASHER 0.31 USS FLAT	8
5	0342	NUT 0.31-18 HHGR5 NYLOC	4
6	16948	GROMMET 2.50ODX1.50GDX0.13X0.56ID	1
7	35211	PTO AIR REGULATOR 378414	1
8	45687	FTG 4-2 MP-PTC 90 BRASS 1169X4S	5
9	C5934	FTG 4-4XCLOSE MP-MP NIPPLE STRAIGHT BLK	1
10	C1065	BUSHING 0.50X0.25 BLK	1
REV. INITIAL RELEASE			

ITEMS NOT SHOWN		
PART	**DESCIPTION**	**QTY**
132702	ELECTRICAL KIT AIR NXT 52	
132688	AIR SCHEM CONTROL TOWER ASM NXT52	

NOTES:
ITEMS 3-10 INCLUDED WITH 131279.

NXT40 Controller Asm, 3-Sect w VB Asm PN 135332

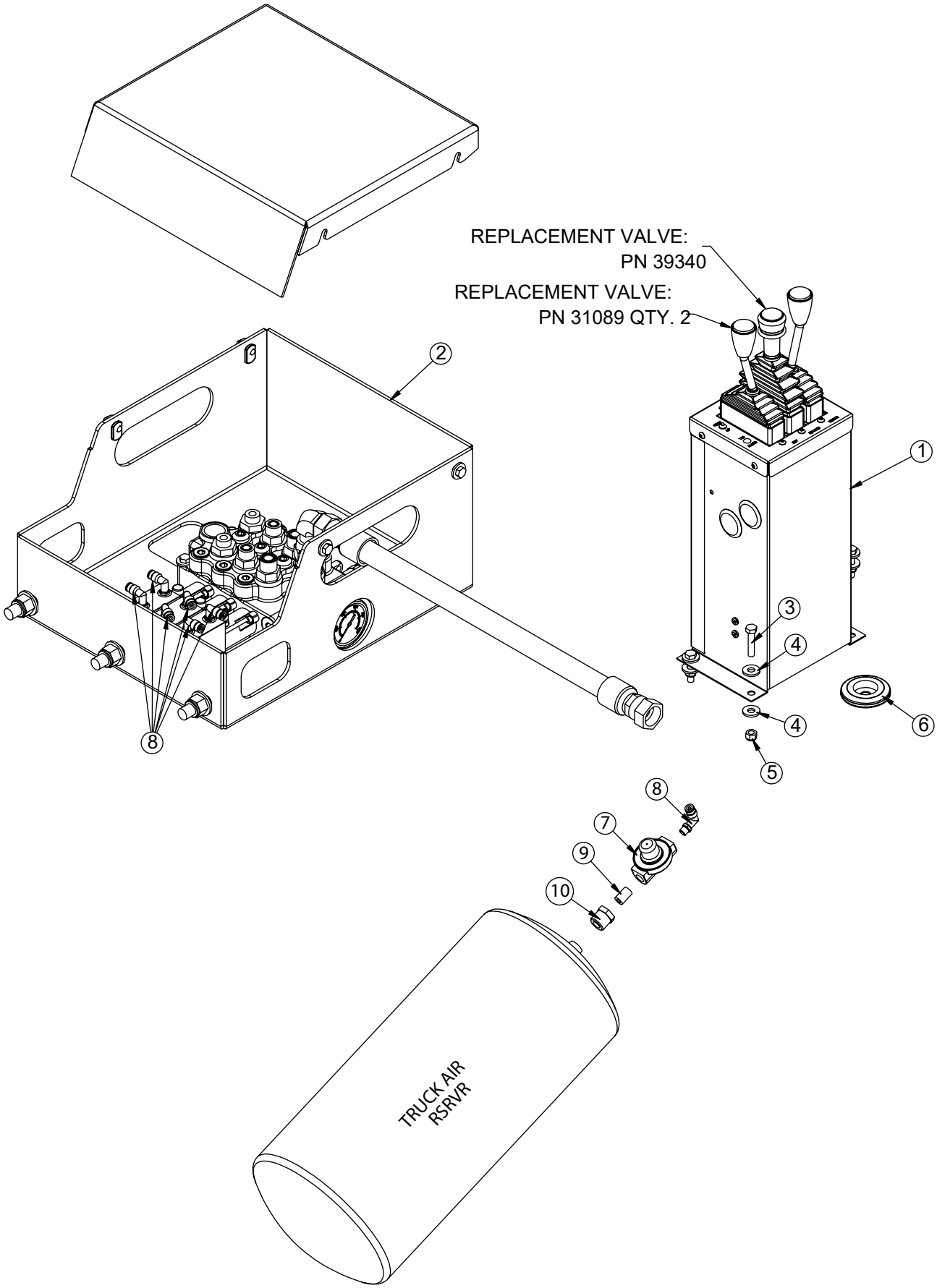

NXT40 Controller Asm, 3-Sect w VB Asm PN 135332

PARTS LIST: 131705			
ITEM	**PART**	**DESCRIPTION**	**QTY**
1	131707	CONTROLLER ASM AIR 3 SECT NXT52	1
2	135330	VB ASM 3S VDM8 NXT40	1
3	0486	CAP SCR 0.31-18X1.50 HHGR5	4
4	0343	WASHER 0.31 USS FLAT	8
5	0342	NUT 0.31-18 HHGR5 NYLOC	4
6	16948	GROMMET 2.50ODX1.50GDX0.13X0.56ID	1
7	35211	PTO AIR REGULATOR 378414	1
8	45687	FTG 4-2 MP-PTC 90 BRASS 1169X4S	7
9	C5934	FTG 4-4XCLOSE MP-MP NIPPLE STRAIGHT BLK	1
10	C1065	BUSHING 0.50X0.25 BLK	1
REV. INITIAL RELEASE			

ITEMS NOT SHOWN		
PART	**DESCRIPTION**	**QTY**
132702	ELECTRICAL KIT AIR NXT 52	1
132688	AIR SCHEM CONTROL TOWER ASM NXT52	1

NOTE:
ITEMS 3-10 INCLUDED WITH 131707.

NXT52 Controller Asm, 3-Sect w VB Asm PN 131705

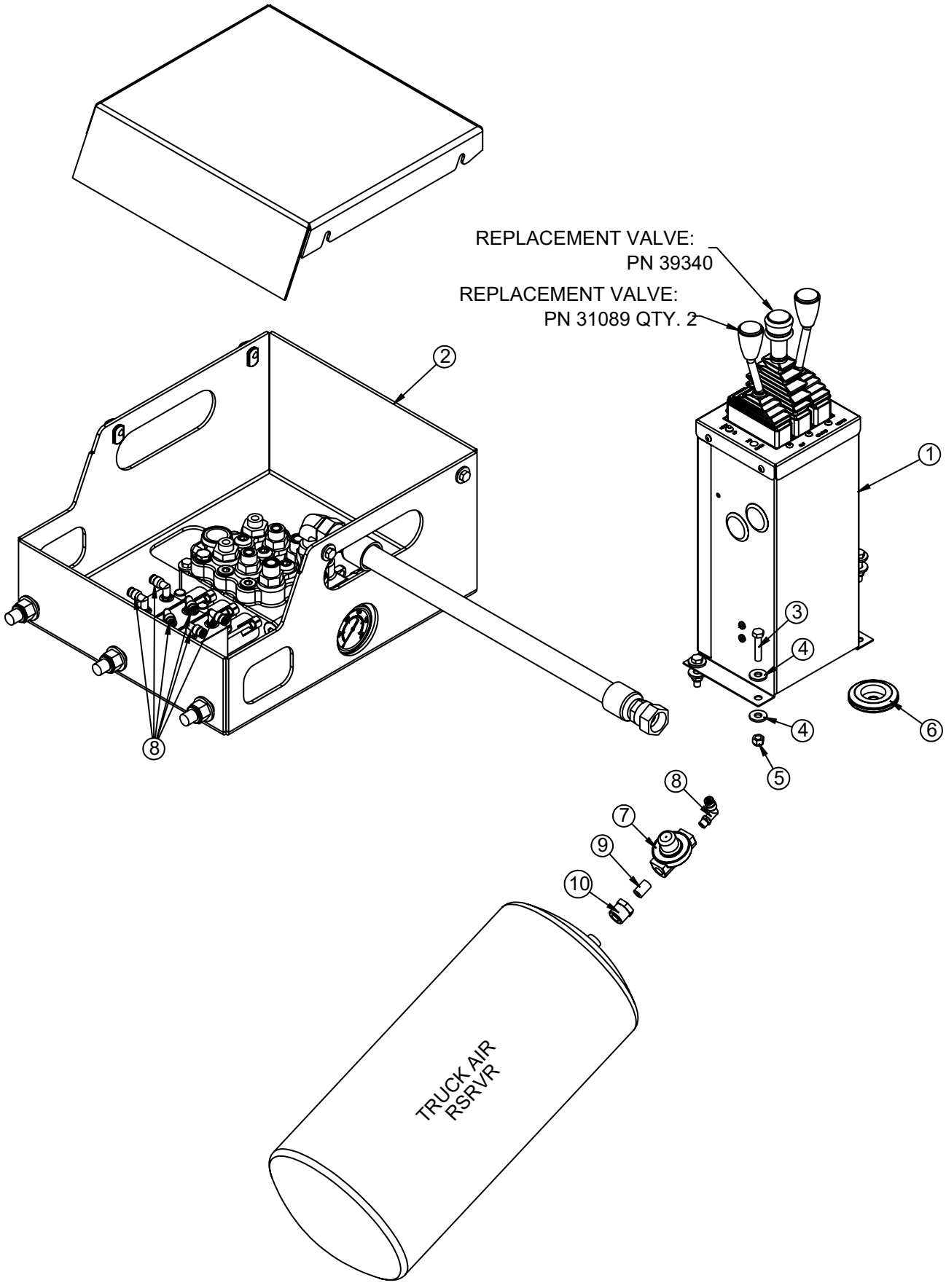

NXT52 Controller Asm, 3-Sect w VB Asm PN 131705 Part

PN 131705			
ITEM	**PART**	**DESCRIPTION**	**QTY**
1	131707	CONTROLLER ASM AIR 3 SECT NXT52	1
2	132329	VB ASM 3S VDM8 NXT52	1
3	0486	CAP SCR 0.31-18X1.50 HHGR5	4
4	0343	WASHER 0.31 USS FLAT	8
5	0342	NUT 0.31-18 HHGR5 NYLOC	4
6	16948	GROMMET 2.50ODX1.50GDX0.13X0.56ID	1
7	35211	PTO AIR REGULATOR 378414	1
8	45687	FTG 4-2 MP-PTC 90 BRASS 1169X4S	7
9	C5934	FTG 4-4XCLOSE MP-MP NIPPLE STRAIGHT BLK	1
10	C1065	BUSHING 0.50X0.25 BLK	1
REV. INITIAL RELEASE			

ITEMS NOT SHOWN		
PART	**DESCRIPTION**	**QTY**
132702	ELECTRICAL KIT AIR NXT 52	1
132688	AIR SCHEM CONTROL TOWER ASM NXT52	1

NOTE:
ITEMS 3-10 INCLUDED WITH 131707.

Air Schematic Control Tower Asm PN 132688

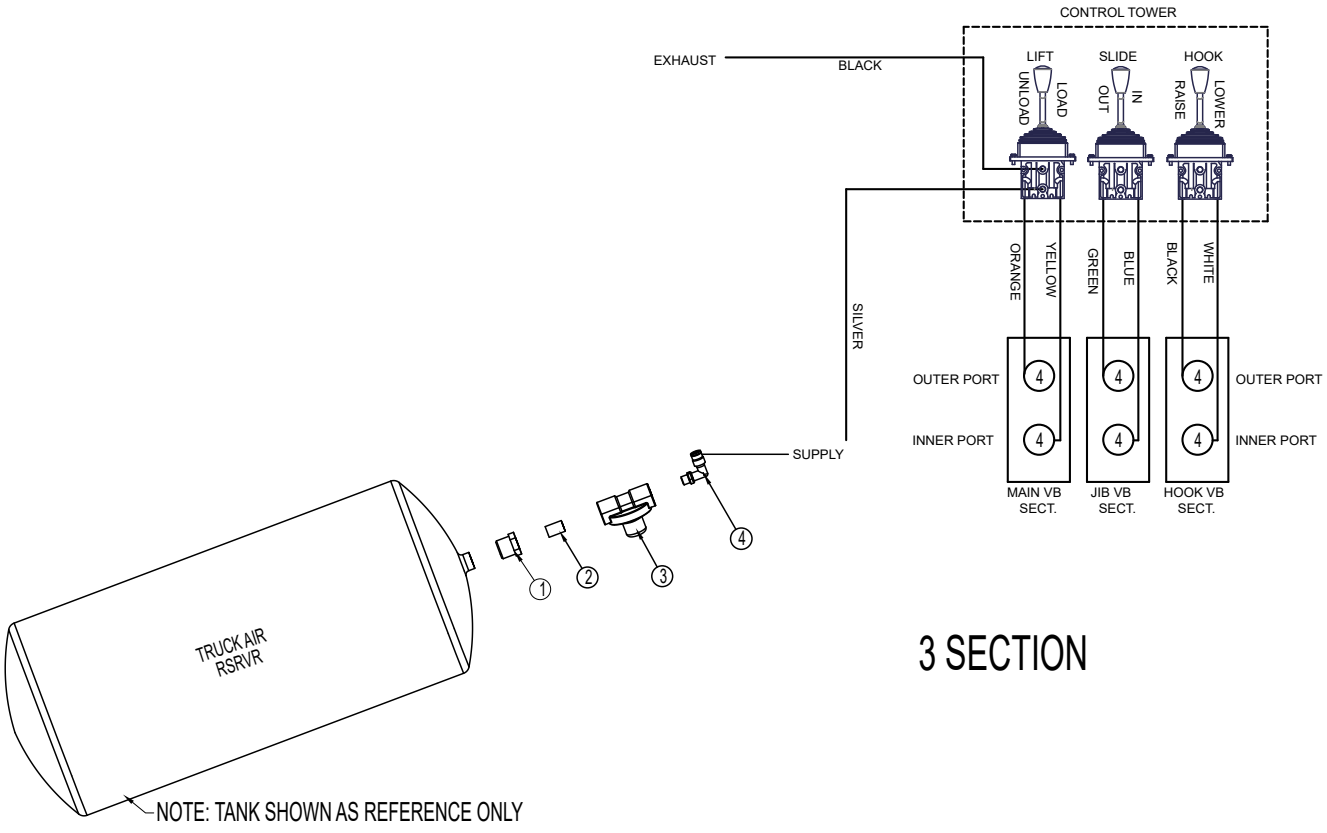

3 SECTION

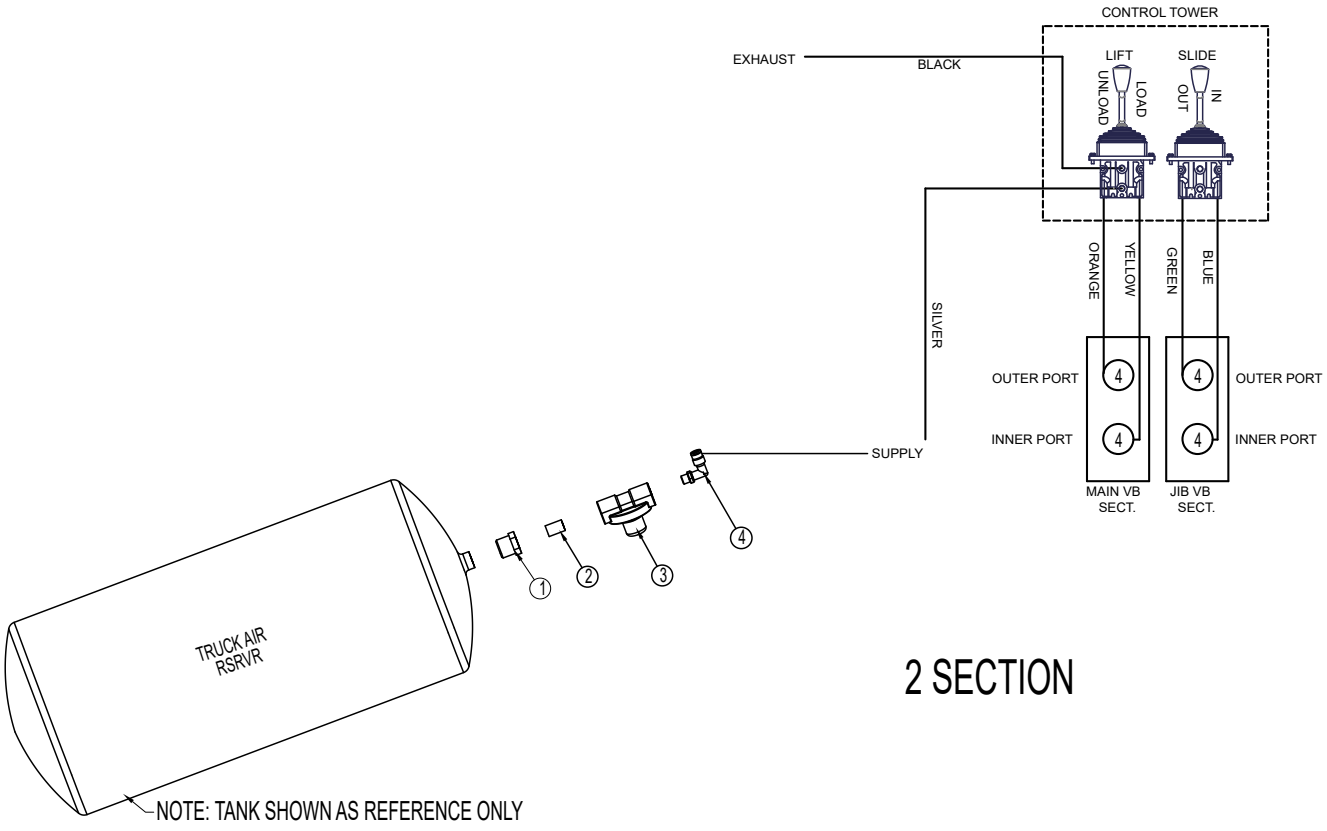

2 SECTION

Air Schematic Control Tower Asm PN 132688 Parts List

3-SECTION PN 132688			
ITEM	**PART**	**DESCRIPTION**	**QTY**
1	C1065	BUSHING 0.50X0.25 BLK	1
2	C5934	FTG 4-4XCLOSE MP-MP NIPPLE STRAIGHT BLK	1
3	35211	PTO AIR REGULATOR 378414	1
4	45687	FTG 4-2 MP-PTC 90 BRASS 1169X4S1	7

TUBING COLOR CODE	
COLOR	**APPLICATION**
SILVER	SUPPLY
BLACK	EXHAUST
GREEN	SLIDE OUT
BLUE	SLIDE IN
ORANGE	LIFT UNLOAD
YELLOW	LIFT LOAD
WHITE	HOOK LOWER
BLACK	HOOK RAISE

2-SECTION PN 132688			
ITEM	**PART**	**DESCRIPTION**	**QTY**
1	C1065	BUSHING 0.50X0.25 BLK	1
2	C5934	FTG 4-4XCLOSE MP-MP NIPPLE STRAIGHT BLK	1
3	35211	PTO AIR REGULATOR 378414	1
4	45687	FTG 4-2 MP-PTC 90 BRASS 1169X4S1	7

TUBING COLOR CODE	
COLOR	**APPLICATION**
SILVER	SUPPLY
BLACK	EXHAUST
GREEN	SLIDE OUT
BLUE	SLIDE IN
ORANGE	LIFT UNLOAD
YELLOW	LIFT LOAD

Step 9: Install Hoist Up Light Sensor - PN 127153

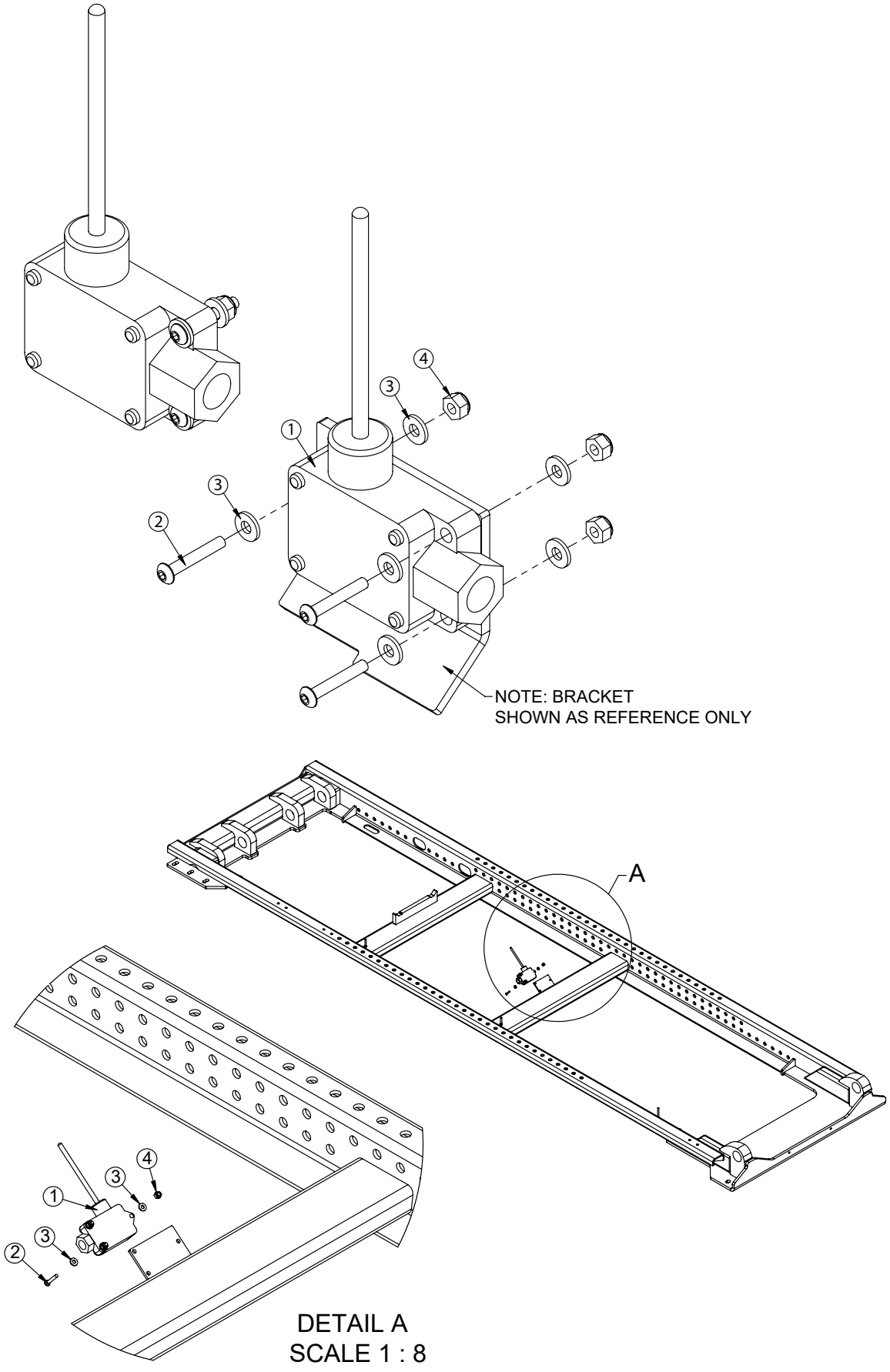

Hoist Up Light Sensor - PN 127153 Parts

PN 127153			
ITEM	**PART**	**DESCRIPTION**	**QTY**
1	127000	SWITCH ASM HOIST UP NXT	1
2	30472	CAP SCR #10-24X1.25 BTNHD SS	3
3	D0178	WASHER #10 SAE FLAT	6
4	26034	NUT #10-24 HH NYLOC	3

NOTES:
SEE CONTROLLER ASM FOR WIRING.
FOR REFERENCE:

- **GREEN TO IGNITION**
- **BLACK TO BODY DN**
- **WHITE TO BODY UP**

NXT52 Step 10: Apply Chassis Decals - PN 127720

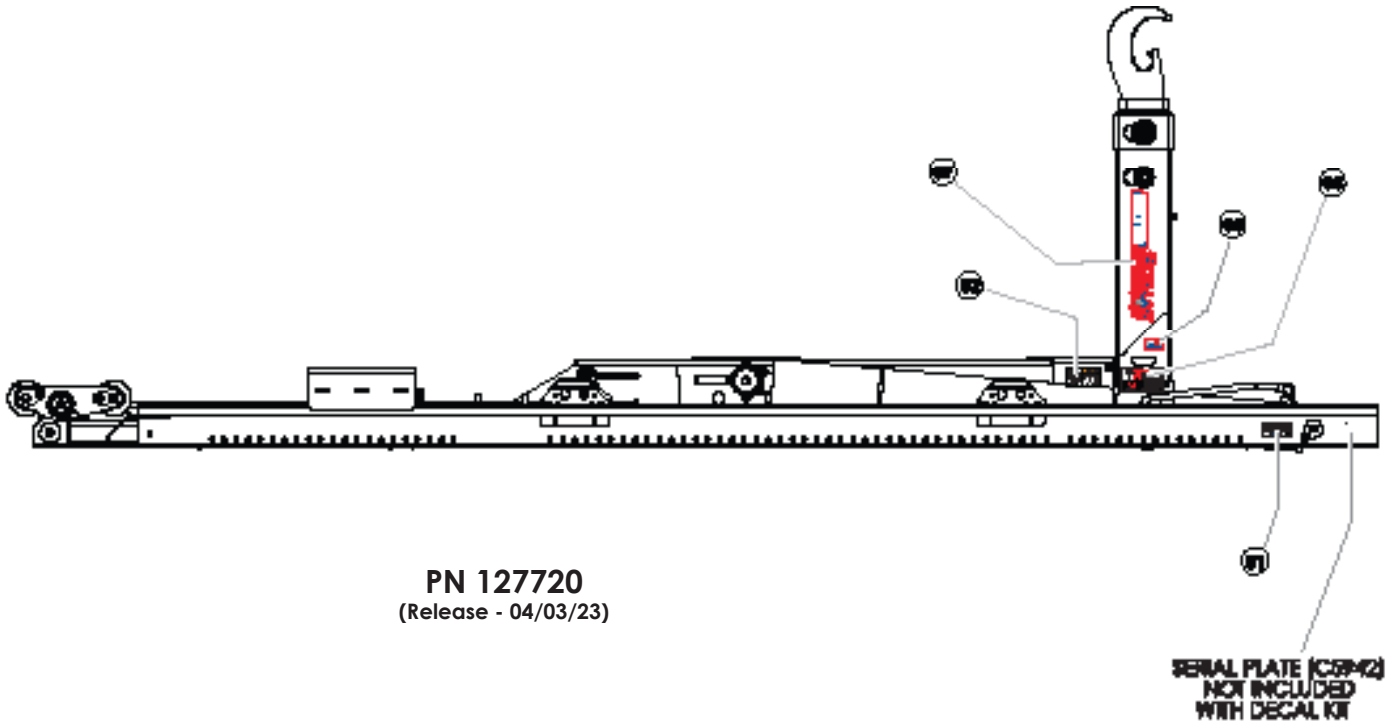

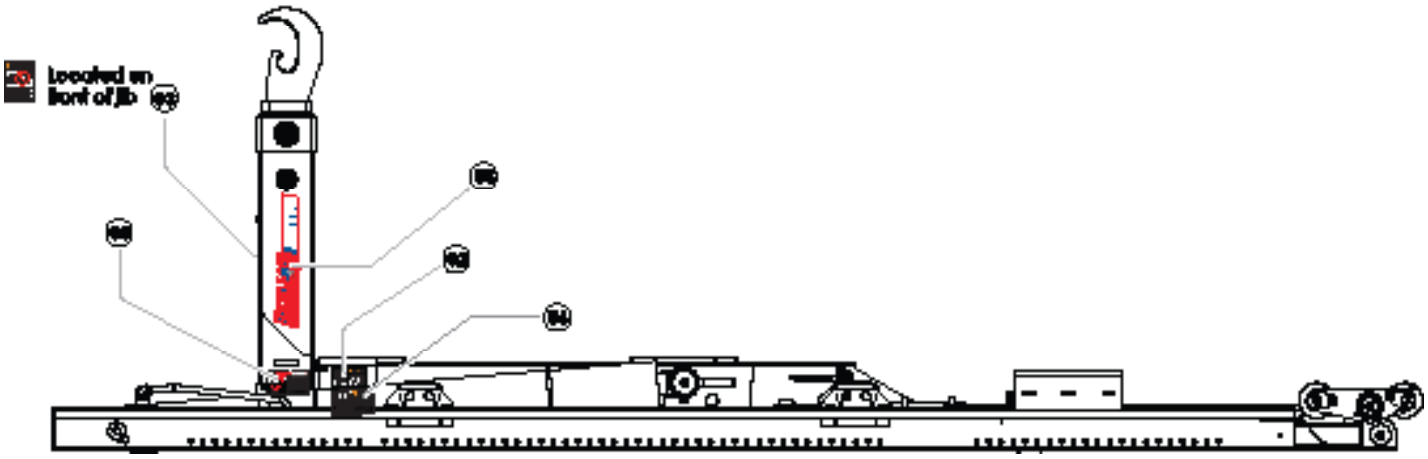

ITEM	PN	DESCRIPTION	QTY
01	4214	DECAL CONTACT STELLAR	1
02	25627	DECAL WARNING CRUSH	2
03	45955	DECAL WARNING HOOK HEIGHT MATCH	1
04	35234	DECAL STELLAR MADE IN THE USA	1
05	55832	DECAL DANGER ELECTROCUTION HOOK	2
06	68024	DECAL WARNING UNTRAINED OPERATOR	1
07	131093	DECAL NXT52 STRIPE CS	1
08	131092	DECAL NXT52 STRIPE SS	1

NXT40 Step 10A: Apply Chassis Decals - PN 121012

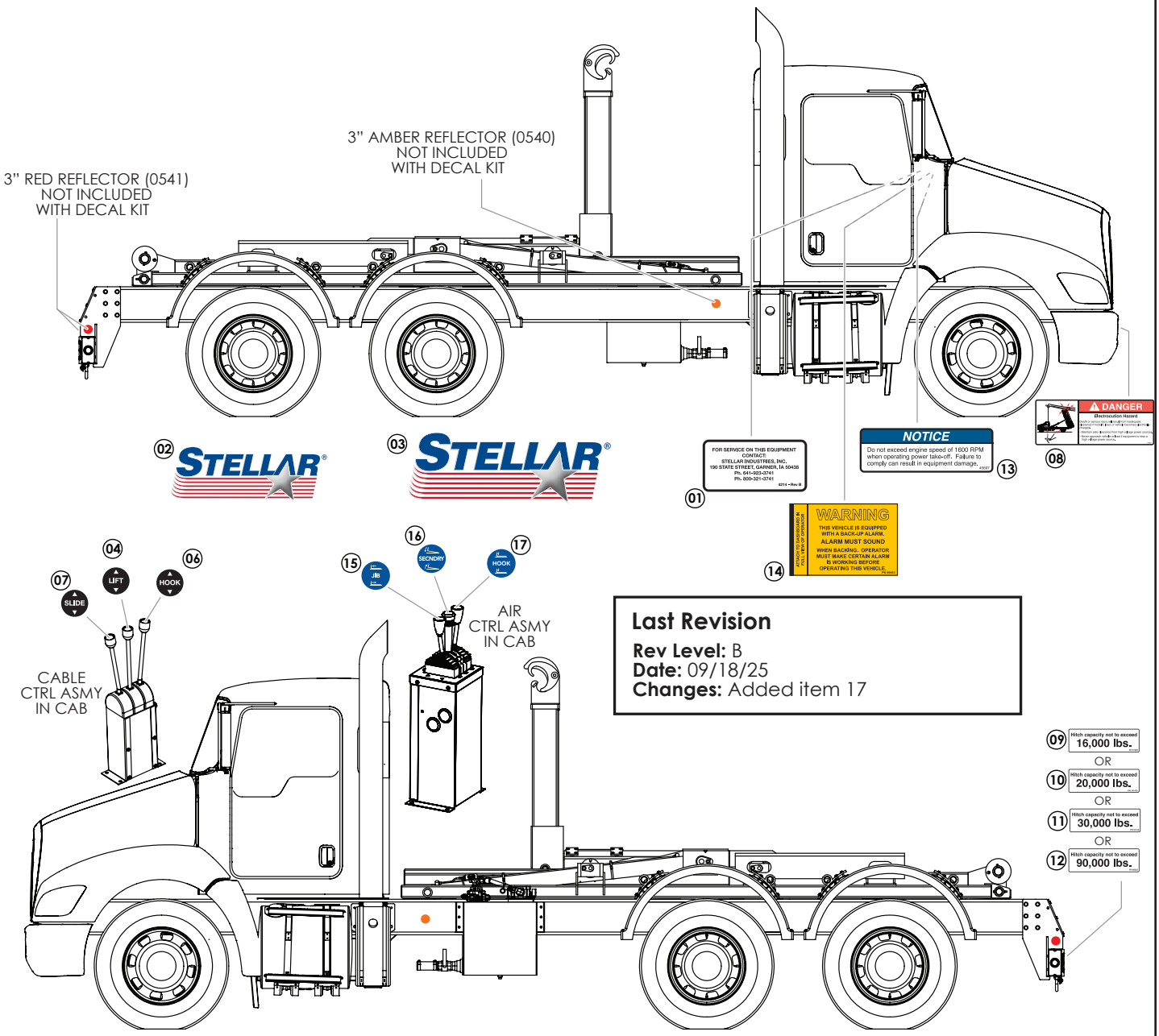

Last Revision

Rev Level: B
Date: 09/18/25
Changes: Added item 17

PN 121012

ITEM	PART No.	DESCRIPTION	SUGGESTED LOCATION	QTY.
01	4214	DECAL CONTACT STELLAR	IN CAB	1
02	53850	DECAL STELLAR LOGO 4.00X11.50	SHIPPED LOOSE - OPTIMAL PLACEMENT	1
03	52681	DECAL STELLAR LOGO 6.00X16.50	SHIPPED LOOSE - OPTIMAL PLACEMENT	1
04	39211	DECAL HOOKLIFT LEVER LIFT	CABLE CONTROL TOWER (IF INSTALLED, CONFIUGURATIONSVARIES)	2
05	39212	DECAL HOOKLIFT LEVER TILT	CABLE CONTROL TOWER (IF INSTALLED, CONFIUGURATIONSVARIES)	2
06	55414	DECAL HOOKLIFT LEVER HOOK	CABLE CONTROL TOWER (IF INSTALLED, CONFIUGURATIONSVARIES)	2
07	55754	DECAL HOOKLIFT LEVER SLIDE	CABLE CONTROL TOWER (IF INSTALLED, CONFIUGURATIONSVARIES)	2
08	79983	DECAL DANGER ELECTROCUTION	FRONT BUMPER - STREET SIDE OR REAR BUMPER - CURB SIDE	1
09	91220	DECAL HITCH CAPACITY 16K	SELECT APPROPRIATE CAPACITY; REAR BUMPER - ABOVE PINTLE LOCATION; DISCARD OTHERS	1
10	141745	DECAL HITCH CAPACITY 20K		1
11	91219	DECAL HITCH CAPACITY 30K		1
12	68222	DECAL HITCH CAPACITY 90K		1
13	45697	ENGINE SPEED PTO CAUTION	IN CAB	1
14	69463	DECAL BACK-UP ALARM VERIFY	IN CAB	1
15	135336	DECAL HOOKLIFT CONTROLLER JIB NXT	AIR CONTROL TOWER (IF INSTALLED, CONFIUGURATIONSVARIES)	1
16	135337	DECAL HOOKLIFT CONTROLLER SECONDARY NXT	AIR CONTROL TOWER (IF INSTALLED, CONFIUGURATIONSVARIES)	1
17	135335	DECAL HOOKLIFT CONTROLLER HOOK NXT	AIR CONTROL TOWER (IF INSTALLED, CONFIUGURATIONSVARIES)	1

Step 11: Fill Reservoir And Activate Hydraulic Flow

- Fill reservoir to site gauge, within 3” from the top (Roughly 25 Gallons). Note: ISO 32 hydraulic oil is recommended.
- When connections are secure, activate hydraulic flow by opening the ball valve on the bottom of the reservoir. This will allow oil to flow from the reservoir to the pump.

Step 12: Operate Hooklift

⚠WARNING Stellar® hooklift operators must conform to the qualifications specified in the NXT52 Safety, operation, maintenance, troubleshooting manual. Read and understand all manuals and safety signs before operating or servicing this equipment.

- Bleed the air out of the hydraulic system.
- Check the hydraulic oil level and add oil if needed. When checking hydraulic oil level, make certain that all system cylinders are fully retracted.
- Calibrate dump light system.
- Be sure to check all clearances.
- Set / check relief pressure no higher than 4500 PSI.

This page left intentionally blank.



Subject to Change without Notification.
© 2023 Stellar Industries, Inc.