Slider20-S Hooklift

Owner's Manual

Installation • Assembly Drawings • Parts

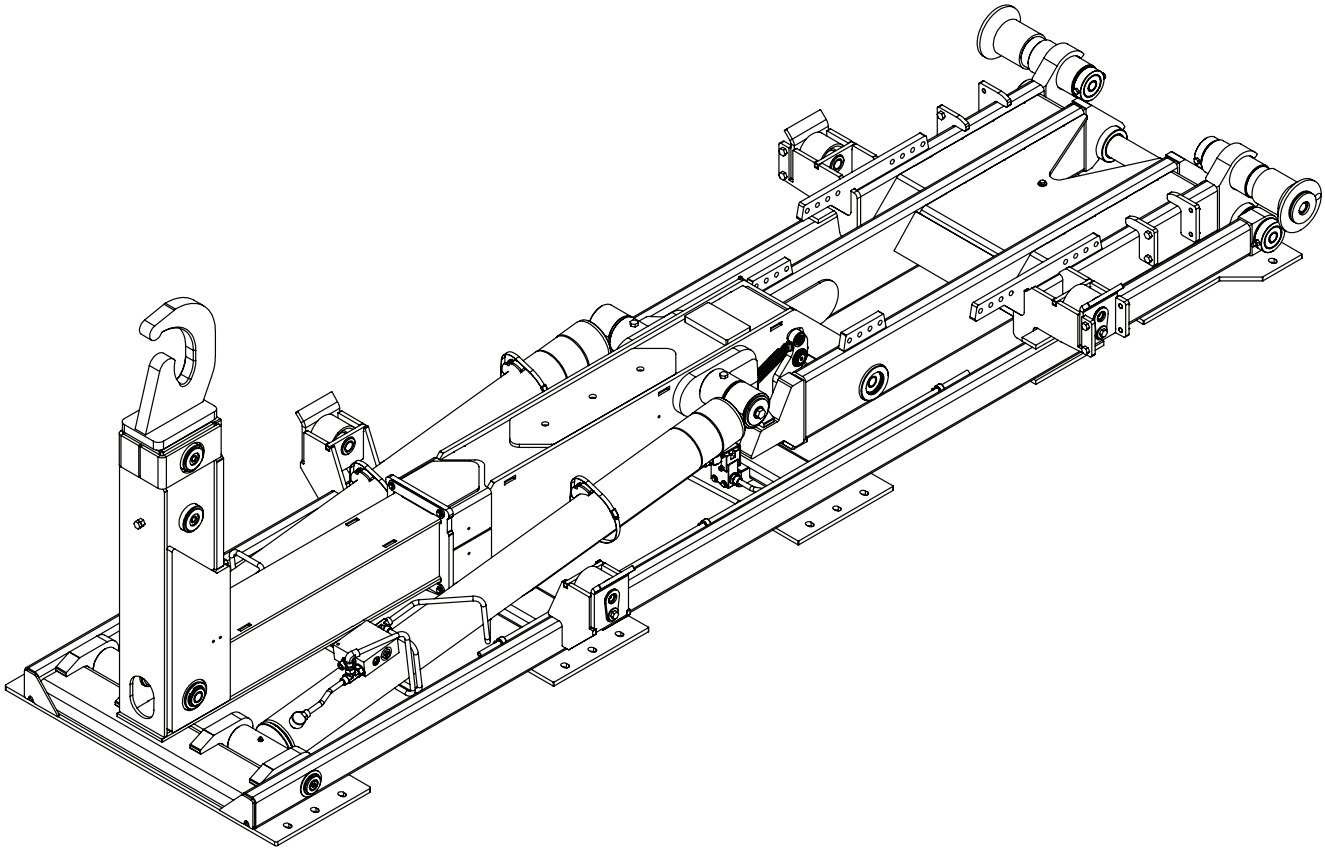

Stellar Industries, Inc.
190 State Street
PO Box 169
Garner, IA 50438
800-321-3741
Fax: 641-923-2811
www.stellarindustries.com

Subject to Change without Notification.
© 2022 Stellar Industries, Inc.

Rev 4.7
PN 89391

P65 Warning & Cold Weather Notice

⚠ WARNING

Operating, maintaining, and servicing a Stellar product may expose you to chemicals including, but not limited to, engine exhaust, carbon monoxide, phthalates, and lead. These chemicals are known to the State of California to cause cancer and birth defects (or other reproductive harm). To keep your exposure to a minimum, be sure to avoid breathing exhaust and service your Stellar product in a well-ventilated area while wearing gloves or washing your hands frequently. For more information, go to www.P65Warnings.ca.gov/passenger-vehicle.

NOTICE

Cold Weather Performance

Although clear data on cold weather performance from every steel manufacturer is not available for all types and thicknesses of steel, Stellar Industries is confident that the weldments on our products will operate to 100% of their intended purpose to temperatures down to -40° F / C.

It is recommended it Stellar manufactured equipment needs to be used in temperatures below -40° F / C, the operator should pull the unit into a climate-controlled area and allow the weldments to warm up to and then maintain a temperature above this level.

Table of Contents

Chapter 1 - Specifications 1
Slider20-S Specifications 1
Slider20-S Latch Locations for Skid Compatibility 2
Slider20-S Latch Locations for Skid Compatibility (cont.) 3
Slider20-S Latch Locations for Skid Compatibility (cont.) 4
Slider20-S Grease Zerk Locations 4
Chapter 2 - Installation 5
General Installation 5
Installer Notice 5
Torque Data Chart 6
Installation Note 7
Step 1: Set the hooklift onto the truck frame. 7
Step 2: Drill mounting holes. 7
Step 3: Install bumper. 8
Step 4: Install tie-downs. 8
Step 5: Install tarper tower (If applicable). 8
Step 6: Install hydraulic reservoir and valve bank. 8
Reservoir Assembly (2 Section Cable Controls) - PN 94582 9
Reservoir Assembly (3 Section Cable Controls) - PN 94606 10
Reservoir Assembly (2 Sectoin Air Controls) - PN 94583 11
Reservoir Assembly (3 Sectoin Air Controls) - PN 94607 12
Reservoir Subassembly - PN 86006 13
Valve Bank Parts Drawing 14
Face Seal/O-Ring Size Chart 14
Step 7: Install PTO and pump. 15
Step 8: Route hydraulic hoses. 16
Hose Kit - PN 117666 (Manual Adjustable Hook Height Models) 16
Hose Kit - PN 113679 (Hydraulic Adjustable Hook Height Models) 17
Power Beyond VDM8 Valve 18
Step 9: Route Electrical Components 19
Step 10: Install cab and PTO controls. 20
Cable Controls 20
Air Controls 2-Section - PN 75868 21
Air Controls 3-Section - PN 88647 22
Air Controls 3-Section - PN 88647 Parts List 23
Air Controls - Isuzu - PN 125016 24
Step 11: Install Hoist Up Light Sensor - PN 83115 25
Step 12: Install mud flaps and fenders. 25
Step 13A: Apply Hooklift Assembly Decals 26
Step 13B: Apply Chassis Decals 27
Step 14: Fill reservoir and activate hydraulic flow. 28
Step 15: Operate hooklift. 28
Set System Relief Pressure 28
Chapter 3 - Assembly Drawings 29
Base Assembly - PN 117693 29
Plunger Valve Assembly - PN 86130 30
Dump Assembly - PN 117696 30
Outside Latch Assembly - PN 55358 (Optional) 31
Inside Latch Assembly - PN 117619 (Optional) 31
Secondary & Dump Latch Assembly - PN 117834 32
Secondary & Dump Latch Asm - PN 117834 Parts List 33
Main Cylinder Assembly - PN 117872 34
Jib Asm. (36/54 in. Manual Hook Height) - PN 117865 35
Jib Asm. (36/54 in. Hyd. Hook Height) - PN 119117 36
Jib Asm. (36/54 in. Hyd. Hook Height) - PN 119117 (cont.) 37
Hose Track - PN 119417 38
Extension Cylinder Assembly - PN 117927 39
Tilt Cylinder Assembly - PN 54529 39
Toolbox Assembly - PN 8480 40
Toolbox Assembly - PN 10401 40
Toolbox Assembly - PN 10402 40
Optional Fender Kit - PN 116164 41
Optional Threshold Plate Kit - PN 119066 42

Introduction

A copy of this manual is provided with every hooklift and can be found in the hard plastic manual case that is installed on the chassis. A copy of this manual shall remain with the hooklift at all times.

Throughout the manual, three signal words will be used to bring attention to important items:

NOTICE A NOTICE signal word indicates a practice not related to physical injury.

⚠WARNING A WARNING signal word indicates a hazardous situation which, if not avoided, could result in death or serious injury.

⚠ DANGER A DANGER signal word indicates a hazardous situation which, if not avoided, will result in death or serious injury.

Information contained within this manual does not cover operation, maintenance, or troubleshooting. Please refer to the General Slider Hooklift Manual for details on these items.

This manual is not binding. Stellar Industries, Inc. reserves the right to change, at any time, any or all of the items, components, and parts deemed necessary for product improvement or commercial/production purposes. This right is kept with no requirement or obligation for immediate mandatory updating of this manual.

In closing:
If more information is required or technical assistance is needed, or if you feel that any part of this manual is unclear or incorrect, please contact the Stellar Customer Service Department by phone at 800-321-3741 or email at service@stellarindustries.com.

For Technical Questions, Information, Parts, or Warranty, Call Toll-Free at

800-321-3741

Hours: Monday - Friday, 8:00 a.m. - 5:00 p.m. CST

Or email at the following addresses:

Technical Questions, and Information	service@stellarindustries.com
Order Parts	parts@stellarindustries.com
Warranty Information	warranty@stellarindustries.com

Serial Tag Location

The serial tag should be located on the right side (passenger side) of the base assembly:

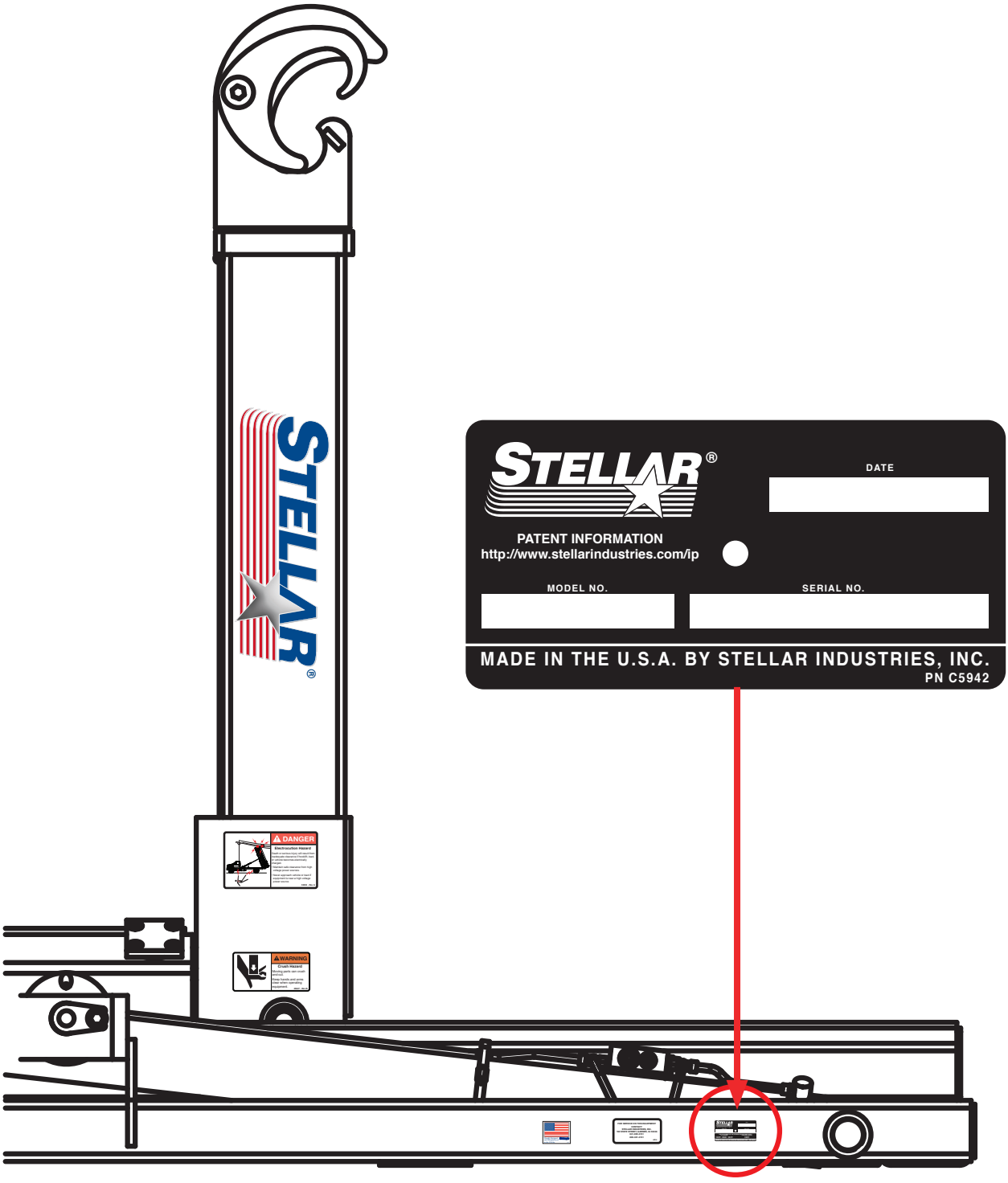

This page intentionally left blank.

Chapter 1 - Specifications

Slider20-S Specifications

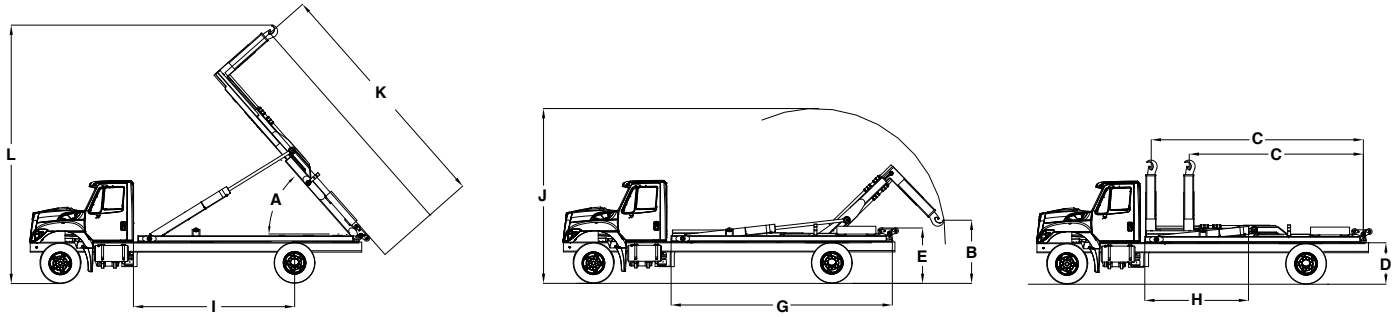

		36” (91 cm) to 54” (137 cm) Adj. Hook Height (Manual)	36” (91 cm) to 54” (137 cm) Adj. Hook Height (Hydraulic)
	Lifting Capacity	20,000 lbs (9,072 kg)	20,000 lbs (9,072 kg)
	Dumping Capacity	20,000 lbs (9,072 kg)	20,000 lbs (9,072 kg)
A	Dump Angle	60º	60º
B	Lowest Hook Height	27.63” or 9.25” (70 cm or 23.5 cm)	27.63” or 9.25” (70 cm or 23.5 cm)
C	Effective Length	112.50” to 142.50” (286 cm to 362 cm)	112.50” to 142.50” (286 cm to 362 cm)
D	Truck Frame Height	40” (102 cm)	40” (102 cm)
E	Hooklift Height	50.5” (128 cm)	50.5” (128 cm)
G	Hooklift Length	150.69” (383 cm)	150.69” (383 cm)
H	Hooklift Center of Gravity	67” (170 cm)	67” (170 cm)
I	Chassis Cab to Axle	108” to 120”*** (274 cm to 305 cm)***	108” to 120”*** (274 cm to 305 cm)***
J	Max. Height When Loading	130.6” to 142.6” (332 mm to 362 cm)	130.6” to 142.6” (332 mm to 362 cm)
K	Longest Body When Dumping	15’ (4.6 m)	15’ (4.6 m)
L	Max. Height When Dumping	157.75” to 206.50” (401 cm to 525 cm)	157.75” to 206.50” (401 cm to 525 cm)
	Maximum Operating Pressure	4,500 psi (31 MPa)	4,500 psi (31 MPa)
	Hydraulic Flow	24 gpm (91 lpm)	24 gpm (91 lpm)
	Shipping Weight	2810 lbs (1,274 kg)	2,910 lbs (1,320 kg)
	Shipping Dimensions (LxWxH)	152.13” x 46” x (58-76”)	152.13” x 46” x (58-76”)
	Minimum Truck GVWR	22,000 lbs (9,979 kg)	22,000 lbs (9,979 kg)
	Load Angle w/Shortest Body Length	55º	55º
	Recommended Container Lengths*	10’ to 14’ (3.0 m to 4.25 m)	10’ to 14’ (3.0 m to 4.25 m)
	Recommended Flatbed Lengths**	Up to 16’ (4.87 m)	Up to 16’ (4.87 m)

*Assumes 3 ft. overhang from center of rear roller pin (Bumper typically 12” from center of roller pin)

**Assumes 5 ft. overhang from center of rear roller pin (May require bumper and latch options)

***Weight Distribution Required

Slider20-S Latch Locations for Skid Compatibility

Minimum recommended rail construction.	
84–12–8	5x2x1/4
84–11–14	5x2x1/4
84–12–16	5x2x1/4
108–12–20/36	5x2x1/4
84–12–9SP	5x2x1/4
84–12–13SP	5x2x1/4
84–10 (Flex36)	5x2x1/4
84–12–12	5x2x1/4
Slider20S	5x2x1/4
Slider26	5x2x1/4

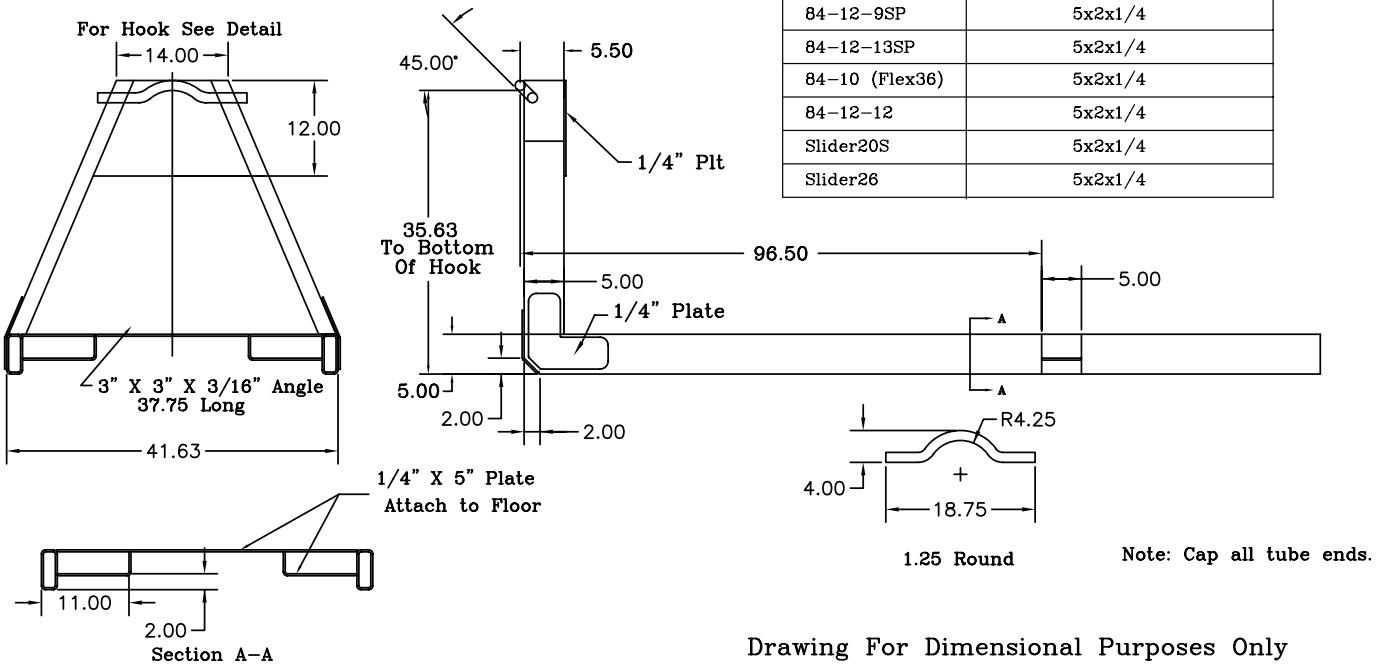

Note: Cap all tube ends.

Drawing For Dimensional Purposes Only

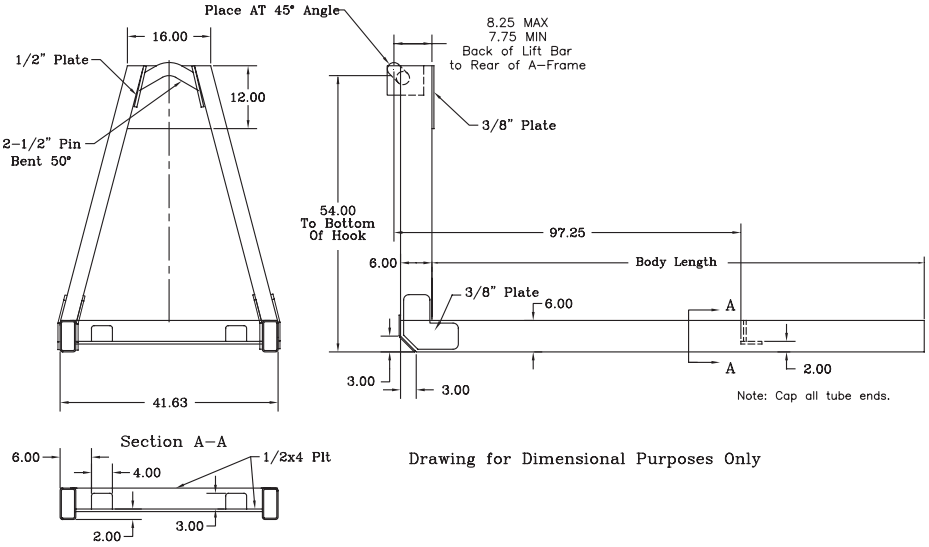

Drawing for Dimensional Purposes Only

Minimum recommended rail construction.	
108–11–20	6x2x1/4
96–10–24	6x2x1/4
Slider20S	6x2x1/4
Slider26	6x2x1/4

Slider20-S Latch Locations for Skid Compatibility (cont.)

Minimum recommended rail construction.	
108–16–8	5x2x1/4
108–13–14	5x2x1/4
120–16–8	5x2x1/4
120–16–12	5x2x1/4
120–14–14	5x2x1/4
120–15–16	5x2x1/4
120–16–16	5x2x1/4
108–12 (Flex36)	5x2x1/4
120–14 (Flex36)	5x2x1/4
Slider20S	5x2x1/4
Slider26	5x2x1/4

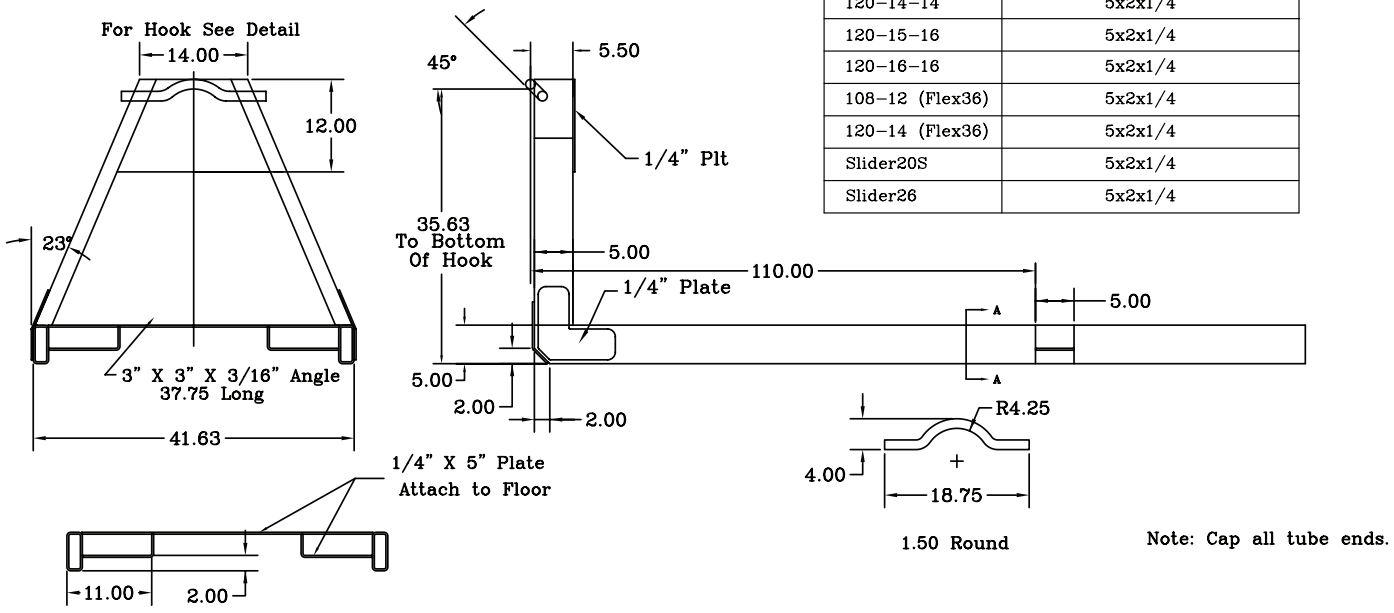

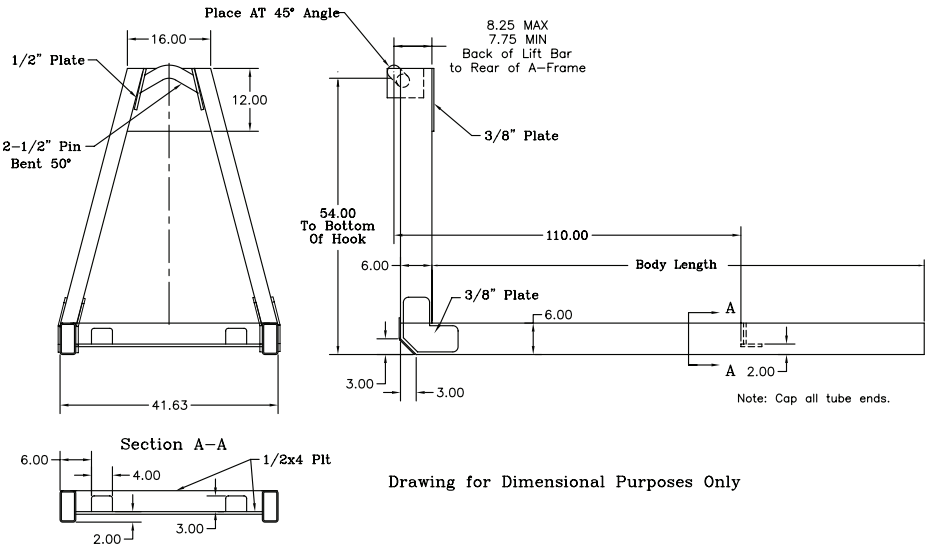

Minimum recommended rail construction.	
120–16–20	6x2x1/4
Slider20S	6x2x1/4
Slider26	6x2x1/4
Slider34	6x2x1/4

Slider20-S Latch Locations for Skid Compatibility (cont.)

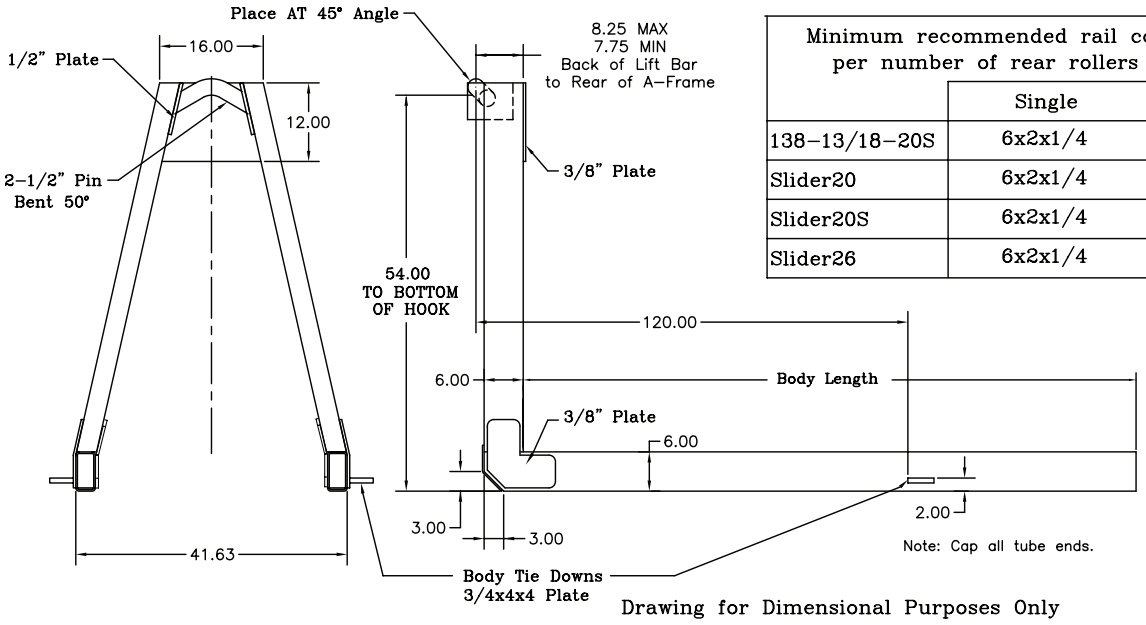

Drawing for Dimensional Purposes Only

Minimum recommended rail construction per number of rear rollers on loader.

	Single	Double
138-13/18-20S	6x2x1/4	6x2x1/4
Slider20	6x2x1/4	6x2x1/4
Slider20S	6x2x1/4	6x2x1/4
Slider26	6x2x1/4	6x2x1/4

Slider20-S Grease Zerk Locations

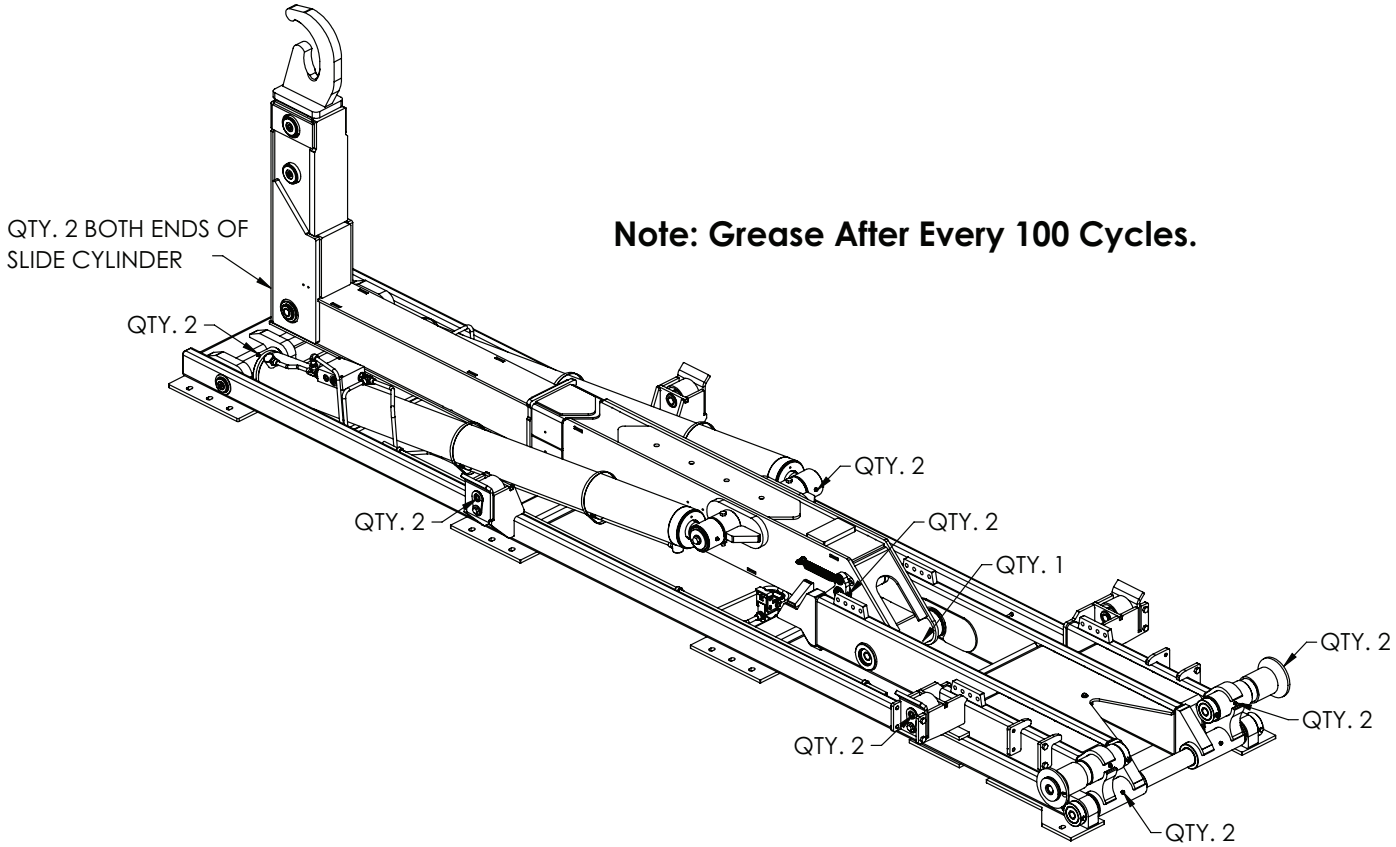

Note: Grease After Every 100 Cycles.

Chapter 2 - Installation

General Installation

This chapter is designed to serve as a general guide for the installation of a Stellar® Slider20S Hooklift. Each installation is considered unique so certain portions of this chapter may or may not apply to your direct application. If a question should arise during the installation process, please contact Stellar Customer Service at (800) 321 3741.

PTO and Pump installation instructions are provided by the corresponding manufacturers. For more information on which PTO and Pump fit your application, please contact your local Stellar Distributor or Stellar Customer Service.

⚠WARNING Do not install this hooklift on a chassis not capable of handling the loads imposed on it. Failure to do so may result in serious injury or death.

NOTICE Do not weld or drill holes into the side wall of the base tubes.

Hooklift Mounting and Assembly
Study names and locations of the parts and familiarize yourself with the hooklift before starting the assembly . Reading the step-by-step instructions that follow will be helpful.

Assembly
Select an area for assembly that will be large enough to accommodate the completed unit. The surface of the work area should be as level as possible. Use the proper hand tools to ensure proper bolt tightness. Refer to the torque data chart in this chapter for the recommended torque values for different sizes of bolts.

Model Number
Know the model number of the Stellar® Hooklift being mounted. Use this model number whenever referring to the assembly or parts listing pages. The number is stamped on the name plate which is located on the front frame member.

Installer Notice

According to Federal Law (49 cfr part 571), each final-stage manufacturer shall complete the vehicle in such a manner that it conforms to the standards in effect on the date of manufacture of the incomplete vehicle, the date of final completion, or a date between those two dates. This requirement shall, however, be superseded by any conflicting provisions of a standard that applies by its terms to vehicles manufactured in two or more stages.

Therefore, the installer of Stellar® Hooklifts is considered one of the manufacturers of the vehicle. As such a manufacturer, the installer is responsible for compliance with all applicable federal and state regulations. They are required to certify that the vehicle is in compliance with the Federal Motor Vehicle Safety Standards and other regulations issued under the National Traffic and Motor Vehicle Safety Act.

Please reference the Code of Federal Regulations, title 49 - Transportation, Volume 5 (400-999), for further information, or visit http://www.gpoaccess.gov/nara/index.html for the full text of Code of Federal Regulations.

Torque Data Chart

When using the torque data in the chart, the following rules should be observed:

		GRADE 5		GRADE 8		GRADE 9
		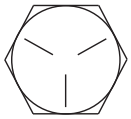		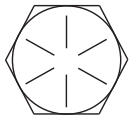		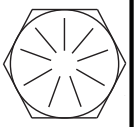
Size (DIA-TPI)	**Bolt DIA (Inches)**	**Plain (Ft-Lb)**	**Plated (Ft-Lb)**	**Plain (Ft-Lb)**	**Plated (Ft-Lb)**	**Plated (Ft-Lb)**
5/16-18	0.3125	17	13	25	18	22
3/8-16	0.3750	31	23	44	33	39
7/16-14	0.4375	49	37	70	52	63
1/2-13	0.5000	75	57	105	80	96
9/16-12	0.5625	110	82	155	115	139
5/8-11	0.6250	150	115	220	160	192
3/4-10	0.7500	265	200	375	280	340
7/8-9	0.8750	395	295	605	455	549
1-8	1.000	590	445	910	680	823
1 1/8-7	1.1250	795	595	1290	965	1167
1 1/4-7	1.2500	1120	840	1815	1360	1646
1 3/8-6	1.3750	1470	1100	2380	1780	2158
1 1/2-6	1.500	1950	1460	3160	2370	2865

- Bolt manufacturer's particular specifications should be consulted when provided.
- Flat washers of equal strength must be used.
- All torque measurements are given in foot-pounds. To convert to inch-pounds, multiply by 12.
- Torque values specified are for bolts with residual oils or no special lubricants applied. If special lubricants of high stress ability, such as Never-Seez compound graphite and oil, molybdenum disulphite, colloidal copper or white lead are applied, multiply the torque values in the charts by the factor .90. The use of Loctite does not affect the torque values listed above.
- Torque values for socket-head capscrews are the same as for Grade 8 capscrews.
- Do not use these values if a different torque value or tightening procedure is given for a specific application. Torque values listed are for general use only. Check tightness of fasteners periodically.
- Sheer bolts are designed to fail under predetermined loads. Always replace shear bolts with identical grade.
- Fasteners should be replaced with the same or higher grade. If higher grade fasteners are used, these should only be tightened to the strength of the original.
- Tighten plastic insert or crimped steel-type lock nuts to approximately 110 percent of the dry torque values shown in the chart below, applied to the nut, not to the bolt head. Tighten toothed or serrated-type lock nuts to the full torque value. *Note: "Lubricated" means coated with a lubricant such as engine oil, or fasteners with phosphate and oil coatings. "Dry" means plain or zinc plated without lubrication. Tighten lubricated bolts to approximately 80% of dry bolts.*

Installation Note

Every hooklift installation is unique. However, certain guidelines exist that apply to every model. Listed below is a general set of chronological steps that may be followed when installing a Stellar Hooklift. If any questions arise during the installation process, feel free to contact your local dealer or Stellar Customer Service at 800-321-3741.

Step 1: Set the hooklift onto the truck frame.

- Visually inspect the truck and look for any potential issues. For example: Clearance problems, cross members extending too high, insufficient room in front of the Slider for tarpers, exhaust manifolds, etc., or insufficient room in the rear to allow for bumper selection. *Note: Stellar Industries recommends allowing 12" behind the start of clear truck frame for installation of a tarping system.*

- Be sure to square the Slider on the truck frame to allow for proper measurement. The front of the hooklift needs to be at least 2.50" behind the cab or any equipment mounted behind the cab. *Note: On some Slider models, the jib may extend beyond the front of the base.*

Step 2: Drill mounting holes.

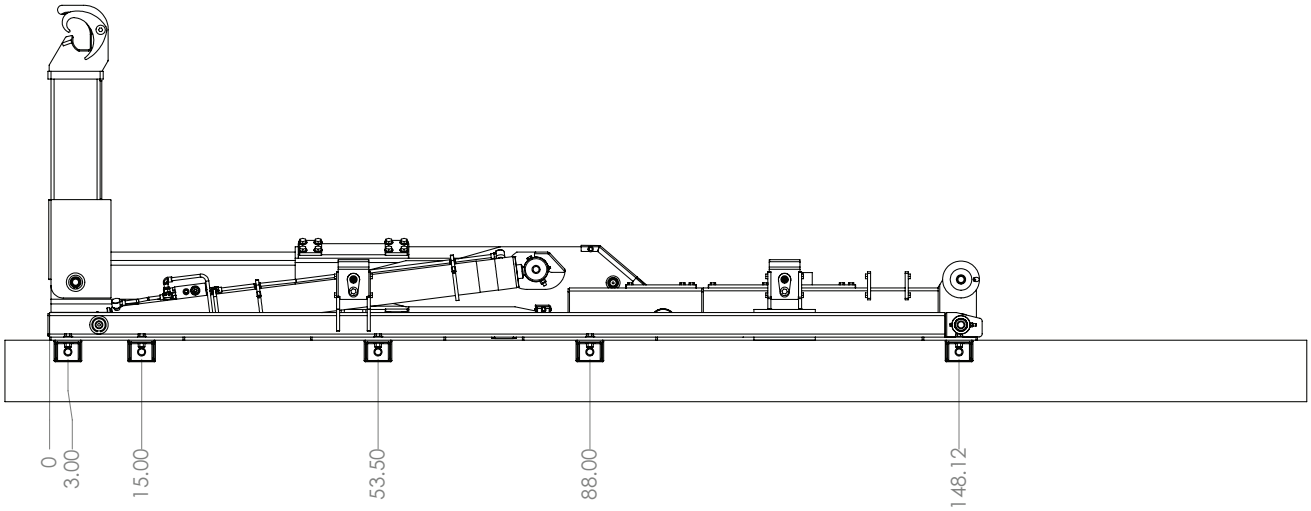

Note: These are approximent measurements from the front of the hooklift base. Specific applications may vary.

- When positioning mounts to frame, tie-down castings are bolted to the underside of each tie down plate located on the outside of the main rails of the base. The tie-down plate closest to the front of the base requires one mount on each side of the pin. This is the only time two tie down castings are required per a single tie-down plate. The tie-down plates are designed with multiple slots to offer more flexibility in mounting locations. Additional holes may not be added to the tie-down plates.

- Using the tie-down castings as a guide, drill 11/16" holes through the truck frame as shown.

Step 3: Install bumper.

- See NHTSA (National Highway Truck Safety Administration) Regulations for acceptable placement.
- Modify the truck frame as necessary so that it ends 2” from the rear of the hooklift.

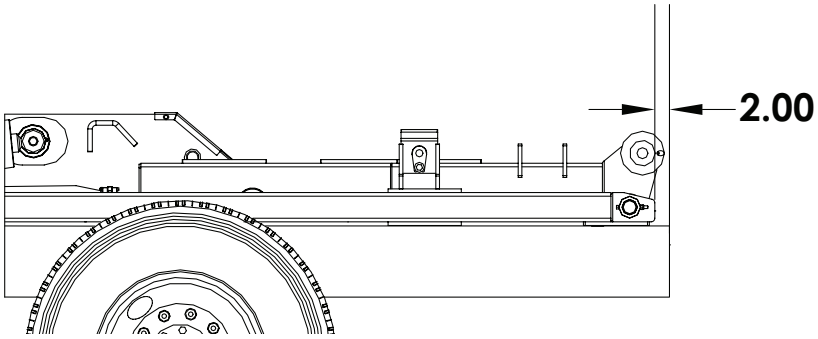

Step 4: Install tie-downs.

Note: See torque chart at beginning of chapter:

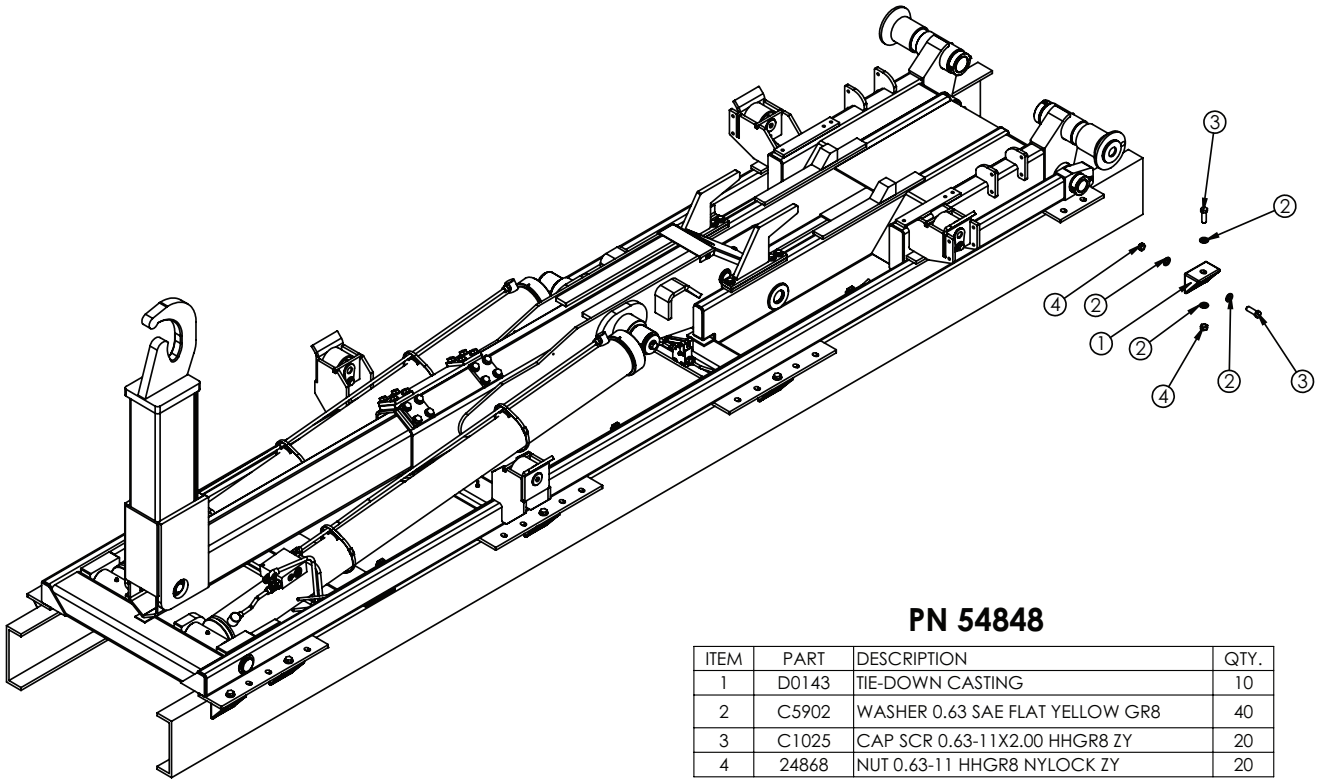

PN 54848

ITEM	PART	DESCRIPTION	QTY.
1	D0143	TIE-DOWN CASTING	10
2	C5902	WASHER 0.63 SAE FLAT YELLOW GR8	40
3	C1025	CAP SCR 0.63-11X2.00 HHGR8 ZY	20
4	24868	NUT 0.63-11 HHGR8 NYLOCK ZY	20

Step 5: Install tarper tower (If applicable).

See brand specific installation instructions.

Step 6: Install hydraulic reservoir and valve bank.

- Before drilling and bolting to the frame, confirm adequate room for cable routing between in-cab controls and the valve bank. **Note: The top of the reservoir should not be above the truck frame.**

Reservoir Assembly (2 Section Cable Controls) - PN 94582

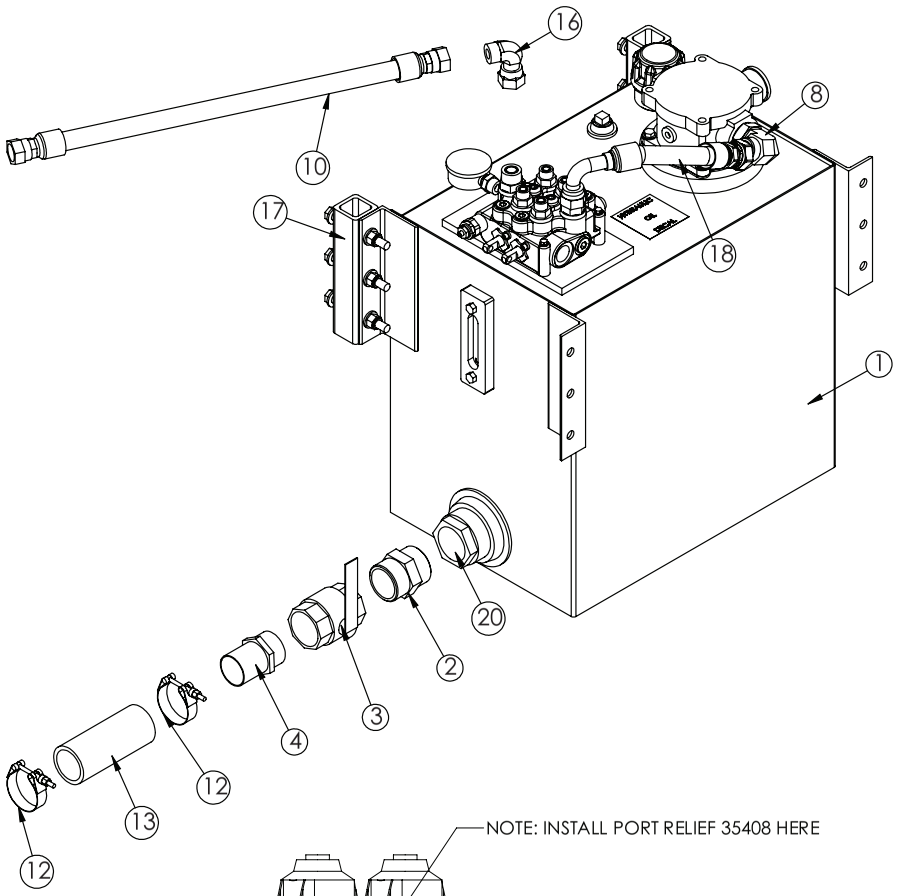

PN 94582

ITEM	PART	DESCRIPTION	QTY
1	86006	RSRVR ASM 25GAL K MODEL W/ TANK TOP FILTER	1
2	7353	FTG 32-32 MP-MP HEX NIPPLE STRAIGHT	1
3	C4750	VALVE BALL 2.00	1
4	C4730	FTG 32-32 MP-HB STRAIGHT	1
5	91222	VB 2-SECT VDM8 C4-C4-4200MRV-(2-A-3000-B-2500)-LCHA-ZNCT	1
6	0521	WASHER 0.25 LOCK	3
7	0339	CAP SCR 0.25-20X2.50 HHGR5	3
8	60395	FTG 16-20 MFS-MAORB 90	1
9	C2252	FTG 8-10 MFS-MORB STRAIGHT	4
10	27119	HOSE 0.75(78C-12-JC-JC-12-12-12-120)	1
11	10094	GAUGE OIL LF 2.5" 0-5000 BM	1
12	C4819	HOSE CLAMP 2.00	2
13	17766	HOSE SUCT 2.00 10FT	1
14	25630	FTG 10-4 MORB-FP STRAIGHT	1
15	d1435	FTG 12-10 MFS-MORB STRAIGHT	1
16	c4903	FTG 12-12 MFS-FFSS 90	1
17	83959	MNT KIT RSRVR 25G	1
18	86168	HOSE 0.75(300PSI)-16FFSS SHORT-12FFSS 90 SHORT-8.50CL	1
19	C2142	FTG 12-12 MFS-MORB STRAIGHT	1
20	C6327	FILTER STRAINER 35GAL TF-2030	1

NOTE: ITEMS NOT SHOWN
25941 - DECAL LOADER VB VDM8 HOSE LOCATION X 1
42971 - DECAL OIL FILTER CHANGE X 1
35408 - PORT RELIEF VDM8 2715 PSI

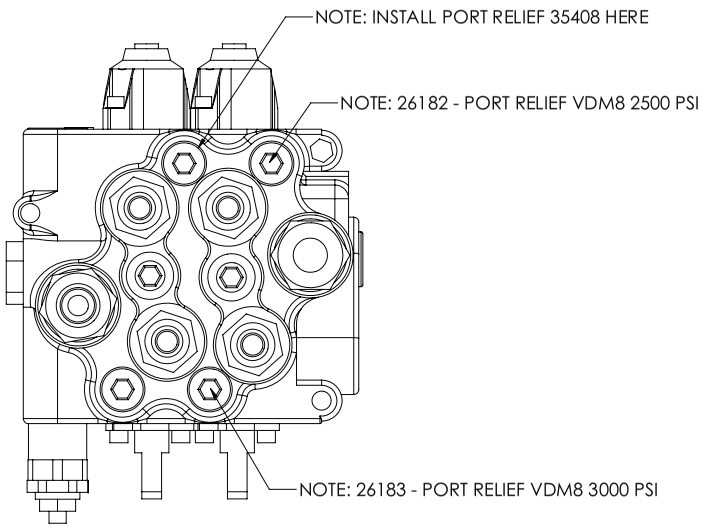

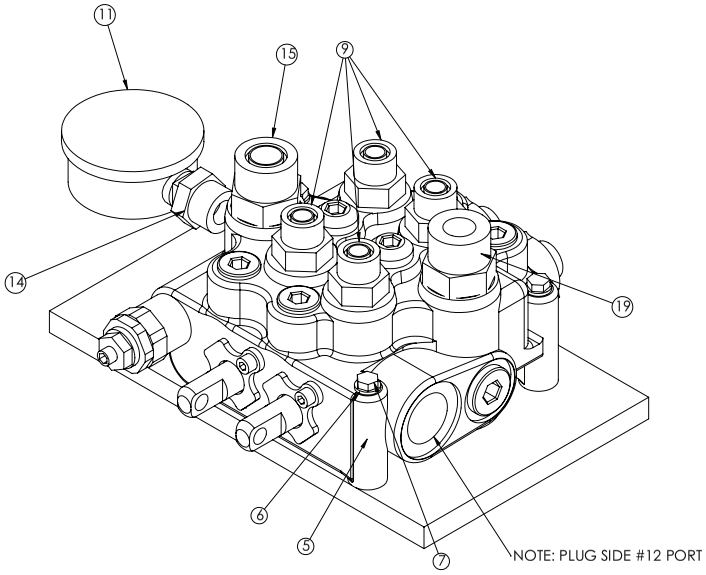

Reservoir Assembly (3 Section Cable Controls) - PN 94606

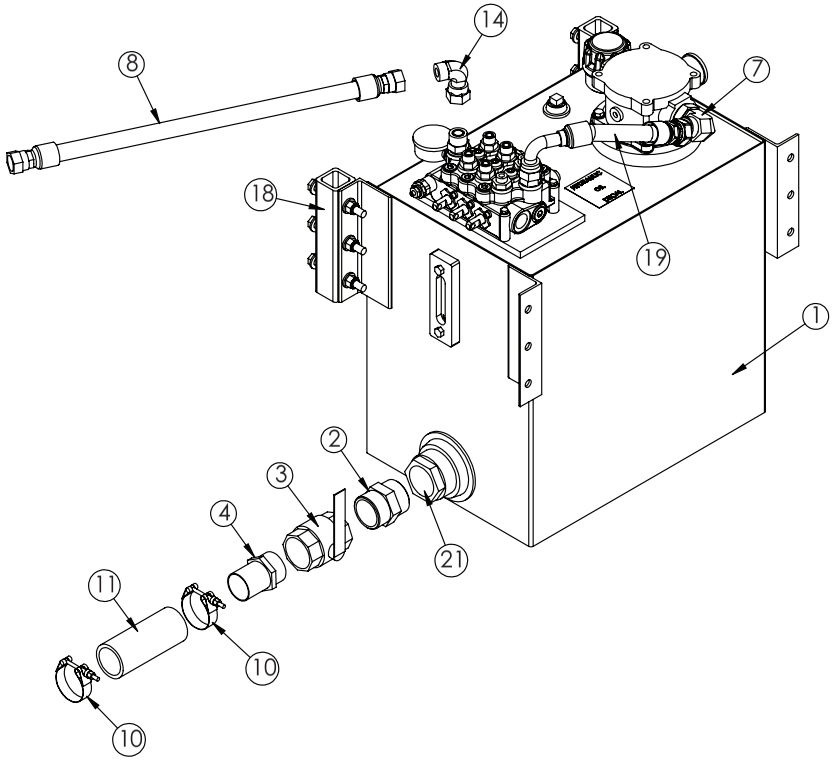

PN 94606

ITEM	PART	DESCRIPTION	QTY.
1	86006	RSRVR ASM 25GAL K MODEL W/ TANK TOP FILTER	1
2	7353	FTG 32-32 MP-MP HEX NIPPLE STRAIGHT	1
3	C4750	VALVE BALL 2.00	1
4	C4730	FTG 32-32 MP-HB STRAIGHT	1
5	91223	VB 3-SECT VDM8 C4-C4-C4-4200MRV-(2-A-3000-B-2500)-LCHA-ZNCT	1
6	0521	WASHER 0.25 LOCK	3
7	60395	FTG 16-20 MFS-MAORB 90	1
8	27119	HOSE 0.75(78C-12-JC-JC-12-12-12-120)	1
9	10094	GAUGE OIL LF 2.5" 0-5000 BM	1
10	C4819	HOSE CLAMP 2.00	2
11	17766	HOSE SUCT 2.00 10FT	1
12	25630	FTG 10-4 MORB-FP STRAIGHT	1
13	d1435	FTG 12-10 MFS-MORB STRAIGHT	1
14	c4903	FTG 12-12 MFS-FFSS 90	1
15	0339	CAP SCR 0.25-20X2.50 HHGR5	3
16	C1855	FTG 6-10 MFS-MORB STRAIGHT	2
17	C2252	FTG 8-10 MFS-MORB STRAIGHT	4
18	83959	MNT KIT RSRVR 25G	1
19	86168	HOSE 0.75(300PSI)-16FFSS SHORT-12FFSS 90 SHORT-8.50CL	1
20	C2142	FTG 12-12 MFS-MORB STRAIGHT	1
21	C6327	FILTER STRAINER 35GAL TF-2030	1

NOTE: ITEMS NOT SHOWN
25941 - DECAL LOADER VB VDM8 HOSE LOCATION X 1
42971 - DECAL OIL FILTER CHANGE X 1
35408 - PORT RELIEF VDM8 2715 PSI X 1
26182 - PORT RELIEF VDM8 2500 PSI X 2

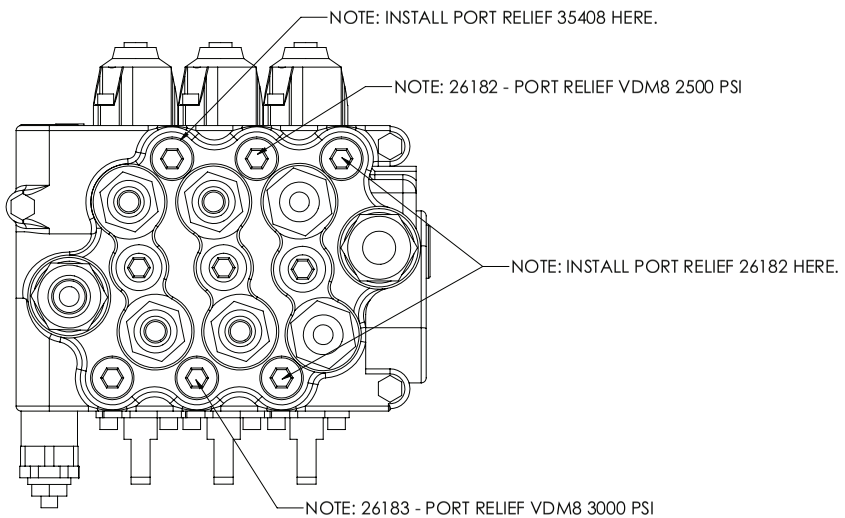

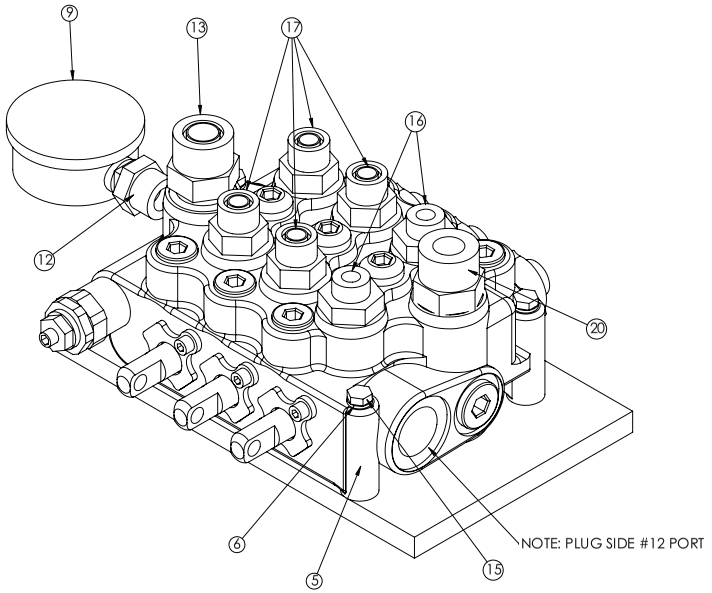

Reservoir Assembly (2 Sectoin Air Controls) - PN 94583

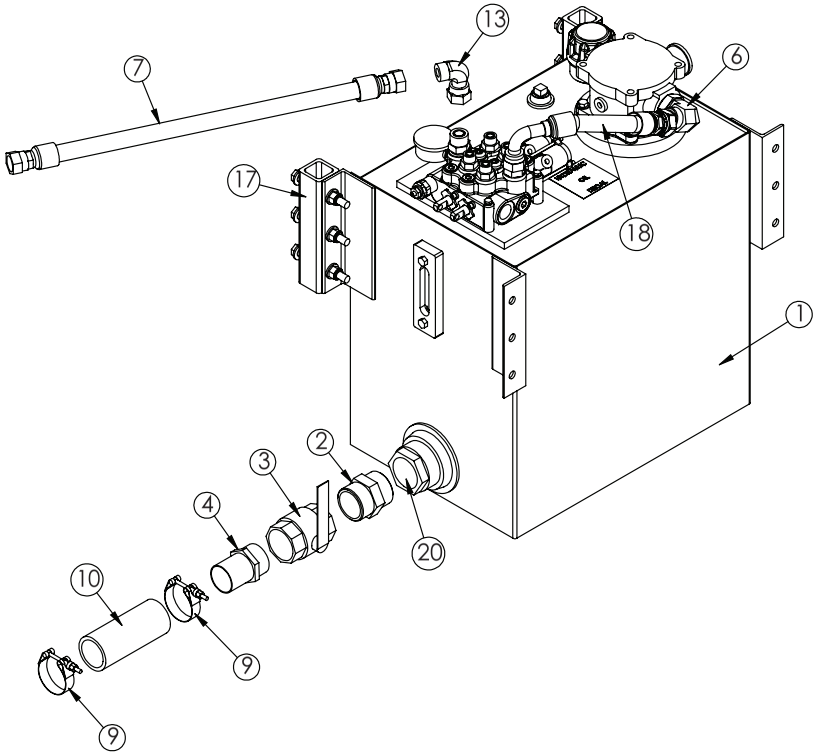

PN 94583

ITEM	PART	DESCRIPTION	QTY.
1	86006	RSRVR ASM 25GAL K MODEL W/ TANK TOP FILTER	1
2	7353	FTG 32-32 MP-MP HEX NIPPLE STRAIGHT	1
3	C4750	VALVE BALL 2.00	1
4	C4730	FTG 32-32 MP-HB STRAIGHT	1
5	0521	WASHER 0.25 LOCK	3
6	60395	FTG 16-20 MFS-MAORB 90	1
7	27119	HOSE 0.75(78C-12-JC-JC-12-12-12-120)	1
8	10094	GAUGE OIL LF 2.5" 0-5000 BM	1
9	C4819	HOSE CLAMP 2.00	2
10	17766	HOSE SUCT 2.00 10FT	1
11	25630	FTG 10-4 MORB-FP STRAIGHT	1
12	d1435	FTG 12-10 MFS-MORB STRAIGHT	1
13	c4903	FTG 12-12 MFS-FFSS 90	1
14	0339	CAP SCR 0.25-20X2.50 HHGR5	3
15	91224	VB 2-SECT VDM8 PAC4-PAC4-4200MRV-(2-A-3000-B-2500)-LCHA-ZNCT	1
16	C2252	FTG 8-10 MFS-MORB STRAIGHT	4
17	83959	MNT KIT RSRVR 25G	1
18	86168	HOSE 0.75(300PSI)-16FFSS SHORT-12FFSS 90 SHORT-8.50CL	1
19	C2142	FTG 12-12 MFS-MORB STRAIGHT	1
20	C6327	FILTER STRAINER 35GAL TF-2030	1

NOTE: ITEMS NOT SHOWN
25941 - DECAL LOADER VB VDM8 HOSE LOCATION X 1
42971 - DECAL OIL FILTER CHANGE X 1
35408 - PORT RELIEF VDM8 2715 PSI

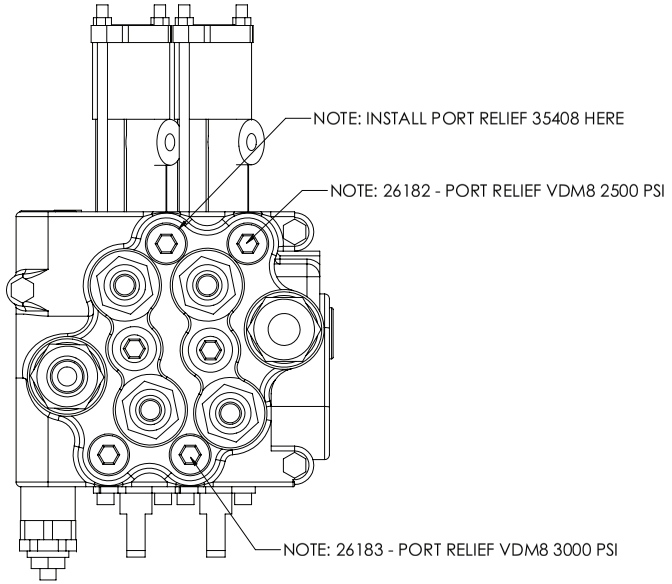

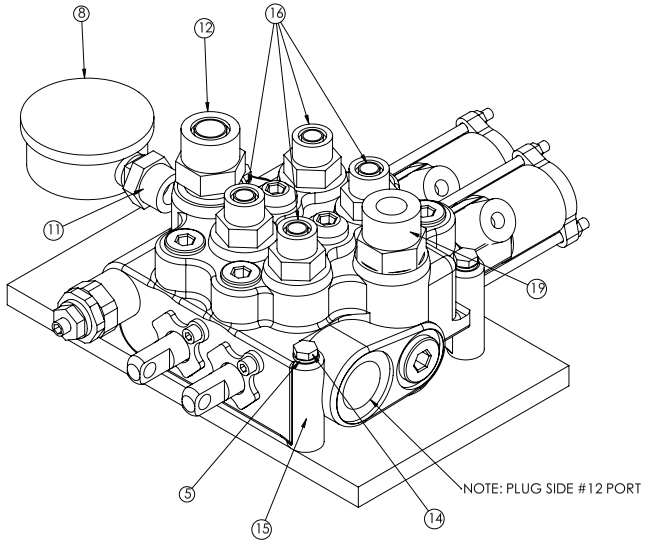

Reservoir Assembly (3 Sectoin Air Controls) - PN 94607

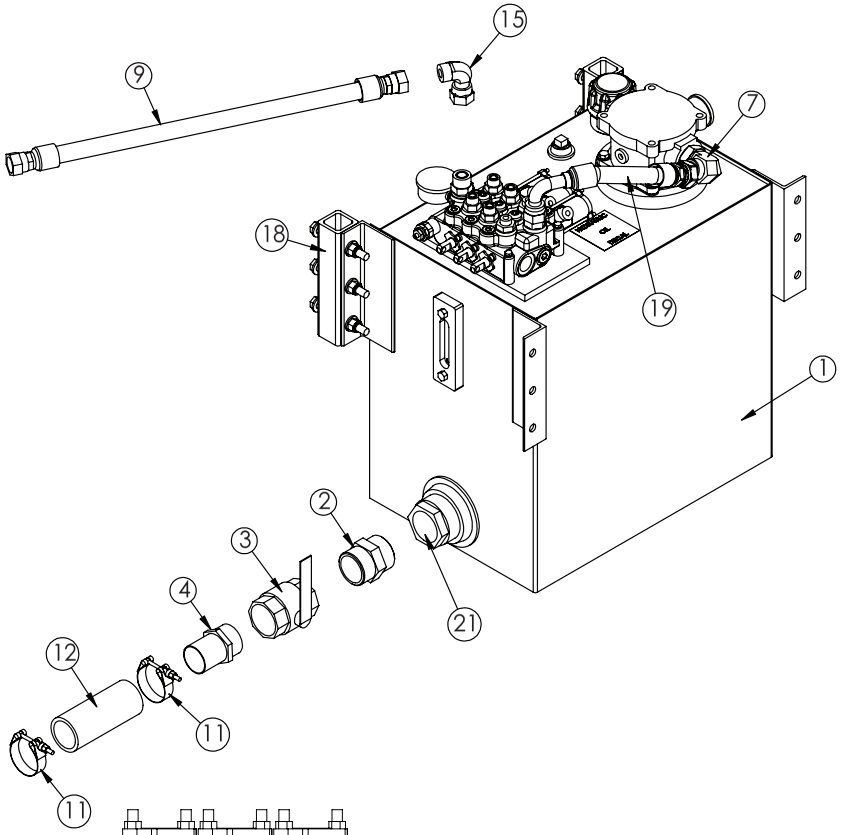

PN 94607

ITEM	PART	DESCRIPTION	QTY.
1	86006	RSRVR ASM 25GAL K MODEL W/ TANK TOP FILTER	1
2	7353	FTG 32-32 MP-MP HEX NIPPLE STRAIGHT	1
3	C4750	VALVE BALL 2.00	1
4	C4730	FTG 32-32 MP-HB STRAIGHT	1
5	91225	VB 3-SECT VDM8 PAC4-PAC4-PAC4-4200MRV-(2-A-3000-B-2500)-LCHA-ZNCT	1
6	0521	WASHER 0.25 LOCK	3
7	60395	FTG 16-20 MFS-MAORB 90	1
8	C1855	FTG 6-10 MFS-MORB STRAIGHT	2
9	27119	HOSE 0.75(78C-12-JC-JC-12-12-12-120)	1
10	10094	GAUGE OIL LF 2.5" 0-5000 BM	1
11	c4819	HOSE CLAMP 2.00	2
12	17766	HOSE SUCT 2.00 10FT	1
13	25630	FTG 10-4 MORB-FP STRAIGHT	1
14	d1435	FTG 12-10 MFS-MORB STRAIGHT	1
15	c4903	FTG 12-12 MFS-FFSS 90	1
16	0339	CAP SCR 0.25-20X2.50 HHGR5	3
17	C2252	FTG 8-10 MFS-MORB STRAIGHT	4
18	83959	MNT KIT RSRVR 25G	1
19	86168	HOSE 0.75(300PSI)-16FFSS SHORT-12FFSS 90 SHORT-8.50CL	1
20	C2142	FTG 12-12 MFS-MORB STRAIGHT	1
21	C6327	FILTER STRAINER 35GAL TF-2030	1

NOTE: ITEMS NOT SHOWN
25941 - DECAL LOADER VB VDM8 HOSE LOCATION X 1
42971 - DECAL OIL FILTER CHANGE X 1
35408 - PORT RELIEF VDM8 2715 PSI X 1
26182 - PORT RELIEF VDM8 2500 PSI X2

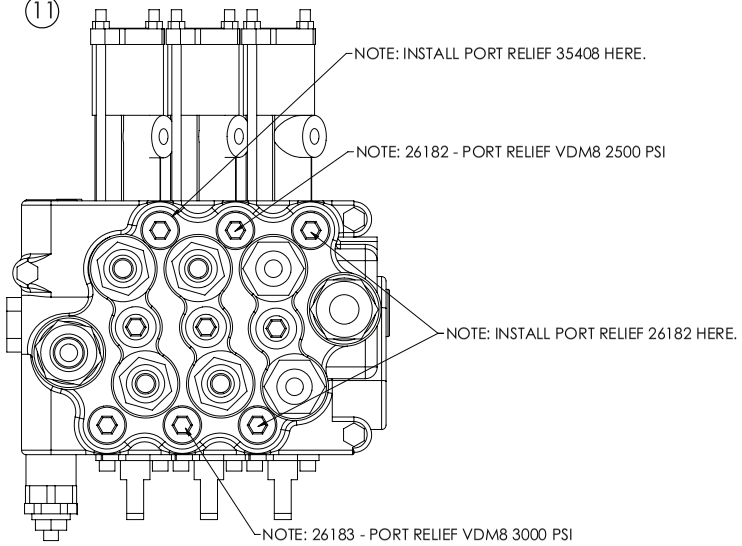

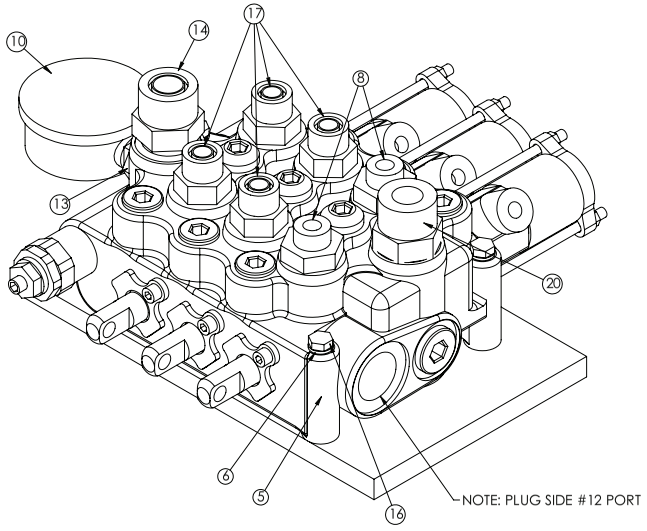

Reservoir Subassembly - PN 86006

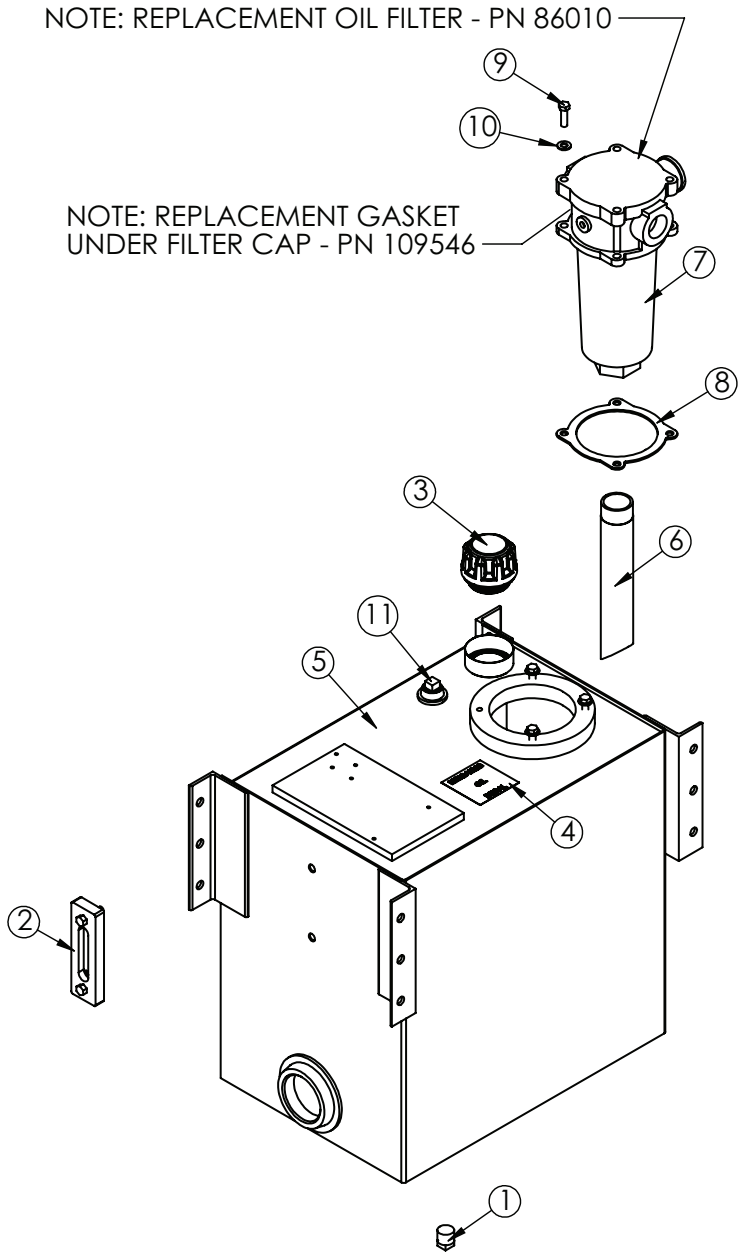

PN 86006

ITEM	PART	DESCRIPTION	QTY
1	C2126	MAGNETIC PLUG DRAIN 3/4"	1
2	15463	THERMO SIGHT GAUGE ZINGA SG-O5-A-T-N	1
3	73278	CAP FILL 1PSI ZINGA THREADED	1
4	13002	DECAL HYD OIL SPECIFICATION MOBIL	1
5	86007	RSRVR 25GAL K MODEL W/ TANK TOP FILTER	1
6	66656	FILTER PIPE TANK TOP	1
7	85928	FILTER TANK TOP 20 FORB	1
8	58396	GASKET RG-11 TANK TOP FILTER	1
9	0335	CAP SCR 0.38-16X1.25 HHGR5	4
10	C6353	WASHER 0.38 SAE FLAT YELLOW GR8	4
11	C4845	PLUG 0.75 NPT SQ HD BLK	1

Valve Bank Parts Drawing

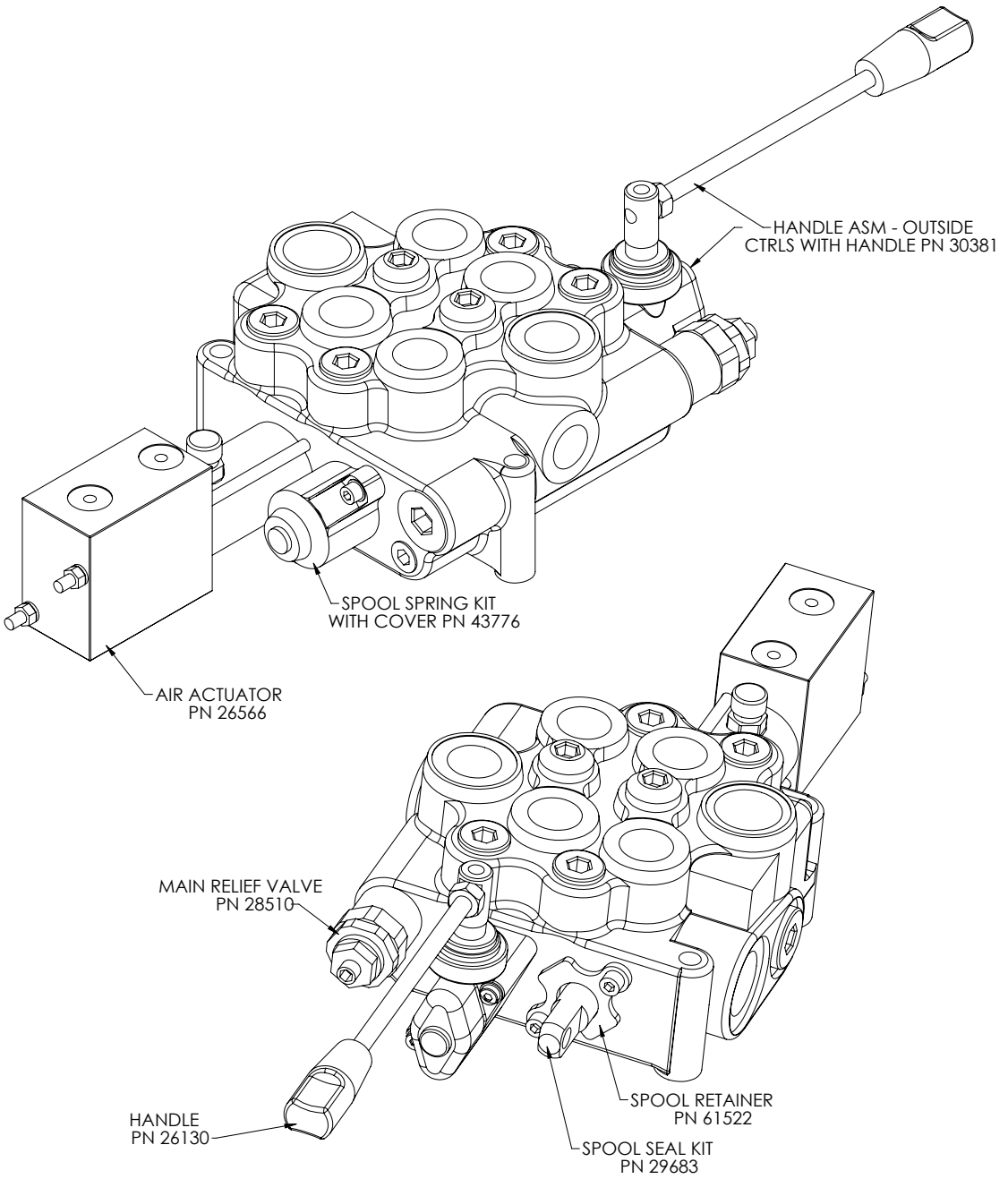

Face Seal/O-Ring Size Chart

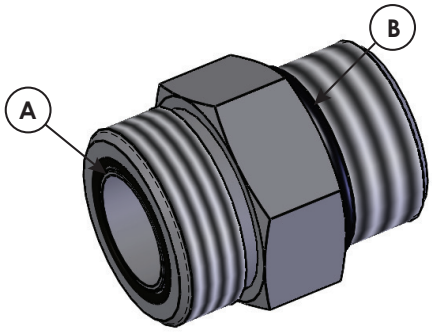

Hose Size	Fitting Size	Face Seal (A) Stellar® PN	O-ring Boss (B) Stellar® PN
1/4"	#4	C2027	D1245
3/8"	#6	C2028	D1246
1/2"	#8	C2029	D1247
5/8"	#10	32223	D1248
3/4"	#12	D1244	D1249
1"	#16		D1250

Step 7: Install PTO and pump.

• Before installing the pump to the PTO, always check the direction of the PTO output shaft to determine which direction the hydraulic pump needs to rotate to operate the equipment. If this is not determined prior to installing the hydraulic pump, the hydraulic pump may rotate in the incorrect direction and damage the front shaft seal.

PTO Direction of Rotation Tip:
Viewed by standing at the rear of the vehicle, looking forward at the PTO shaft, with the PTO shaft pointing toward the rear of the vehicle:

P.T.O.	Driven Equipment
Rotates Opposite Engine (looks "clockwise)	Driven equipment must rotate counterclockwise (also called left-hand rotation, "A" for anti-clockwise or C.C.W. for counter clockwise).
Rotates With Engine (looks "counterclockwise")	Driven equipment must rotate clockwise (also called right-hand rotation or "C" for clockwise).

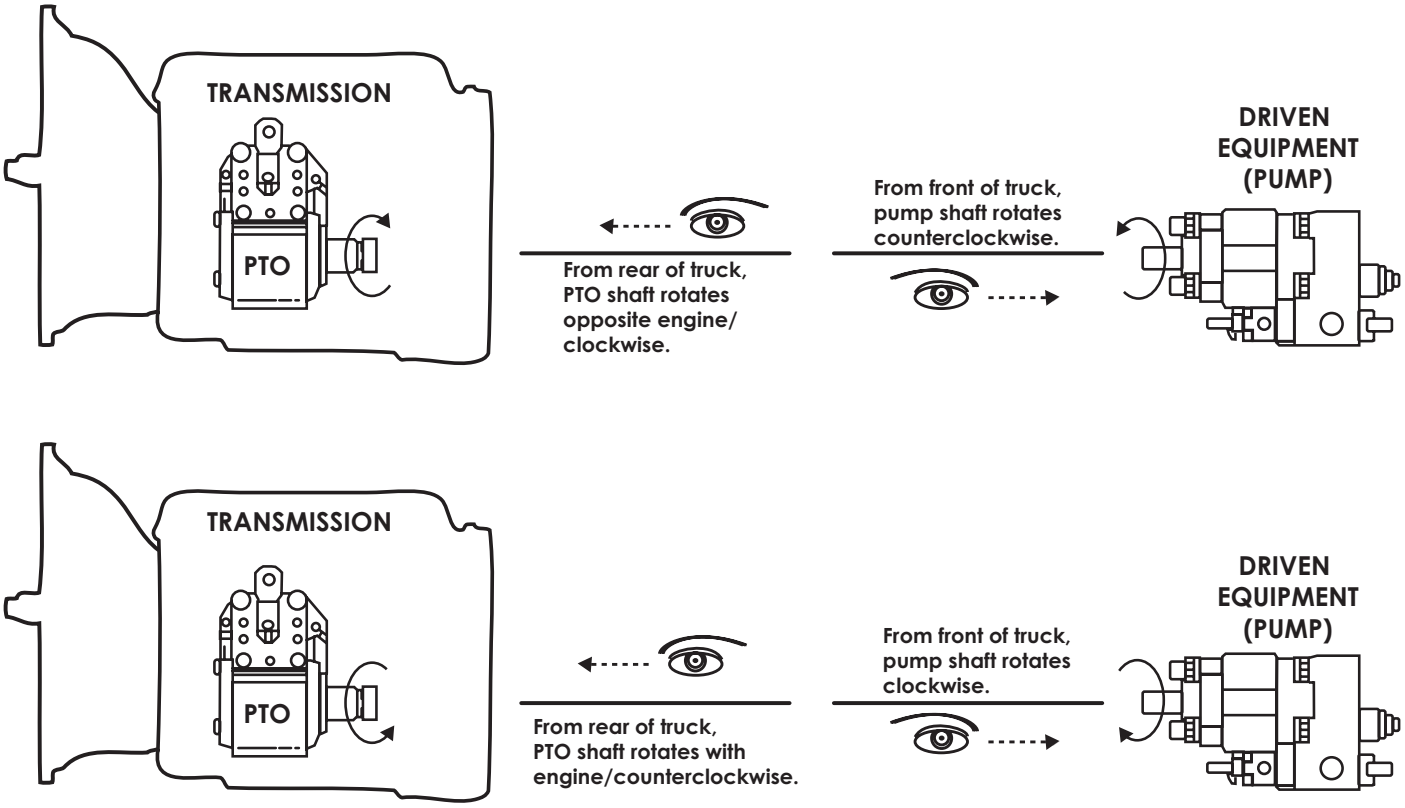

Remember that the PTO is specified by looking from the rear of the truck to the front of the truck. The driven equipment (pump) is specified by looking from the front of the truck to the rear of the truck.

• Use the brand specific PTO/Pump installation instructions. If the directions are not quite clear, contact Stellar® Customer Service or consult with a hydraulic specialty house or company prior to installation.

Step 8: Route hydraulic hoses.

1. Route hose line from the reservoir to the pump (See hose kit drawing for details).
2. Route hose line from the pump to the valve bank (See hose kit drawing for details).
3. Route hose line from the valve bank to the reservoir (See hose kit drawing for details).
4. Route hose line from the valve bank and the hooklift (See hose kit drawing for details).

Note: If using the Power Beyond feature for additional function, see "Power Beyond VDM8 Valve" later in this chapter for further details.

Notes on hose line routing:

- Protect these lines with hose wrap when necessary.
- Keep these lines away from sharp edges.
- Keep these lines away from the exhaust or other temperature extreme items.
- Keep these lines away from the driveshaft or other moving items.

Hose Kit - PN 117666 (Manual Adjustable Hook Height Models)

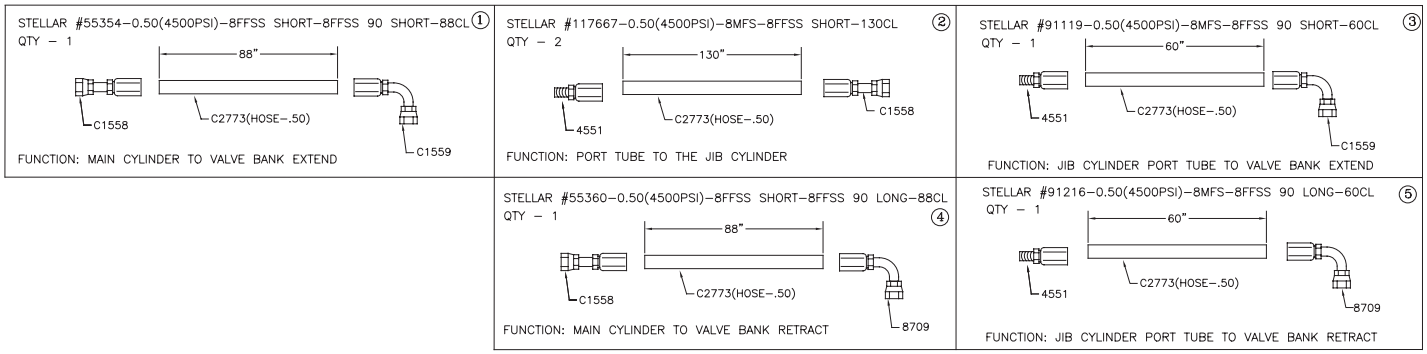

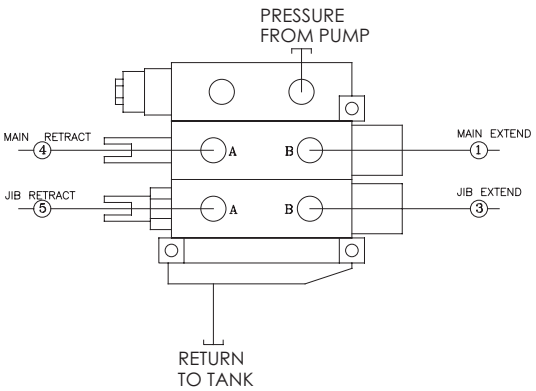

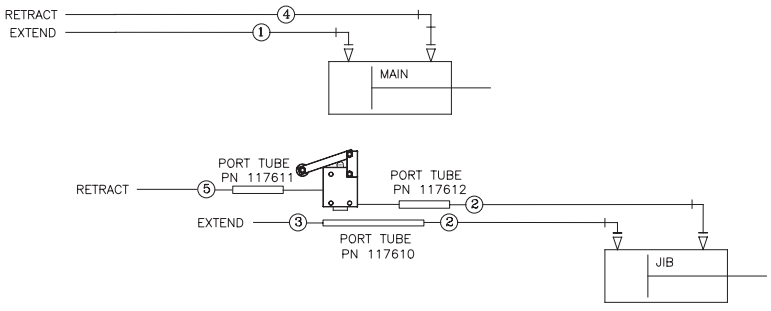

NOTE: SYSTEM PRESSURE IS 4500 P.S.I.

ITEM	PART No.	DESCRIPTION	QTY
05	91216	HOSE 0.50(4500PSI)-8MFS-8FFSS 90 LONG-60CL	1
04	55360	HOSE 0.50(4500PSI)-8FFSS SHORT-8FFSS 90 LONG-88CL	1
03	91119	HOSE 0.50(4500PSI)-8MFS-8FFSS 90 SHORT-60CL	1
02	117667	HOSE 0.50(4500PSI)-8MFS-8FFSS SHORT-130CL	2
01	55354	HOSE 0.50(4500PSI)-8FFSS SHORT-8FFSS 90 SHORT-88CL	1

Hose Kit - PN 113679 (Hydraulic Adjustable Hook Height Models)

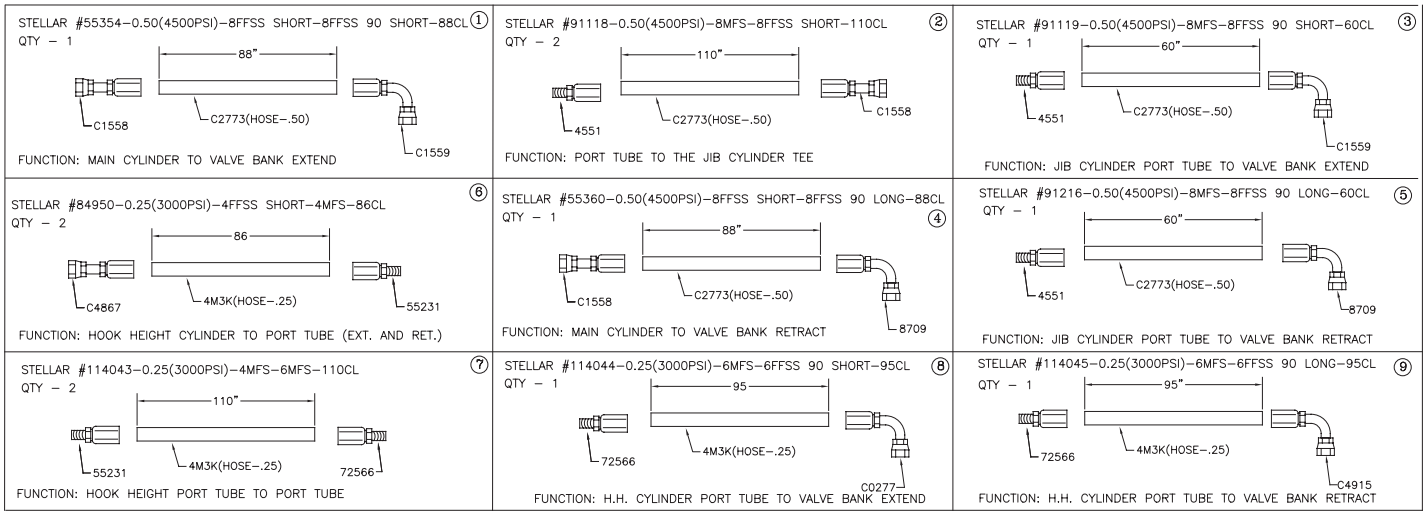

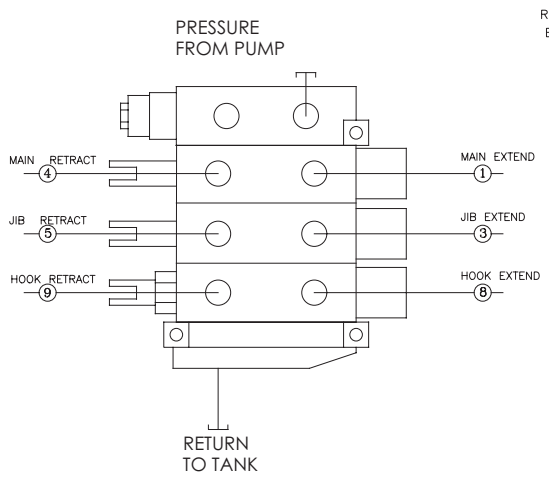

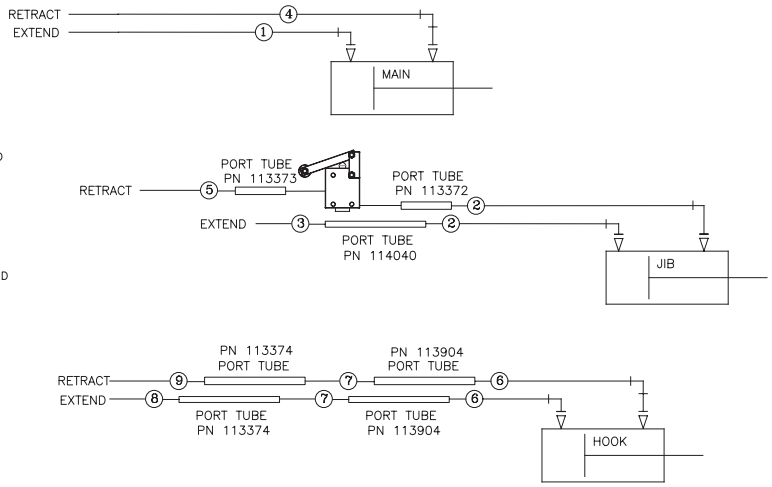

ITEM	PART No.	DESCRIPTION	QTY
09	114045	HOSE 0.25(3000PSI)-6MFS-6FFSS 90 LONG-95CL	1
08	114044	HOSE 0.25(3000PSI)-6MFS-6FFSS 90 SHORT-95CL	1
07	114043	HOSE 0.25(3000PSI)-4MFS-6MFS-110CL	2
06	84950	HOSE 0.25(3000PSI)-4FFSS SHORT-4MFS-86CL	2
05	91216	HOSE 0.50(4500PSI)-8MFS-8FFSS 90 LONG-60CL	1
04	55360	HOSE 0.50(4500PSI)-8FFSS SHORT-8FFSS 90 LONG-88CL	1
03	91119	HOSE 0.50(4500PSI)-8MFS-8FFSS 90 SHORT-60CL	1
02	91118	HOSE 0.50(4500PSI)-8MFS-8FFSS SHORT-110CL	2
01	55354	HOSE 0.50(4500PSI)-8FFSS SHORT-8FFSS 90 SHORT-88CL	1

Power Beyond VDM8 Valve

These instructions are intended for correct installation of power beyond on a Salami VDM8 valve bank. If any hydraulic component is integrated after this valve the power beyond must be installed correctly, or serious damage may incur to the hydraulic system.

1. Remove cover / access plug to reveal the power beyond access point. Can also be used as the Return / Tank port.

2. Install one (either 1/2” or 3/8”) plug from kit number:122069 into lower portion of cavity to activate the power beyond feature. Use thread sealer. (Tape sealers not recommended.)

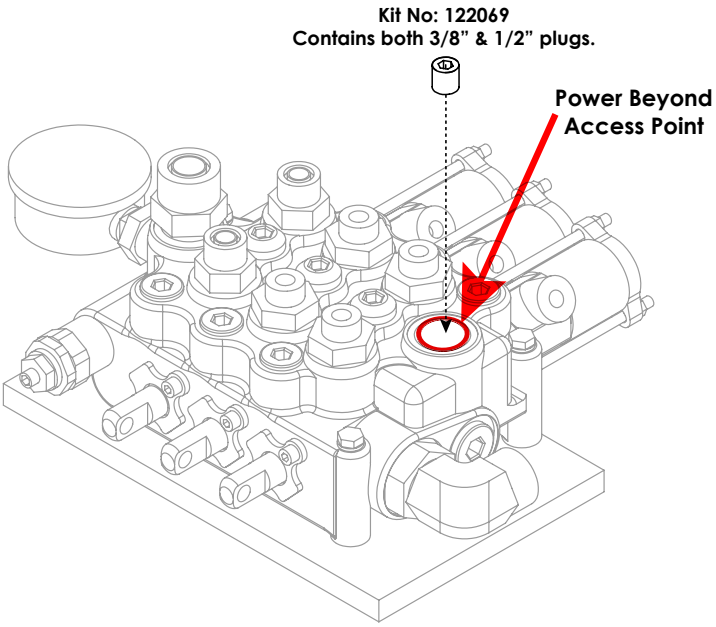

3. The Power Beyond feature is now activated and will divert oil to alternate system via the port shown.

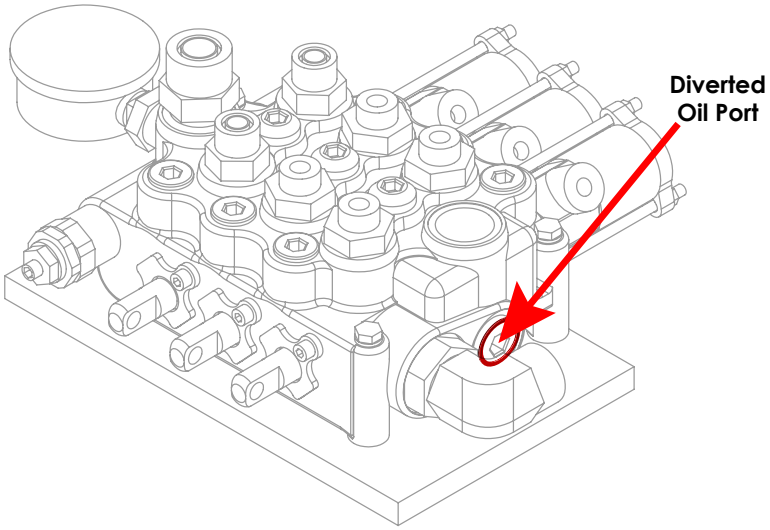

NOTES:

- **THE RETURN / TANK LINE MUST BE CONNECTED TO THE TOP OR THE SIDE PORT, LABELED “T”.**
- **USING THE RETURN LINE TO RUN AUXILIARY EQUIPMENT WILL DIRECTLY RESULT IN A FAILURE, AND WILL NOT IN ANY CIRCUMSTANCE, BE COVERED UNDER WARRANTY.**
- **A STANDARD STELLAR® HOOKLIFT WILL HAVE 6 HYDRAULIC LINES ATTACHED TO THE VALVE. WITH POWER BEYOND ACTIVATED, THEY WILL HAVE 7 HYDRAULIC LINES ATTACHED TO THE VALVE.**

Step 9: Route Electrical Components

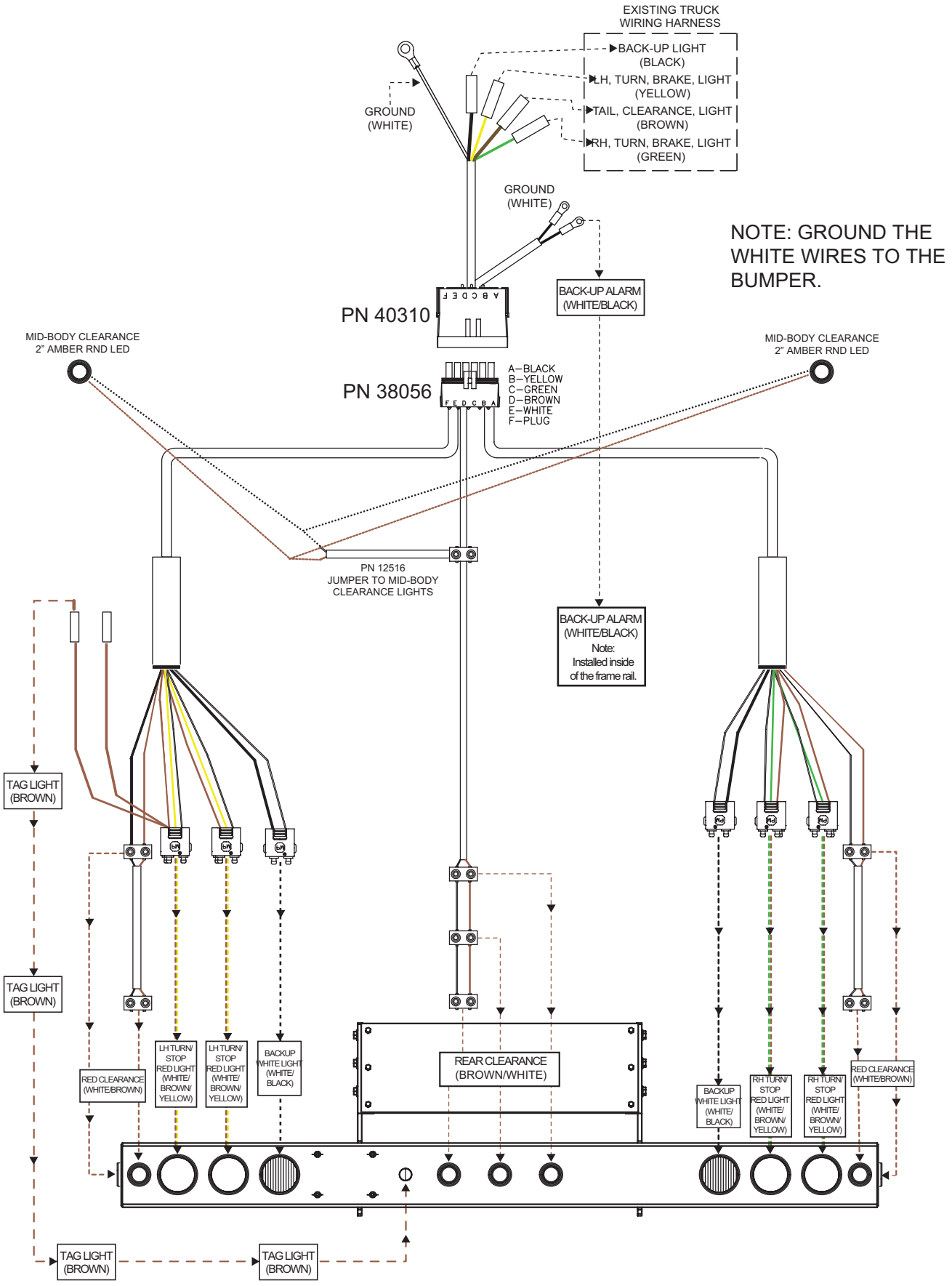

Step 10: Install cab and PTO controls.

- Use PTO brand specific installation instructions.
- For cab controls, see controller assembly drawings for details:

Cable Controls

In Cab Installation

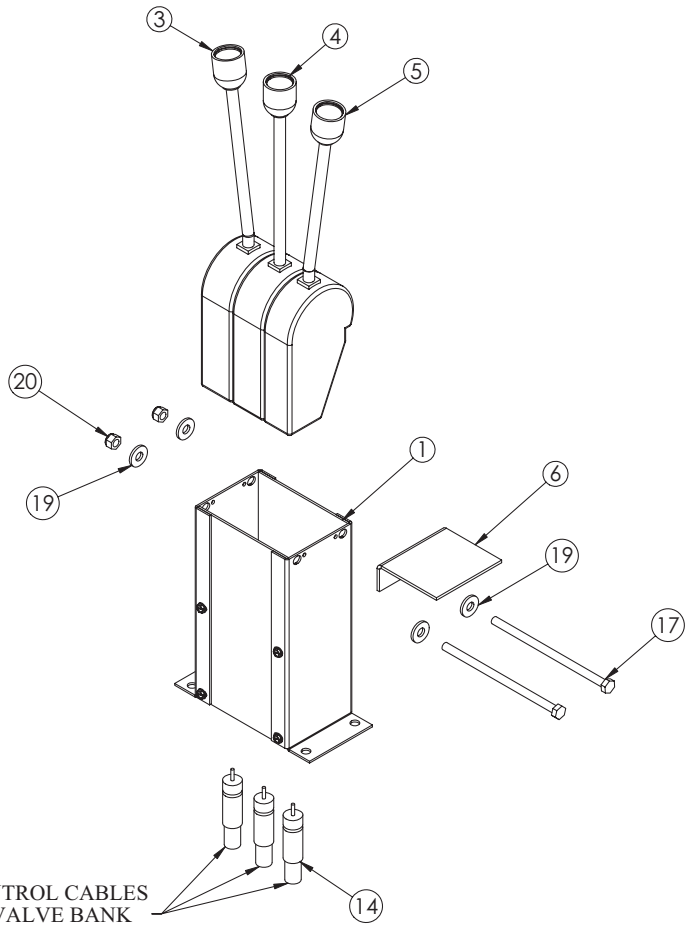

	2 SECTION	3 SECTION
96 INCH	PN 55534	PN 54746
144 INCH	PN 55540	PN 54747
192 INCH	PN 55541	PN 54748

At Valve Installation

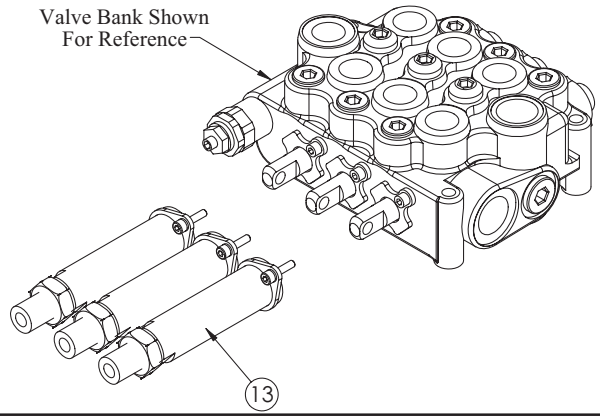

ITEM	PART	DESCRIPTION	QTY.
1	38351	VALVE CTRL CONSOLE 3LEVER RVC (3 Section Only)	1
1	37470	VALVE CTRL CONSOLE 2LEVER RVC (2 Section Only)	1
3	37475	CONTROLLER CTR LOCK LEFT BEND	1
4	37476	CONTROLLER CTR LOCK NO BEND (3 Section Only)	1
5	37474	CONTROLLER CTR LOCK RIGHT BEND	1
6	25933	BRKT CONTROLLER DECAL	1
13	37469	CABLE CONN. KIT FOR VD8A/VDM8	2/3
14	37471	CONTROL CABLE 96 IN WESCON	2/3
14	37472	CONTROL CABLE 144 IN WESCON	2/3
14	37473	CONTROL CABLE 192 IN WESCON	2/3
17	20057	CAP SCR 0.31-18X6.50 HHGR5 (3 Section Only)	2
17	0491	CAP SCR 0.31-18X4.00 HHGR5 (2 Section Only)	2
19	0343	WASHER 0.31 USS FLAT ZINC	4
20	0342	NUT 0.31-18 HHGR5 NYLOC	2

Air Controls 2-Section - PN 75868

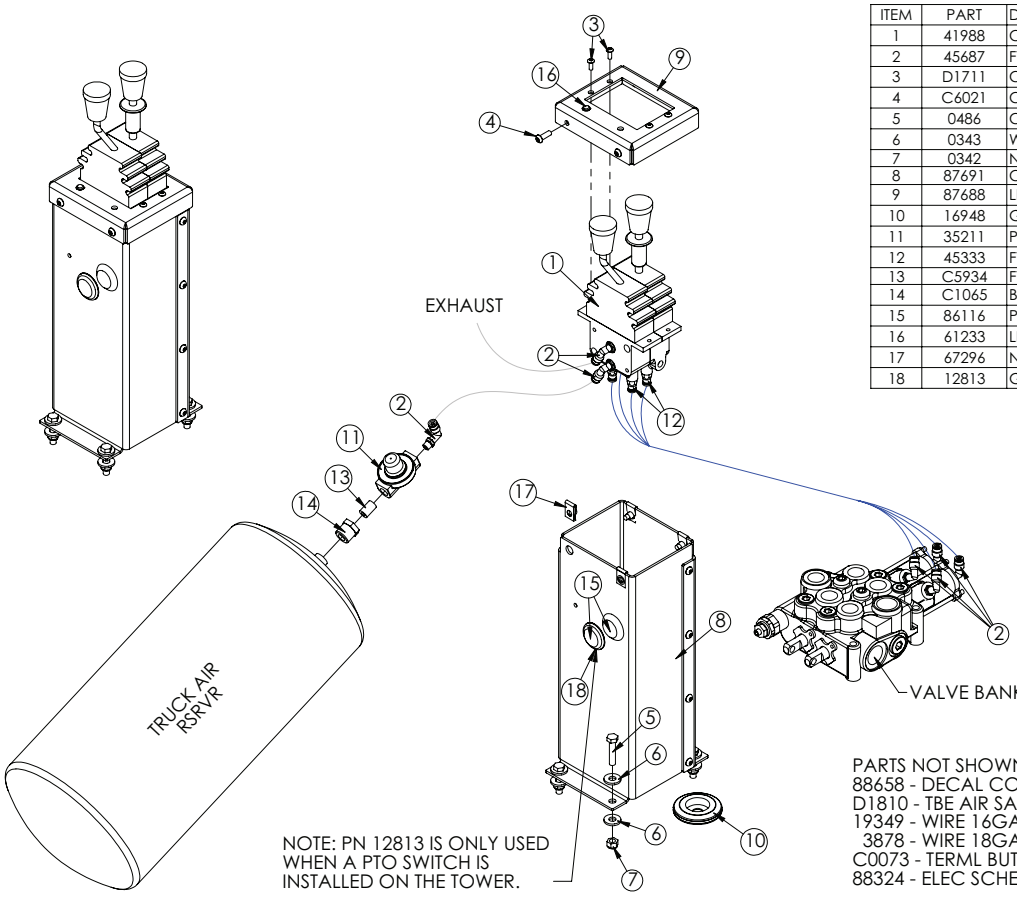

ITEM	PART	DESCRIPTION	QTY.
1	41988	CTRL 2 BANK 4WAY AIR CNTR LOCK	1
2	45687	FTG 4-2 MP-PTC 90 BRASS 1169X4S	7
3	D1711	CAP SCR #10-24X0.50 BTNHD SS	4
4	C6021	CAP SCR 0.25-20X0.75 BTNHD SS	4
5	0486	CAP SCR 0.31-18X1.50 HHGR5	4
6	0343	WASHER 0.31 USS FLAT	8
7	0342	NUT 0.31-18 HHGR5 NYLOC	4
8	87691	CONTROL TOWER SUB-ASM 2-SECT HOOKLIFT	1
9	87688	LID CONTROL TOWER 2-SECT HOOKLIFT	1
10	16948	GROMMET 2.50ODX0.125X0.25ID	1
11	35211	PTO AIR REGULATOR 378414	1
12	45333	FTG 4-2 PC DOT-MP STRAIGHT	4
13	C5934	FTG 4-4XCLOSE MP-MP NIPPLE STRAIGHT BLK	1
14	C1065	BUSHING 0.50X0.25 BLK	1
15	86116	PLUG PLASTIC 1.13 HOLE BLK	2
16	61233	LIGHT LED CONTROL PANEL RED	1
17	67296	NUT CLIP ON .25X.025-.15X.53	4
18	12813	GROMMET 1.25ODX0.125X0.625ID	1

PARTS NOT SHOWN:
88658 - DECAL CONTROL TOWER LID SLIDER 2SEC X 1
D1810 - TBE AIR SAEJ844 TYPE A .25 (RM) X 60FT
19349 - WIRE 16GA (RM) BLUE SAE J-1128 X 15FT
3878 - WIRE 18GA (RM) RED (PRIMARY) SAE J-1128 X 15FT
C0073 - TERML BUTT 16-14GA HS BLUE X 2
88324 - ELEC SCHEM CONTROL TOWER

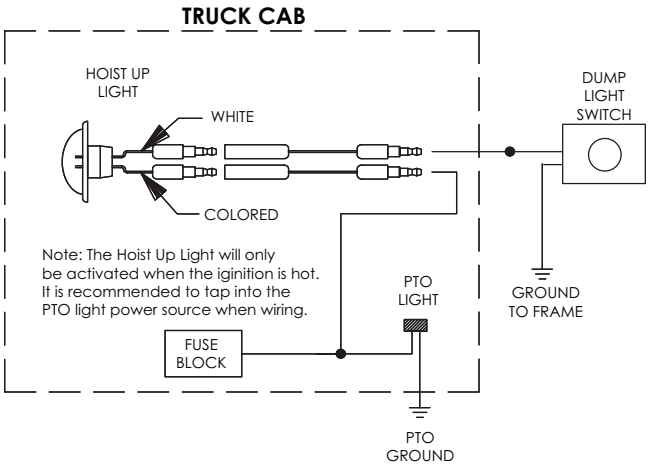

Air Controls 3-Section - PN 88647

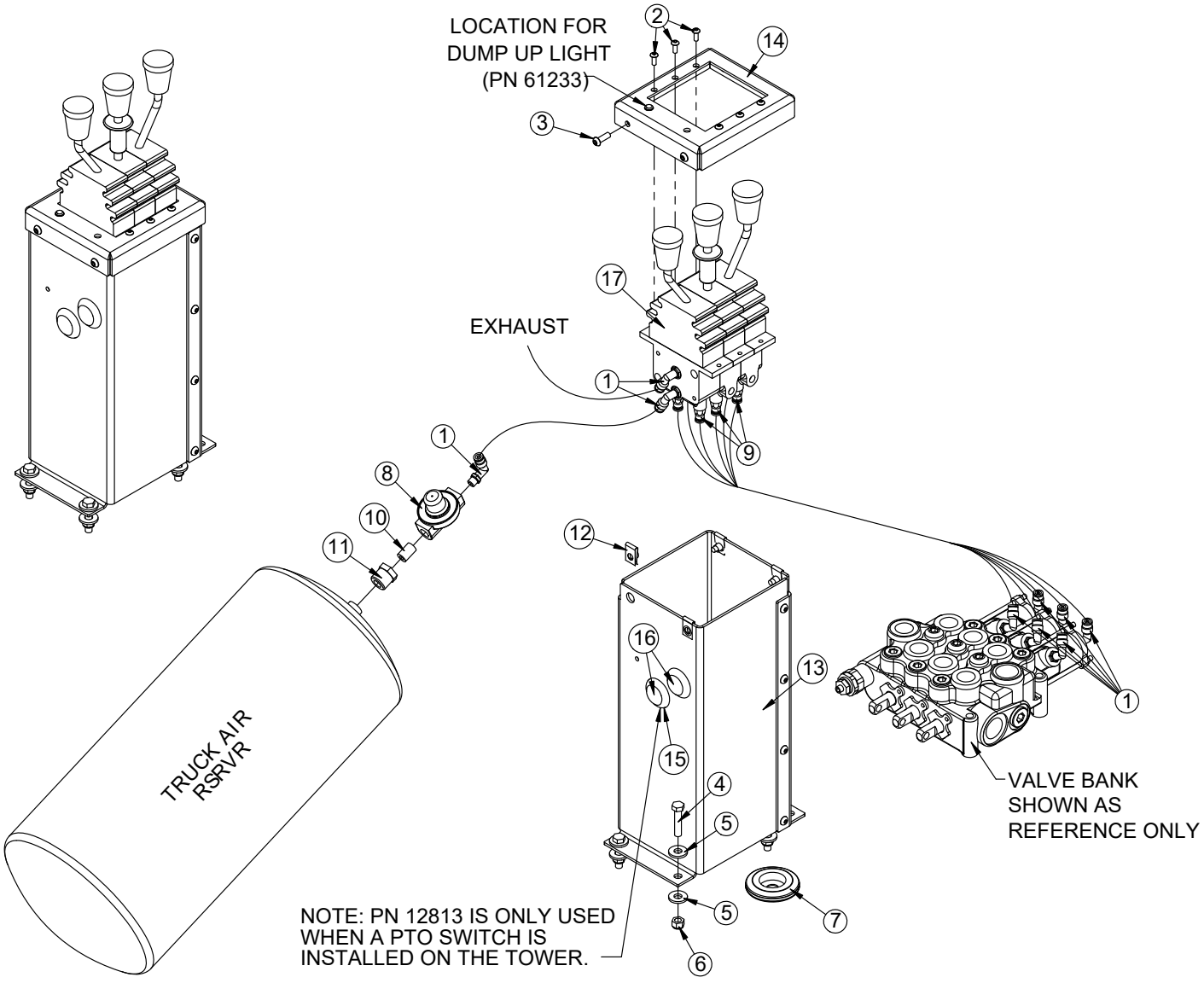

Air Controls 3-Section - PN 88647 Parts List

PN 88647			
ITEM	**PART**	**DESCRIPTION**	**QTY**
1	45687	FTG 4-2 MP-PTC 90 BRASS 1169X4S	9
2	D1711	CAP SCR #10-24X0.50 BTNHD SS	6
3	C6021	CAP SCR 0.25-20X0.75 BTNHD SS	4
4	0486	CAP SCR 0.31-18X1.50 HHGR5	4
5	0343	WASHER 0.31 USS FLAT	8
6	0342	NUT 0.31-18 HHGR5 NYLOC	4
7	16948	GROMMET 2.50ODX1.56GDX0.13X0.56ID	1
8	35211	PTO AIR REGULATOR 378414	1
9	45333	FTG 4-2 PC DOT-MP STRAIGHT	6
10	C5934	FTG 4-4XCLOSE MP-MP NIPPLE STRAIGHT BLK	1
11	C1065	BUSHING 0.50X0.25 BLK	1
12	67296	NUT CLIP ON .25X.025-.15X.53	4
13	88654	CONTROL TOWER SUB-ASM 3-SECT HOOKLIFT	1
14	88653	LID CONTROL TOWER 3-SECT HOOKLIFT	1
15	12813	GROMMET 1.50ODX1.25GDX0.13X0.63ID	1
16	86116	PLUG PLASTIC 1.13 HOLE BLK	2
17	41989	CTRL 3 BANK 4-WAY PNEUMATIC	1
REV. A R883			

ITEMS NOT SHOWN		
PART	**DESCRIPTION**	**QTY**
88659	DECAL CONTROL TOWER LID SLIDER 3SEC	1
D1810	TBE AIR SAEJ844 TYPE A .25 (RM)	95 FT

Air Controls - Isuzu - PN 125016

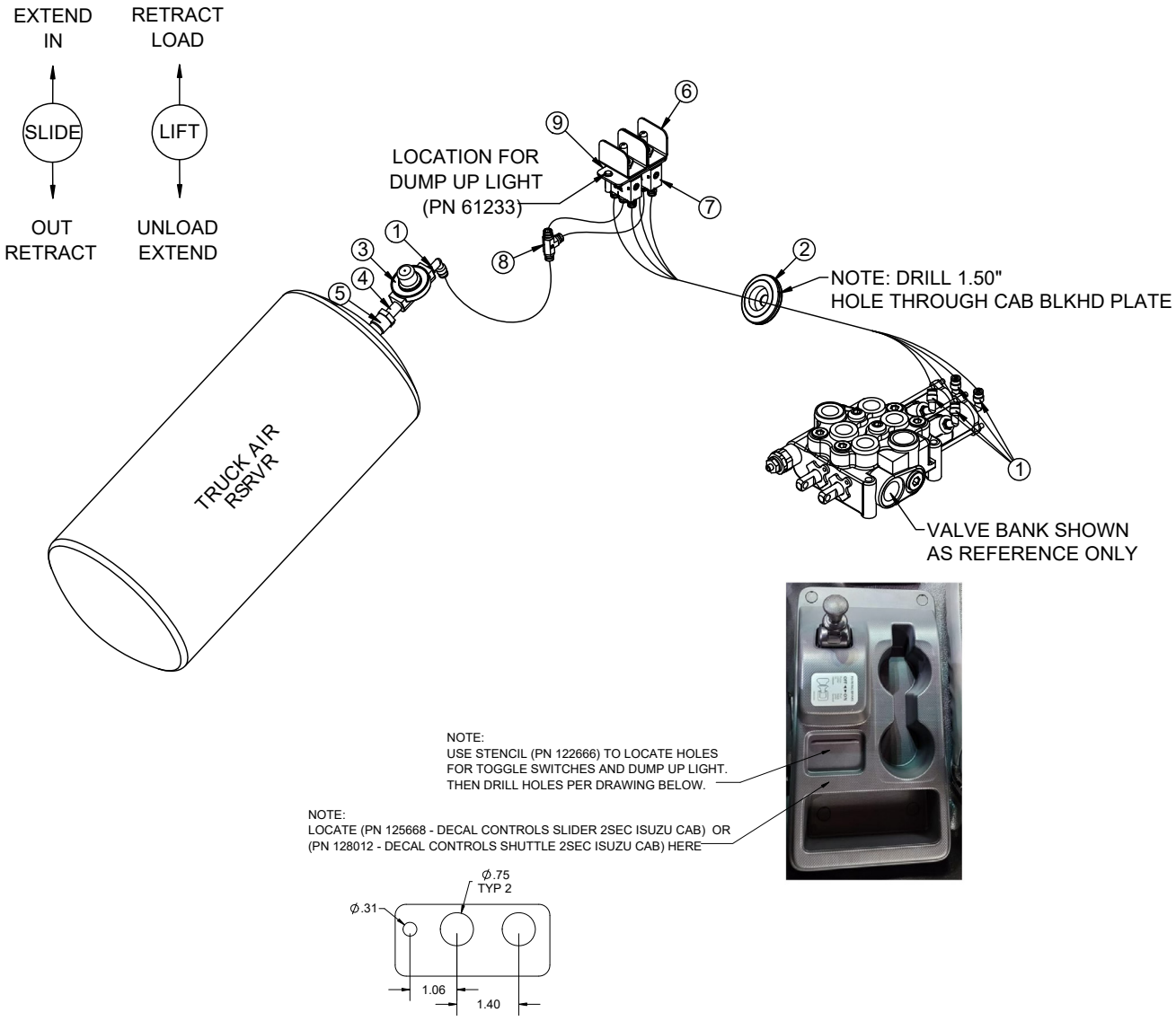

PN 125016			
ITEM	**PART**	**DESCRIPTION**	**QTY**
1	45687	FTG 4-2 MP-PTC 90 BRASS 1169X4S	5
2	16948	GROMMET 2.50ODX1.56GDX0.13X0.56ID	1
3	35211	PTO AIR REGULATOR 378414	1
4	C5934	FTG 4-4XCLOSE MP-MP NIPPLE STRAIGHT BLK	1
5	C1065	BUSHING 0.50X0.25 BLK	1
6	120864	GUARD FOR AIR TOGGLE VALVE APSCO VTS-1X	2
7	122665	AIR TOGGLE VALVE APSCO VTS-1X	2
8	106522	FTG 4-4-4 PTC-PTC-PTC TEE BRASS DOT	1
9	122666	PLATE STENCIL AIR TOGGLES ISUZU FTR CONSOLE	1

ITEMS NOT SHOWN		
PART	**DESCRIPTION**	**QTY**
D1810	TBE AIR SAEJ844 TYPE A .25 (RM)	110
125668	DECAL CONTROLS SLIDER 2SEC ISUZU CAB	1
128012	DECAL CONTROLS SHUTTLE 2SEC ISUZU CAB	1

Step 11: Install Hoist Up Light Sensor - PN 83115

Install the hoist up light sensor onto the base of the hooklift as shown:

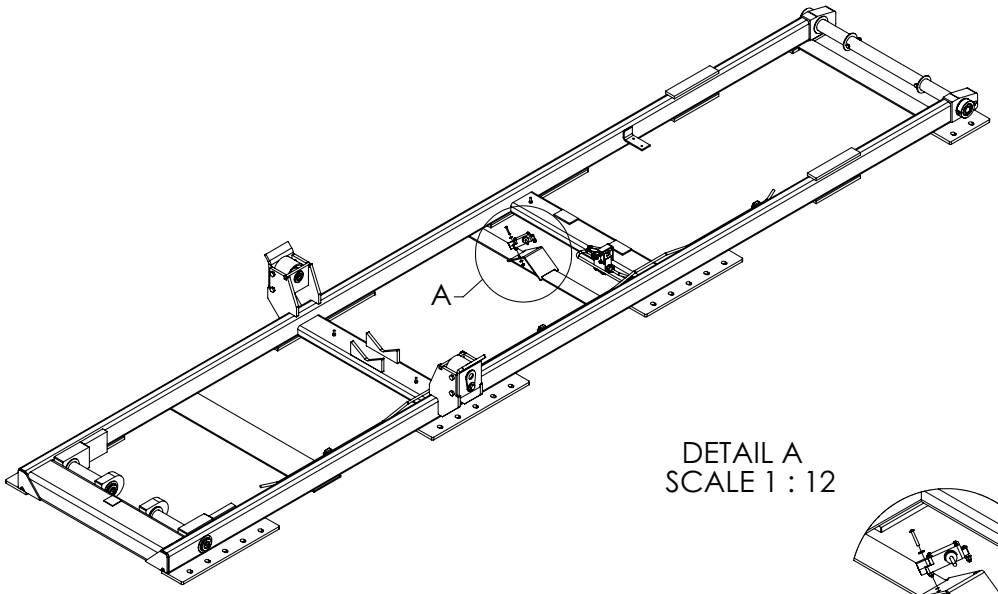

DETAIL A
SCALE 1 : 12

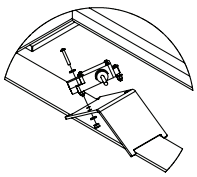

ITEM	PART	DESCRIPTION	QTY.
1	45907	SWITCH REMOTE KP60	1
2	30472	CAP SCR #10-24X1.25 BTNHD SS	3
3	D0178	WASHER #10 SAE FLAT	6
4	26034	NUT #10-24 HH NYLOC	3

ITEMS NOT SHOWN:
C0073 - TERML 16-14 BLUE BUTT WATER TIGHT X 1
29409 - TERML 12-10X.31 RING X 1

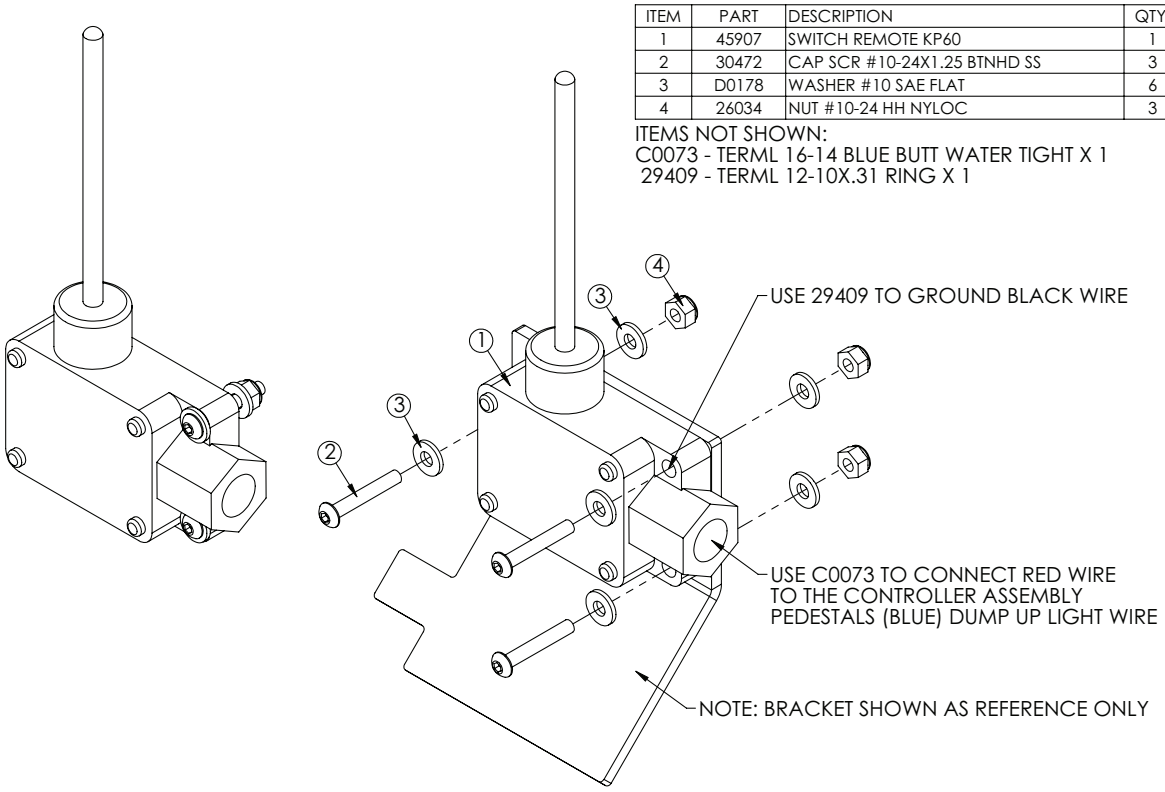

Step 12: Install mud flaps and fenders.

See brand specific installation instructions.

Step 13A: Apply Hooklift Assembly Decals

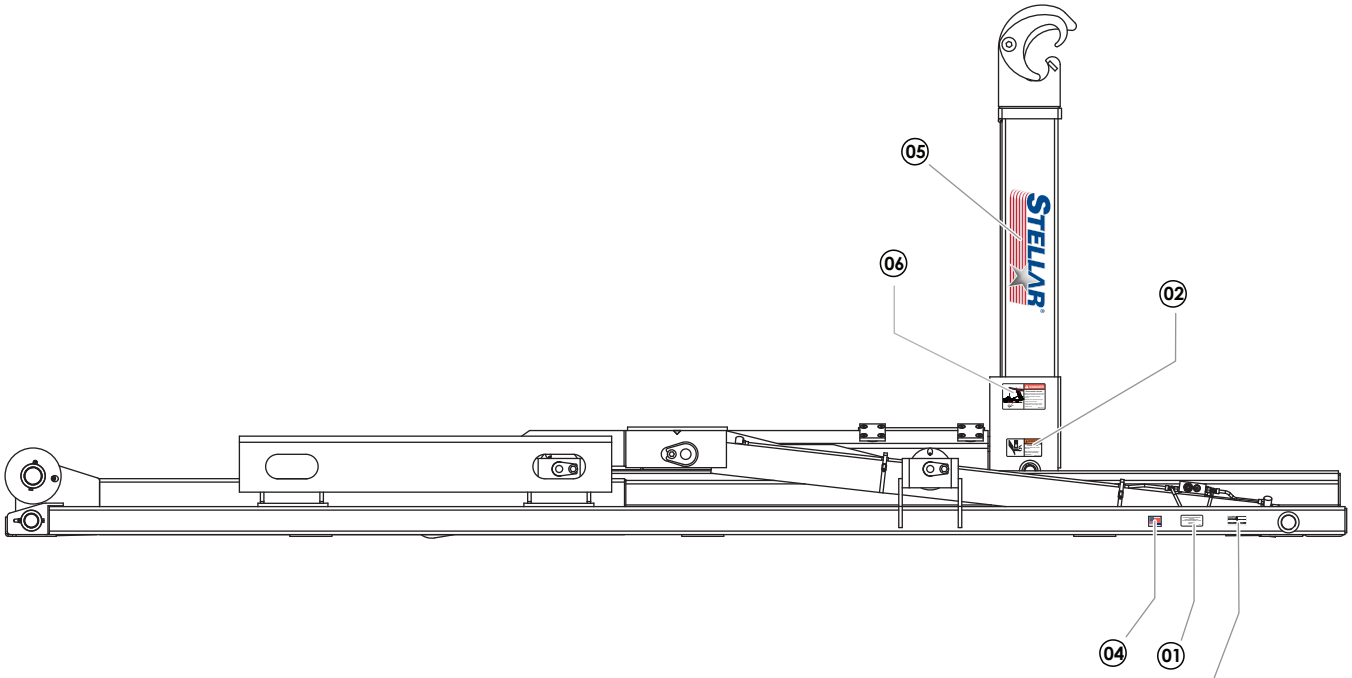

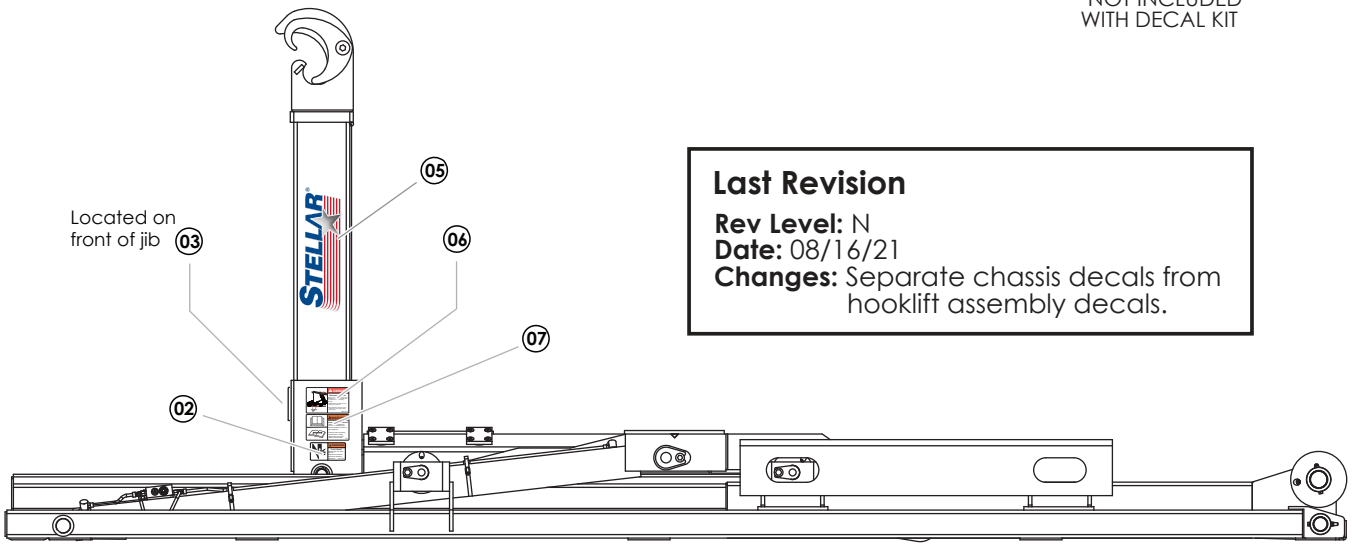

Last Revision

Rev Level: N
Date: 08/16/21
Changes: Separate chassis decals from hooklift assembly decals.

PN 31827

ITEM	PART No.	DESCRIPTION	QTY.
01	4214	DECAL CONTACT STELLAR	1
02	25627	DECAL WARNING CRUSH	2
03	45955	DECAL WARNING HOOK HEIGHT MATCH	1
04	35234	DECAL STELLAR MADE IN THE USA	1
05	52681	DECAL STELLAR LOGO 6.00X16.50	2
06	55832	DECAL DANGER ELECTROCUTION HOOK	2
07	68024	DECAL WARNING UNTRAINED OPERATOR	1

Step 13B: Apply Chassis Decals

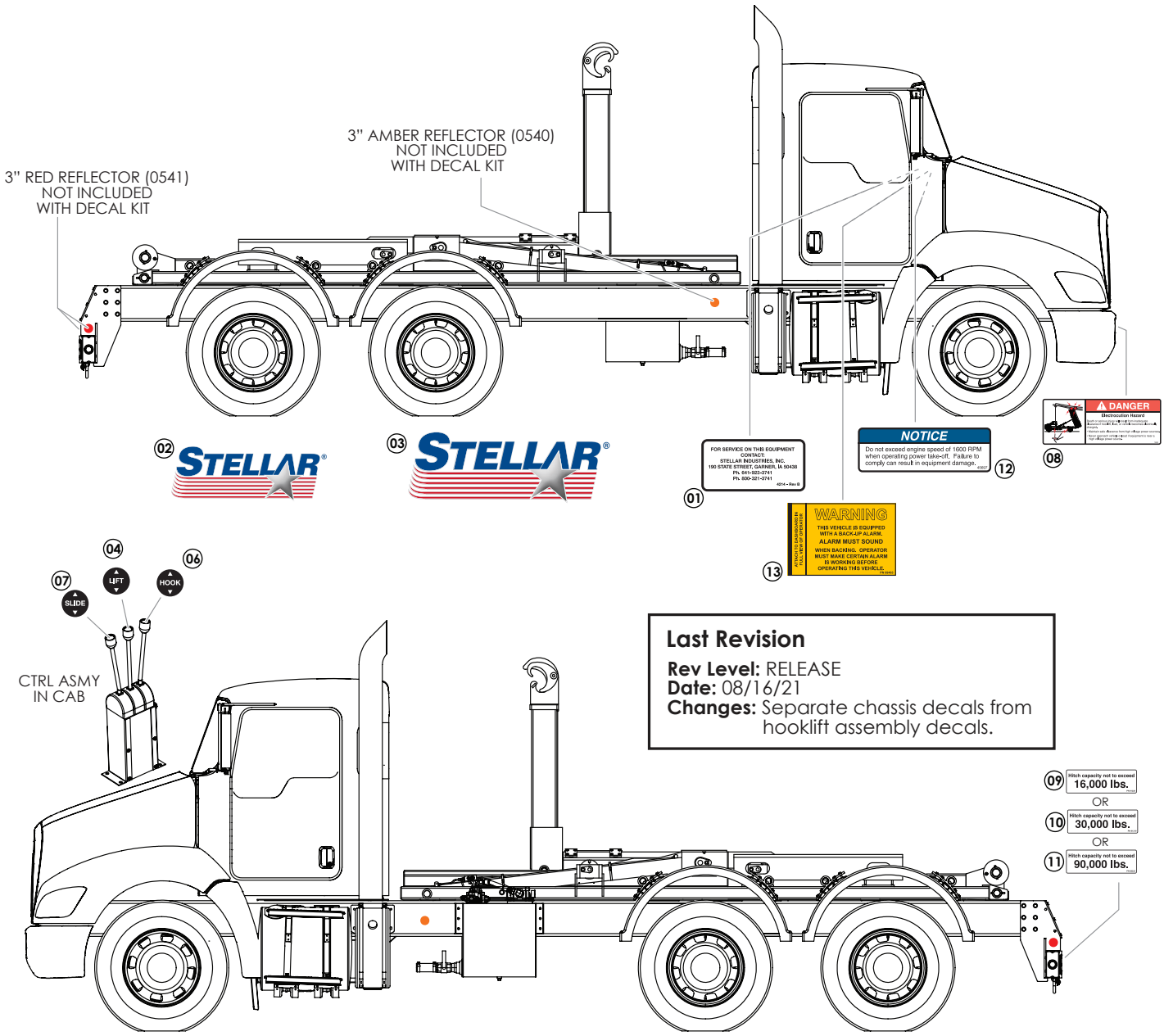

Last Revision

Rev Level: RELEASE
Date: 08/16/21
Changes: Separate chassis decals from hooklift assembly decals.

PN 121012

ITEM	PART No.	DESCRIPTION	SUGGESTED LOCATION	QTY.
01	4214	DECAL CONTACT STELLAR	IN CAB	1
02	53850	DECAL STELLAR LOGO 4.00X11.50	SHIPPED LOOSE - OPTIMAL PLACEMENT	1
03	52681	DECAL STELLAR LOGO 6.00X16.50	SHIPPED LOOSE - OPTIMAL PLACEMENT	1
04	39211	DECAL HOOKLIFT LEVER LIFT	CONTROL TOWER	2
05	39212	DECAL HOOKLIFT LEVER TILT	CONTROL TOWER	2
06	55414	DECAL HOOKLIFT LEVER HOOK	CONTROL TOWER	2
07	55754	DECAL HOOKLIFT LEVER SLIDE	CONTROL TOWER	2
08	79983	DECAL DANGER ELECTROCUTION	FRONT BUMPER - STREET SIDE OR REAR BUMPER - CURB SIDE	1
09	91220	DECAL HITCH CAPACITY 16K	SELECT APPROPRIATE CAPACITY; REAR BUMPER - ABOVE PINTLE LOCATION; DISCARD OTHERS	1
10	91219	DECAL HITCH CAPACITY 30K		1
11	68222	DECAL HITCH CAPACITY 90K		1
12	45697	ENGINE SPEED PTO CAUTION	IN CAB	1
13	69463	DECAL BACK-UP ALARM VERIFY	IN CAB	1

Step 14: Fill reservoir and activate hydraulic flow.

- Fill reservoir to site gauge, within 3” from the top (Roughly 25 Gallons). Note: ISO 32 hydraulic oil is recommended.
- When connections are secure, activate hydraulic flow by opening the ball valve on the bottom of the reservoir. This will allow oil to flow from the reservoir to the pump.

Step 15: Operate hooklift.

- **⚠WARNING** Stellar® Hooklift operators must conform to the qualifications specified in the *Slider Hooklift Safety, Operation, Maintenance, Troubleshooting Manual*. Read and understand all manuals and safety signs before operating or servicing this equipment.
- Bleed the air out of the hydraulic system.
- Check the hydraulic oil level and add oil if needed. When checking hydraulic oil level, make certain that **all system cylinders** are fully retracted.
- Calibrate dump light system.
- Be sure to check all clearances.
- Set/check relief pressure no higher than 4500 PSI (See procedure on next page).

Set System Relief Pressure

1. Engage the PTO. Run the PTO at 1200 RPM.
2. Push the control lever labeled ‘lift’ until the boom bottoms out. Keep pushing the lever forward until the pressure is set.

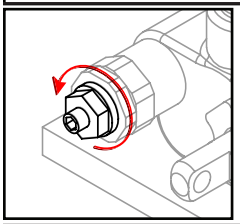

3. Locate the main relief valve and release the jam nut using a 13 mm wrench.

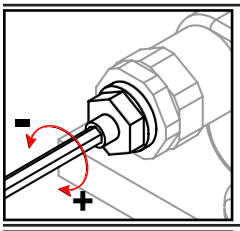

4. Adjust the system relief pressure using 4 mm allen wrench. Clockwise increases pressure, counter clockwise decreases pressure.

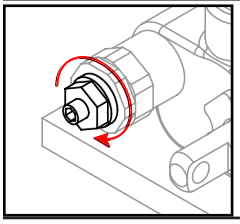

5. Once system pressure is set, tighten the jam nut to lock system pressure. Permanent thread lock should not be used.
6. Release all functions and disengage the PTO. Snap tamper cap into position over the jam nut. The break away clip will be destroyed if the cap is removed.

Chapter 3 - Assembly Drawings

Base Assembly - PN 117693

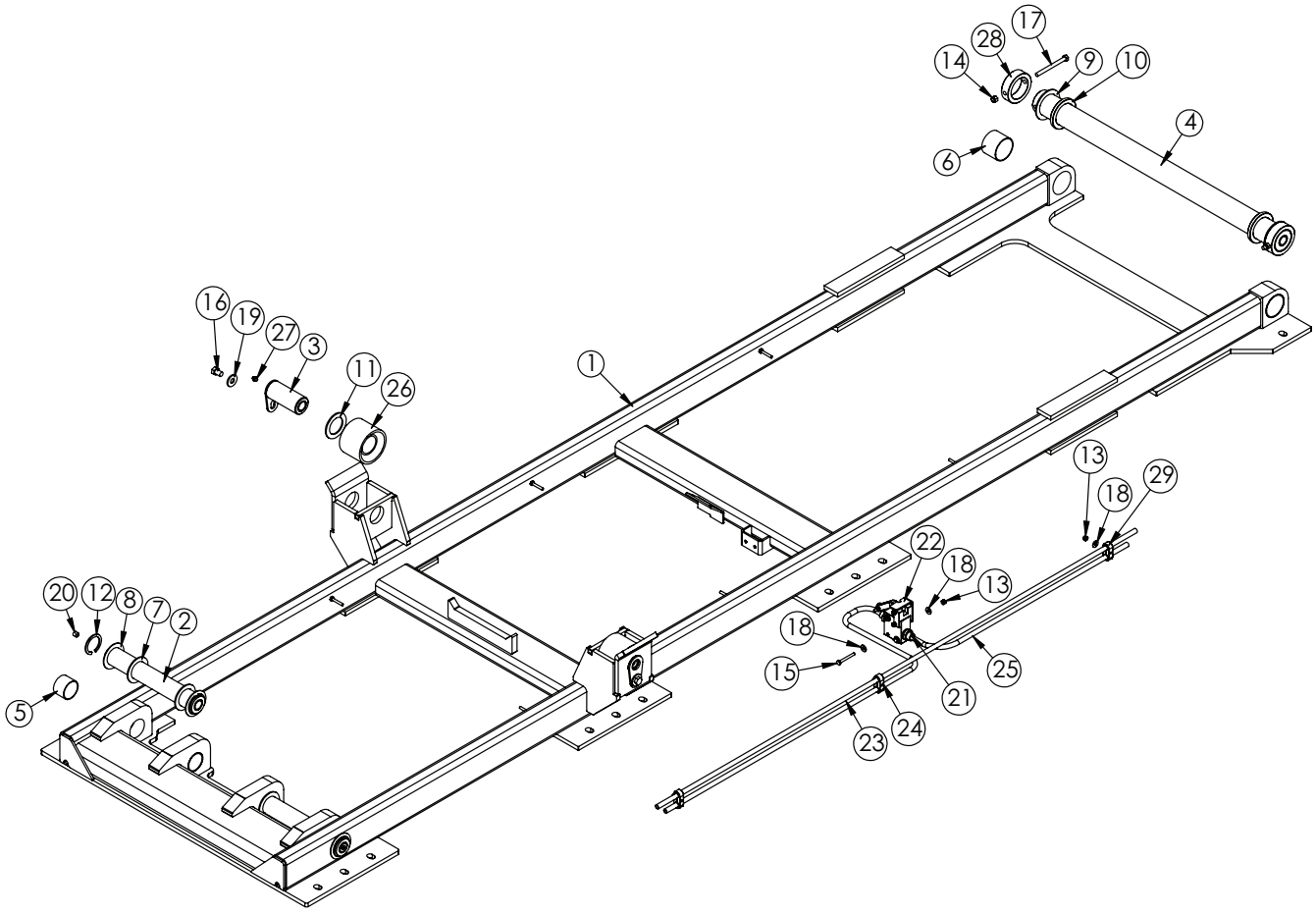

PN 117693

ITEM	PART No.	DESCRIPTION	QTY.
01	117694	BASE SLIDER20S GEN3 TUBE BASE	1
02	113371CR	PIN 2.00X13.13 SR ZC	2
03	54522CR	PIN TEAR DROP 2.00X4.38 W/ZERK ZC	2
04	26048CR	PIN 2.50X36.44 ZC	1
05	4380	BUSHING BPC32DXR24 2.00X1.50	4
06	0635	BUSHING BPC40DXR32 2.50X2.00	2
07	1546	THRUST WASHER 2.01DIA UHMW .12THK	4
08	0377	MACHY WASHER 2.00ID 14GA	4
09	1547	THRUST WASHER 2.51DIA UHMW .12THK	2
10	113368	COLLAR 2.51X3.50X0.38 UHMW	2
11	0427	MACHY WASHER 2.00ID 10GA	2
12	0108	SNAP RING 2.00 7200-200	4
13	0333	NUT 0.25-20 HHGR5 NYLOC	5
14	0347	NUT 0.38-16 HHGR5 NYLOC	2
15	0438	CAP SCR 0.25-20X2.25 HHGR5	2

ITEM	PART No.	DESCRIPTION	QTY.
16	C0990	CAP SCR 0.50-13X0.75 HHGR5	2
17	32086	CAP SCR 0.38-16X4.25 HHGR5	2
18	0340	WASHER 0.25 USS FLAT	7
19	0352	WASHER 0.50 USS FLAT	2
20	58052	SET SCREW 0.50-13X0.50 W/ RED PATCH	2
21	57735	FTG 8-8 MBSPP-MFS STRAIGHT	2
22	86130	VLV PLNGR HYD NRMLY CLOSED W/35 DEG ARM	1
23	117871	TUBE ASM 0.50X71.88 SLIDER20S G3 JIB EXTEND ZC	1
24	117870	TUBE ASM 0.50X42.38 SLIDER20S G3 JIB RETR VLV ZC	1
25	117922	TUBE ASM 0.50X27.00 SLIDER20S G3 JIB RETR ZC	1
26	45373	ROLLER 2.00X4.00X3.00 OUTSIDE SI60	2
27	C1592	ZERK 1/8 NPT STRAIGHT	2
28	23930	COLLAR 2.51X3.50X1.00 PC BLACK	2
29	96566	CLAMP 0.50 PORT TUBE TWIN - STAUFF LNGF	3

Plunger Valve Assembly - PN 86130

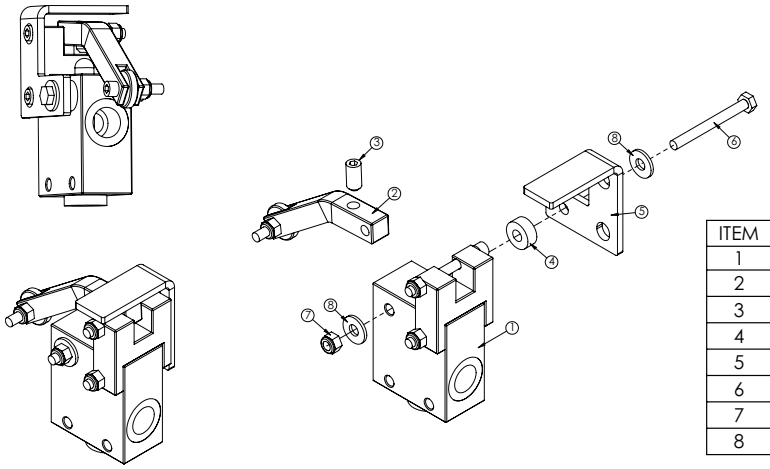

ITEM	PART	DESCRIPTION	QTY.
1	53853	VALVE PLUNGER VILLA HYD NORMALLY CLOSED	1
2	86126	LEVER ARM ASM 35 DEG	1
3	86161	SET SCREW 0.38-16X0.75 W/ RED PATCH	1
4	60348	COLLAR 0.31X0.75X0.31 UHMW	1
5	60470	BRKT PLUNGER VILLA HYD VALVE	1
6	0339	CAP SCR 0.25-20X2.50 HHGR5	1
7	0333	NUT 0.25-20 HHGR5 NYLOC	1
8	0340	WASHER 0.25 USS FLAT	2

Dump Assembly - PN 117696

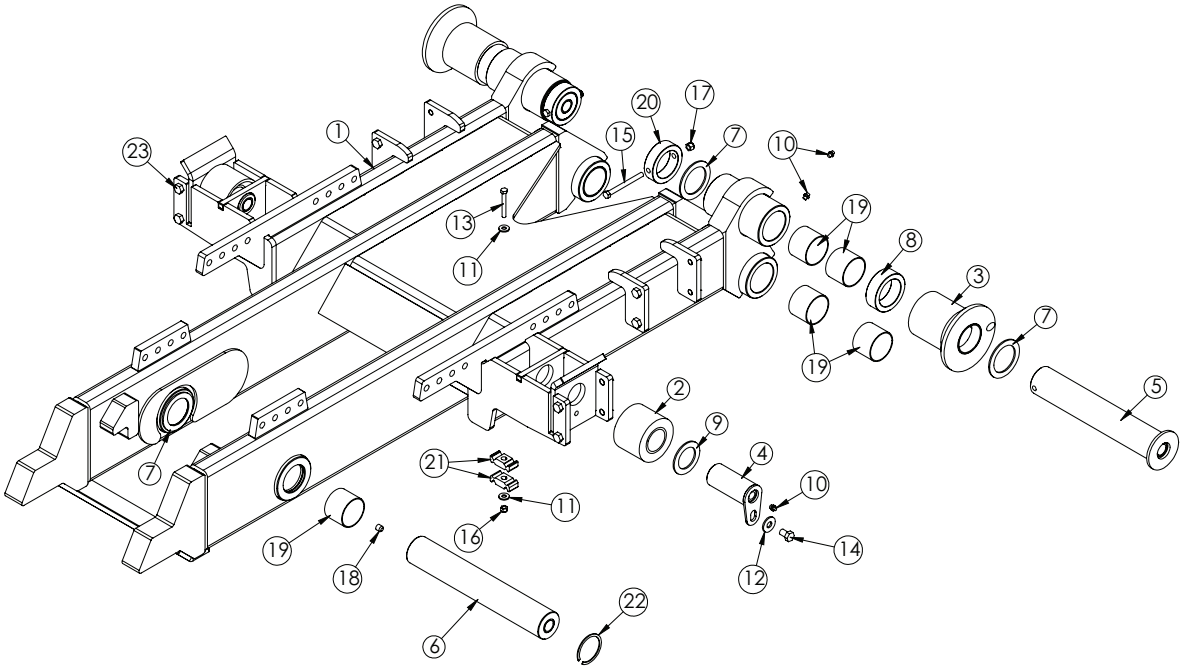

NOTE: ROLLERS 45373 TAPPER FACES TOWARDS INSIDE

PN 117696

ITEM	PART No.	DESCRIPTION	QTY.
1	117832	DUMP SLIDER20S GEN3	1
2	45373	ROLLER 2.00X4.00X3.00 OUTSIDE SI60	2
3	21496	ROLLER 2.50X4.00X3.81X6.00 PC YELLOW	2
4	54522CR	PIN TEAR DROP 2.00X4.38 W/ZERK ZC	2
5	54648CR	PIN WLDMT 2.50X14.19 ZC	2
6	113804	PIN 2.50X15.50 D&T	1
7	1547	THRUST WASHER 2.51DIA UHMW .12THK	6
8	54649	COLLAR 2.51X3.50X1.13 UHMW	2
9	0427	MACHY WASHER 2.00ID 10GA	2
10	C1592	ZERK 1/8 NPT STRAIGHT	6
11	0343	WASHER 0.31 USS FLAT	2
12	0352	WASHER 0.50 USS FLAT	2

ITEM	PART No.	DESCRIPTION	QTY.
13	0489	CAP SCR 0.31-18X2.50 HHGR5	1
14	C0990	CAP SCR 0.50-13X0.75 HHGR5	2
15	C0953	CAP SCR 0.38-16X4.00 HHGR5	2
16	0342	NUT 0.31-18 HHGR5 NYLOC	1
17	0347	NUT 0.38-16 HHGR5 NYLOC	2
18	58052	SET SCREW 0.50-13X0.50 W/ RED PATCH	1
19	0635	BUSHING 40DXR32 GARLOCK	10
20	23930	COLLAR 2.51X3.50X1.00 PC BLACK	2
21	8622	CLAMP HOSE/TUBE AG-2	2
22	22216	SNAP RING INSIDE 2.50	2
23	66945	CAP SCR 0.50-13X0.50 PLASTIC - BLACK	16

Outside Latch Assembly - PN 55358 (Optional)

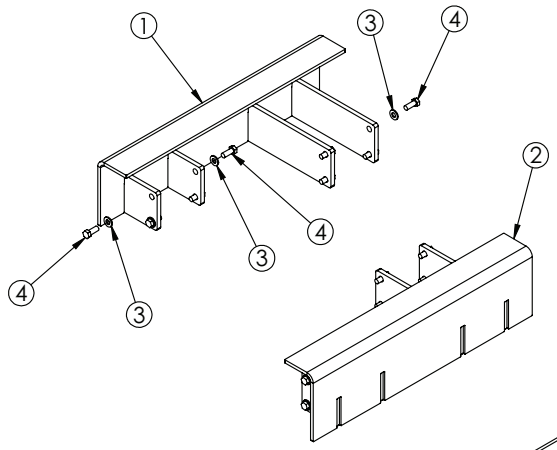

PN 55358

ITEM NO.	PART NUMBER	DESCRIPTION	QTY.
1	54812	LATCH WLDMT OUTSIDE CS BOLT ON	1
2	54816	LATCH WLDMT OUTSIDE SS BOLT ON	1
3	D0790	WASHER 0.50 SAE FLAT YELLOW GR8	16
4	10666	CAP SCR 0.50-13X1.25 HHGR8	16

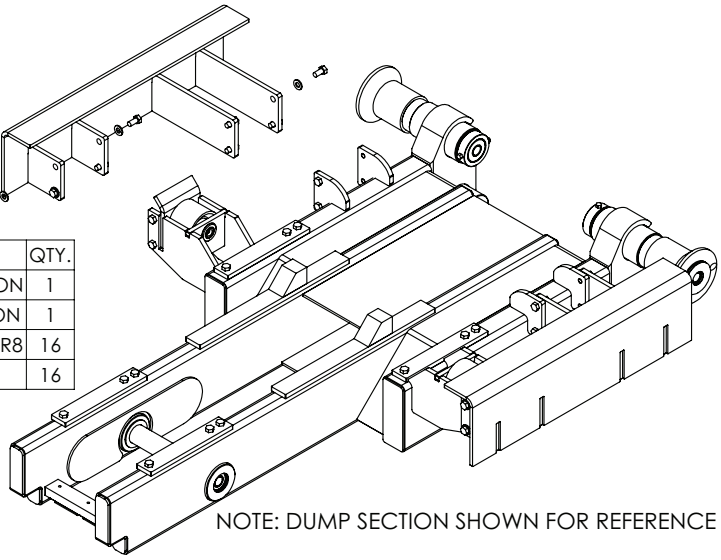

NOTE: DUMP SECTION SHOWN FOR REFERENCE

Inside Latch Assembly - PN 117619 (Optional)

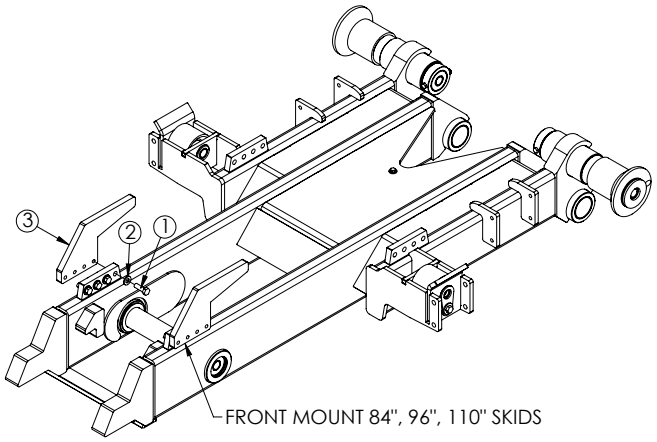

OR

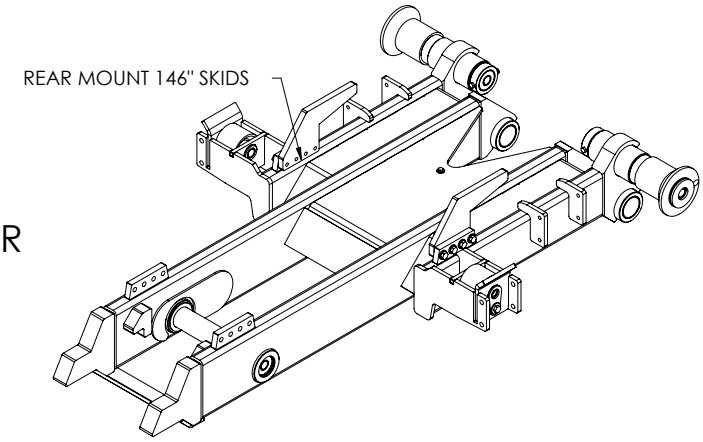

PN 117619

ITEM	PART No.	DESCRIPTION	QTY.
01	10548	CAP SCR 0.50-13X1.50 HHGR8	8
02	D0790	WASHER 0.50 SAE FLAT YELLOW GR8	8
03	117617	LATCH DUMP SLIDER 26 GEN3	2

Secondary & Dump Latch Assembly - PN 117834

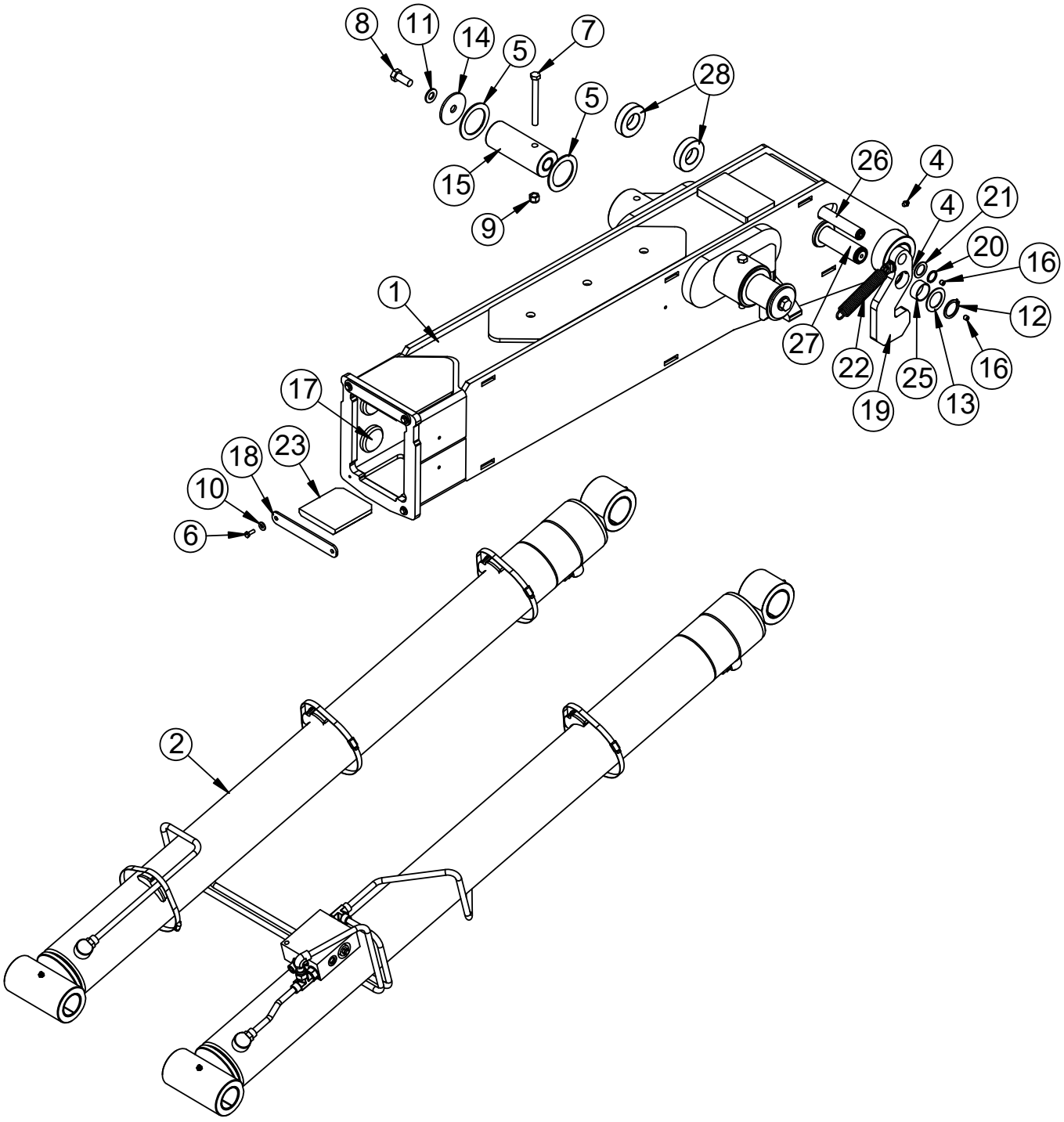

Secondary & Dump Latch Asm - PN 117834 Parts List

PN 117834			
ITEM	**PART**	**DESCRIPTION**	**QTY**
1	117835	SECONDARY SLIDER20S GEN3	1
2	117872	CYLINDER ASM DUAL SLIDER 20S GEN2	1
3	D0419	THRUST WASHER	2
4	c1592	ZERK 1/8 NPT STRAIGHT	3
5	1547	THRUST WASHER 2.51DIA UHMW .12THK	4
6	0479	CAP SCR 0.25-20X0.75 HHGR5	4
7	83958	CAP SCR 0.50-13X5.00 HHGR8	2
8	0356	CAP SCR 0.63-11X1.50 HHGR8	2
9	5468	NUT 0.50-13 HHGR8 NYLOC	2
10	0340	WASHER 0.25 USS FLAT	4
11	C5902	WASHER 0.63 SAE FLAT YELLOW GR8	2
12	0246	SNAP RING ID 7200 150	2
13	0376	MACHY WASHER 1.50ID 14GA	2
14	8454	PIN CAP 0.69x3.00x0.19 YZ	2
15	114015CR	PIN 2.50X6.50 D&T W/HOLE ZC	2
16	C3397	SET SCREW 0.38-16X0.38 W/ RED PATCH	2
17	114019	WEAR PAD 0.50X2.50 RND NYLATRON	4
18	114018	PLATE WEAR PAD COVER SEC SLIDER26 GEN3	2
19	113874	DUMP LATCH WLDMT SLIDER26 GEN3	2
20	0110	SNAP RING 1.00 ID 7200-100	2
21	0867	MACHY WASHER 1.00ID 14GA	2
22	54817	SPRING 1.00ODX0.125X4.50	2
23	114020	WEAR PAD 0.63IN SLIDER26 SECONDARY	2
24	0635	BUSHING BPC40DXR32 2.50X2.00	2
25	21810	BUSHING BPC24DXR12 1.50X.75	2
26	114016	PIN 1.00X10.81 SR	1
27	114017	PIN 1.50X11.00 SR	1
28	117100	COLLAR 1.51X3.00X0.75 UHMW	2

Main Cylinder Assembly - PN 117872

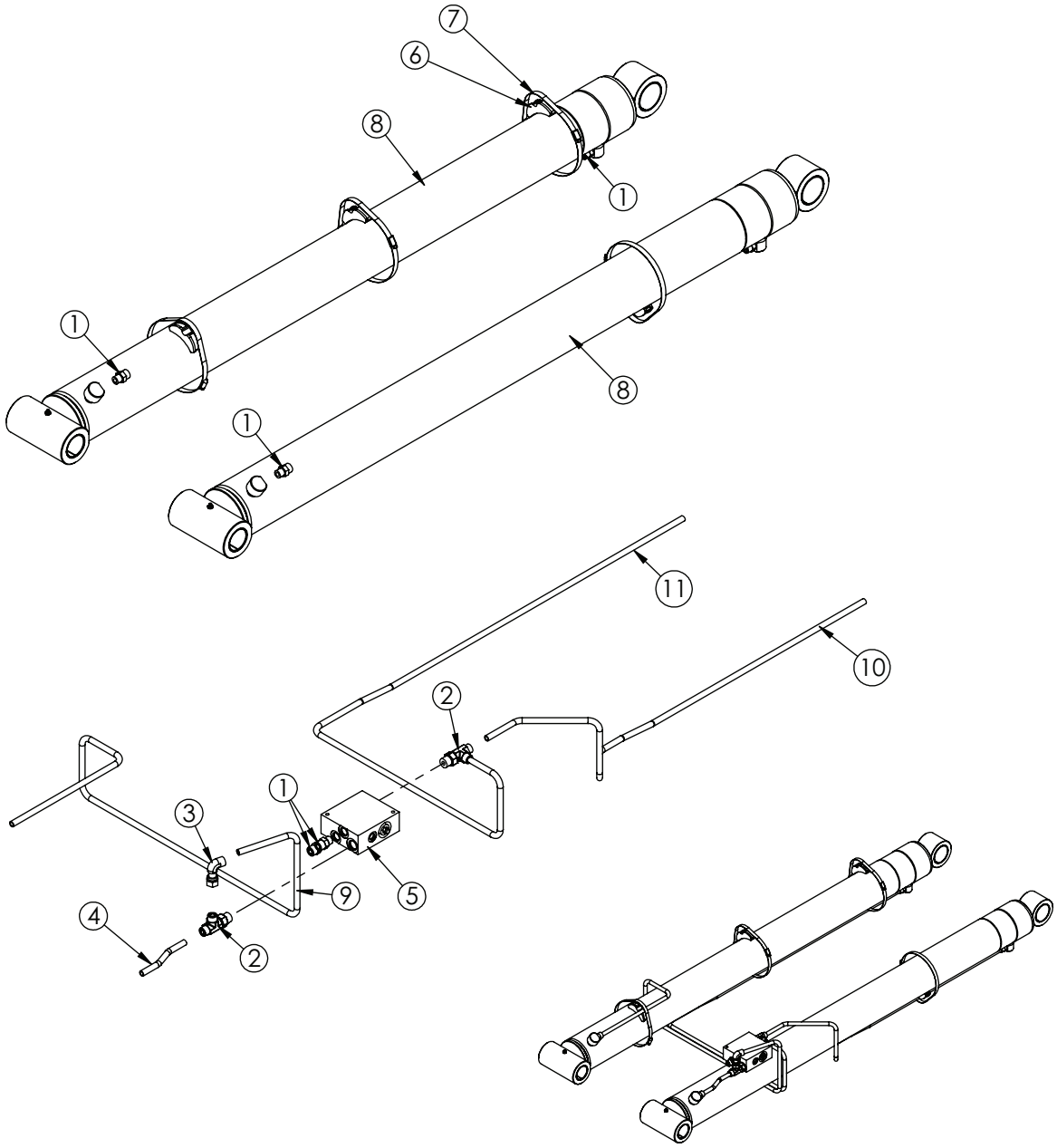

NOTES;
128443: SEAL KIT: (4.50 CYL 125819 / 117841-BOBALEE)

PN 117872

ITEM	PART No.	DESCRIPTION	QTY.
01	1554	FTG 8-8 MFS-MORB STRAIGHT	6
02	37179	FTG 8-10-8 MFS-MAORB-MFS TEE	2
03	C2376	FTG 8-8 MFS-FFSS 90	1
04	53847	TUBE ASM 0.50X5.75 SLIDER 26 SS EXTEND YZ	1
05	15995	MANIFOLD ASM DUAL T2A 5000PSI	1
06	18701	CLAMP PORT TUBE ZR518	4
07	19369	HOSE CLAMP 4.13-7.00 5416K38	4
08	117841	CYLINDER 4.50X59.50	2
09	117920	TUBE ASM 0.50X21.03 SLIDER 20S CS EXTEND ZC	1
10	117921	TUBE ASM 0.50X44.21 SLIDER 20S SS RETRACT YZ	1
11	117873	TUBE ASM 0.50X45.18 SLIDER20S GEN3 CS RETRACT YZ	1

Jib Asm. (36/54 in. Manual Hook Height) - PN 117865

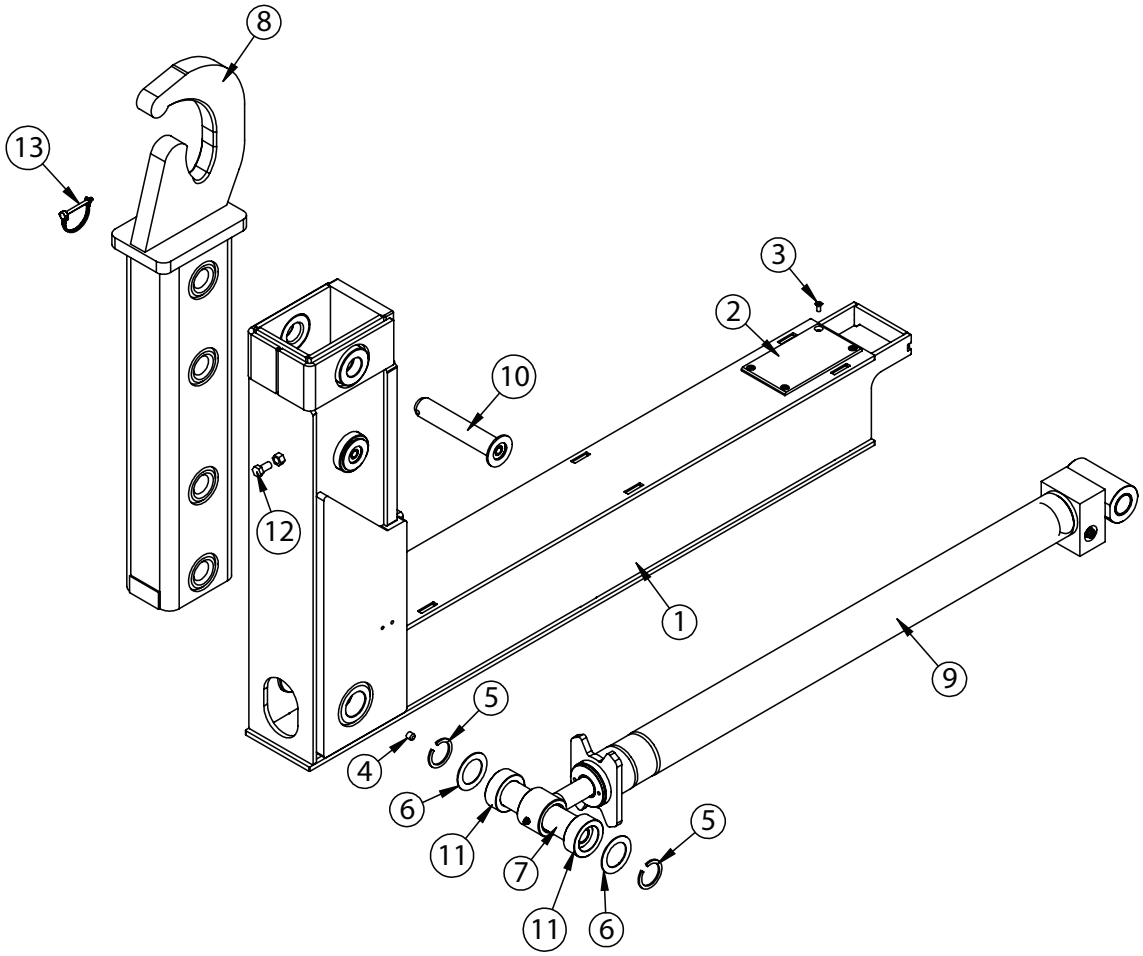

PN 117865

ITEM	PART No.	DESCRIPTION	QTY.
01	117866	JIB SLIDER20S GEN3 MANUAL	1
02	114041	WEAR PAD SLIDER26 JIB GEN3	2
03	25741	CAP SCR 0.25-20X0.63 FHSH SS	8
04	58052	SET SCREW 0.50-13X0.50 W/ RED PATCH	1
05	0108	SNAP RING 2.00 7200-200	2
06	0377	MACHY WASHER 2.00ID 14GA	2
07	47847CR	PIN 2.00X8.44 SR ZC	1
08	117565	JIB TOP SLIDER30 MANUAL 36/54HH	1
09	117927	CYL ASM 3.00X30.00 SHORT BOSSES W/#8 FTGS	1
10	117599CR	PIN WLDMT 1.50X8.13	2
11	89287	COLLAR 2.01X3.00X1.13 UHMW	2
12	10172	CAP SCR 0.50-13X1.00 HHGR8	1
13	117616	PIN 0.25X2.13 WIRE LOCK	2

Jib Asm. (36/54 in. Hyd. Hook Height) - PN 119117

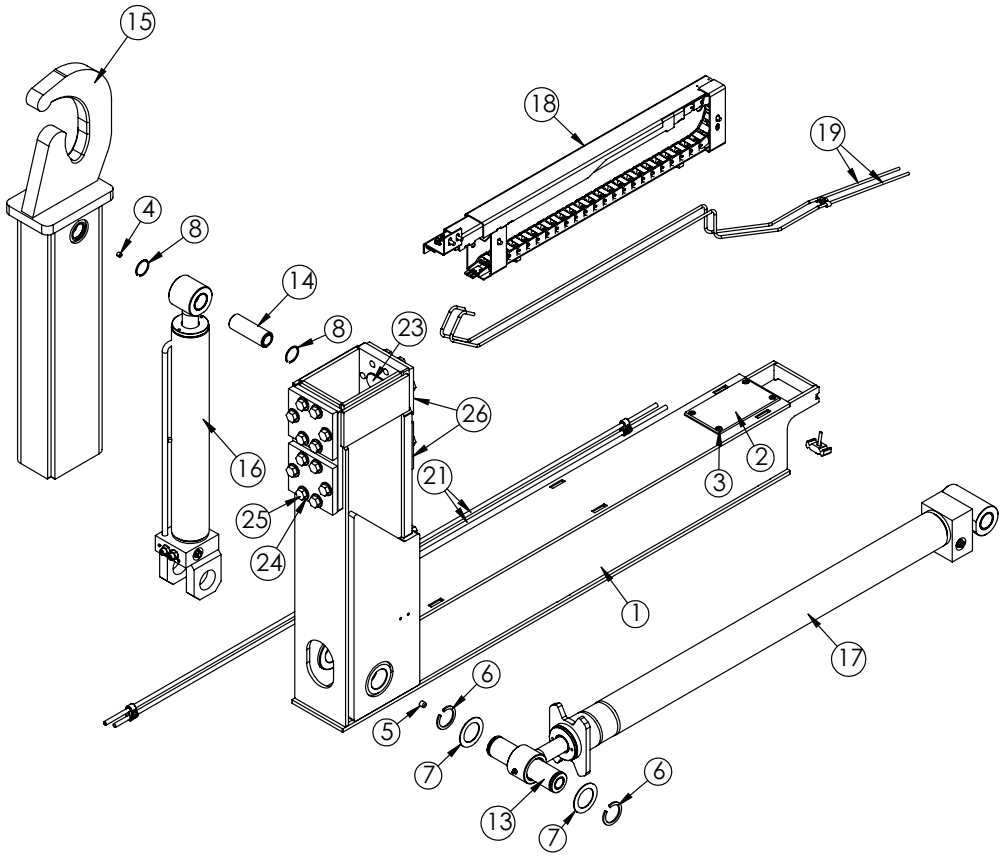

PN 119117

ITEM	PART No.	DESCRIPTION	QTY.
01	119118	JIB SLIDER20S GEN3 36/54HH	1
02	114041	WEAR PAD SLIDER26 JIB GEN3	2
03	25741	CAP SCR 0.25-20X0.63 FHSH SS	8
04	C3397	SET SCREW 0.38-16X0.38 W/ RED PATCH	1
05	58052	SET SCREW 0.50-13X0.50 W/ RED PATCH	1
06	0108	SNAP RING 2.00 7200-200	2
07	0377	MACHY WASHER 2.00ID 14GA	2
08	54129	SNAP RING INSIDE 1.50	2
09	0481	CAP SCR 0.25-20X2.00 HHGR5	1
10	0340	WASHER 0.25 USS FLAT	6
11	C5606	CLAMP 0.25 BLK VINYL	2
12	0333	NUT 0.25-20 HHGR5 NYLOC	4
13	47847CR	PIN 2.00X8.44 SR ZC	1

ITEM	PART No.	DESCRIPTION	QTY.
14	54130CR	PIN 1.50X4.31 D&T	1
15	113053	JIB TOP SLIDER30 HYD ADJUST 36/54HH	1
16	54529	CYLINDER ASM 3.00X17.88	1
17	117927	CYL ASM 3.00X30.00 SHORT BOSSES W/#8 FTGS	1
18	119417	HOSE TRACK ASM SLIDER20S GEN3	1
19	119420	TUBE ASM 0.25 SLIDER20S GEN3 JIB HH ZC	2
20	8622	CLAMP HOSE/TUBE AG-2	1
21	119421	TUBE ASM 0.38X72.00 SLIDER20S G3 JIB EXTEND ZC	2
22	96567	CLAMP 0.38 PORT TUBE TWIN - STAUFF LNGF	3
23	42448	WEAR PAD A2 HYD JIB	4
24	C5902	WASHER 0.63 SAE FLAT YELLOW GR8	24
25	112083	CAP SCR 0.63-11X1.75 HHGR5 W/RED PATCH	24
26	43513	PLATE WEAR PAD COVER SLIDER34 JIB PC BLACK	4

Jib Asm. (36/54 in. Hyd. Hook Height) - PN 119117 (cont.)

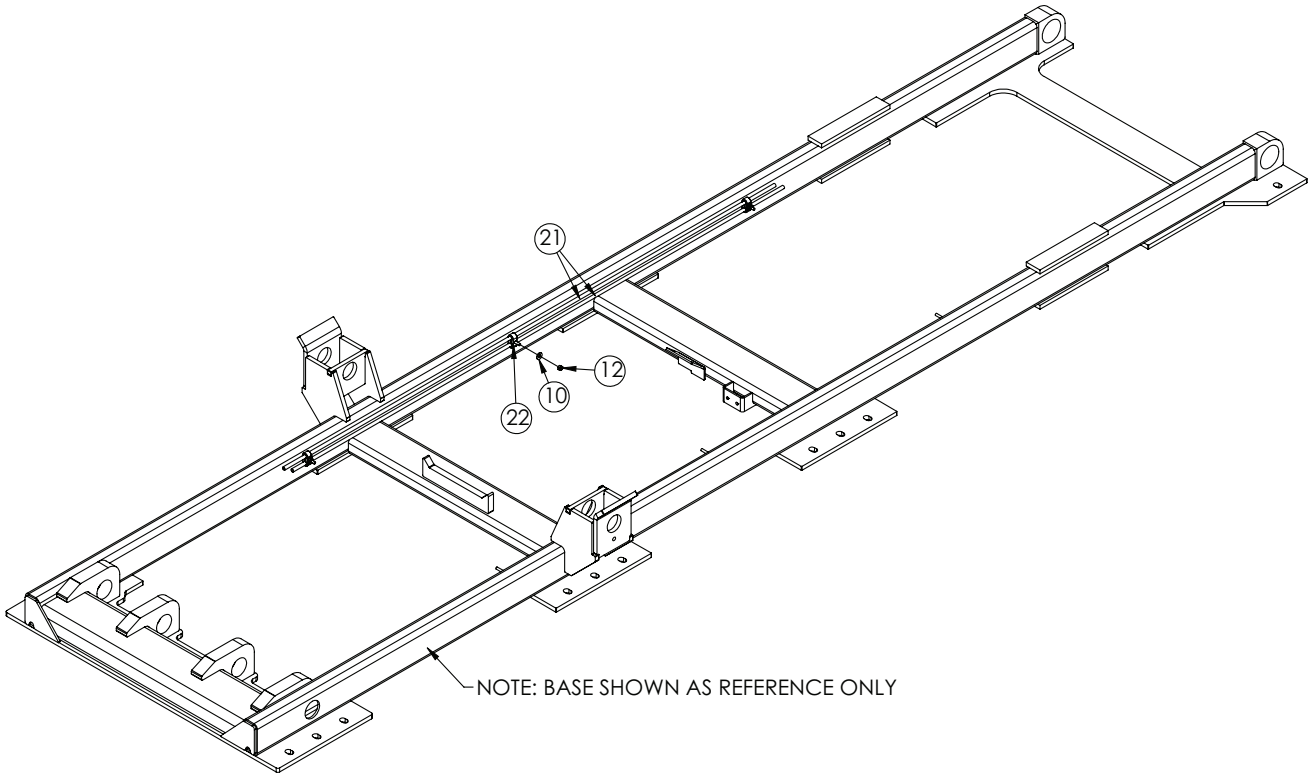

REFERENCE BILL OF MATERIAL TABLE ON PAGE 36

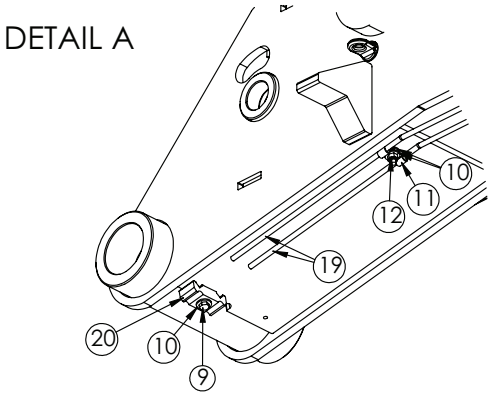

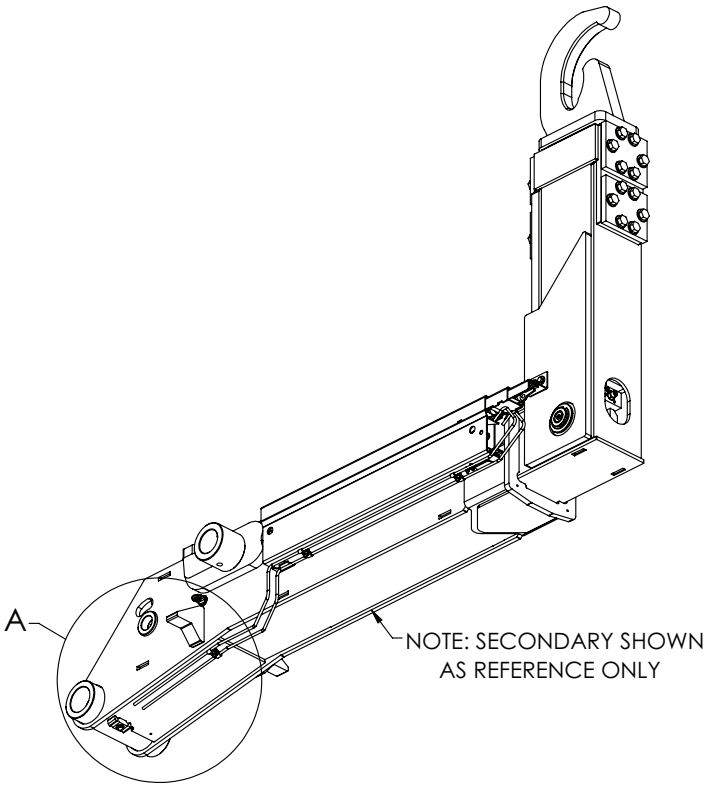

Hose Track - PN 119417

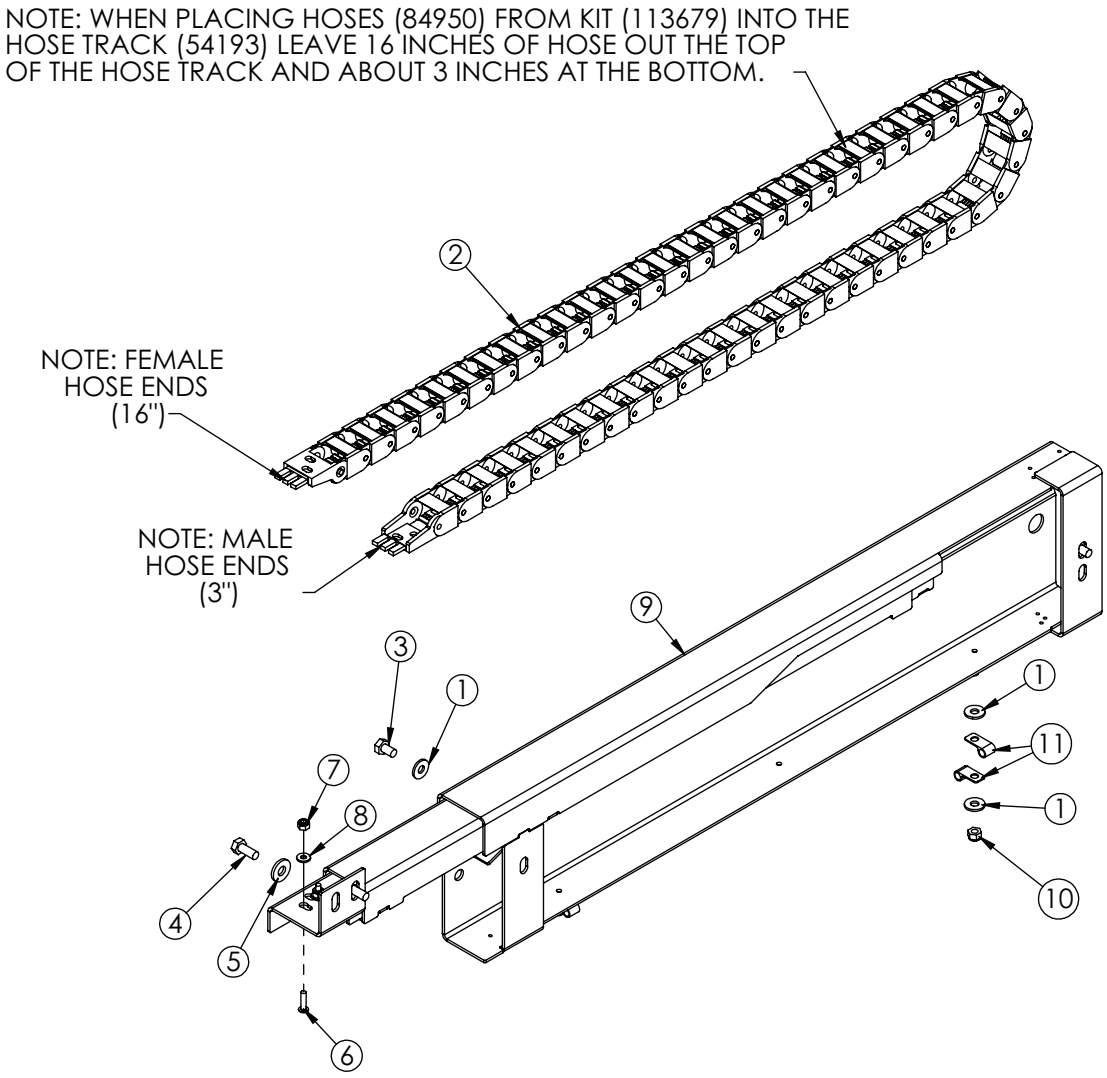

PN 119417

ITEM	PART No.	DESCRIPTION	QTY.
01	0340	WASHER 0.25 USS FLAT	6
02	54193	HOSE TRACK SLIDER 26	1
03	0484	CAP SCR 0.31-18X0.50 HHGR5	2
04	0420	CAP SCR 0.31-18X0.75 HHGR5	2
05	0343	WASHER 0.31 USS FLAT	2
06	D0894	CAP SCR #10-24X0.75 BTNHD SS	4
07	C4956	NUT #10-24 HH NYLOC SS	4
08	D0178	WASHER #10 SAE FLAT	4
09	119418	HOSE TRACK WLDMT SLIDER20S GEN3	1
10	0333	NUT 0.25-20 HHGR5 NYLOC	2
11	C5606	CLAMP 0.25 BLK VINYL	4

Extension Cylinder Assembly - PN 117927

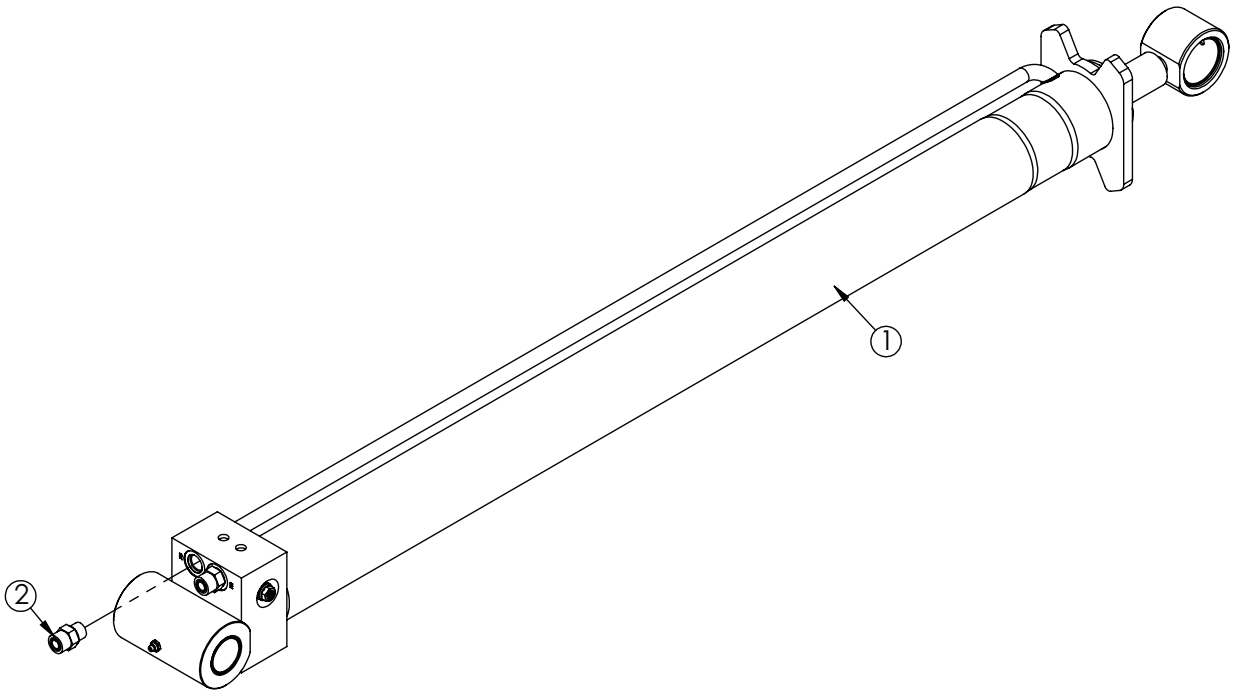

NOTES:
128444: SEAL KIT 3.00 CYL 122792 / 125818 / 117842 / 113594-BOBA-LEE

PN 117927

ITEM	PART No.	DESCRIPTION	QTY.
01	117842	CYLINDER 3.00X30.00 SHORT BOSS'S W/ #8 PORTS	1
02	1554	FTG 8-8 MFS-MORB STRAIGHT	2

Tilt Cylinder Assembly - PN 54529

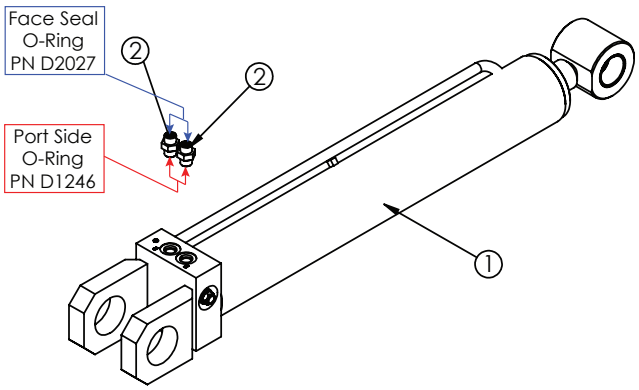

Tilt Cylinder
36" to 54" Hydraulic Adjustable Hook Height
PN 54529

ITEM	PART	DESCRIPTION	QTY.
1	54521	CYLINDER 3.00X17.88	1
2	C4922	FTG 4-6 MFS-MORB STRAIGHT	2

NOTE: BUSHINGS ARE SHOWN FOR REFERENCE ONLY.

SEAL KIT: PN 42471

Toolbox Assembly - PN 8480

PN 8480

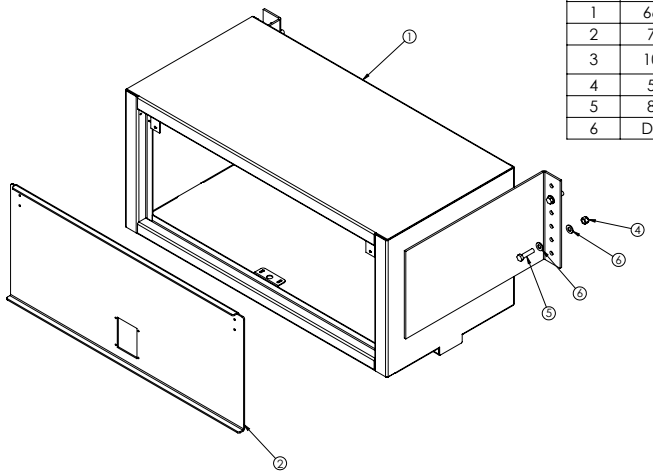

ITEM	PART	DESCRIPTION	QTY.
1	66791	UBTB WLDMT OH 20X45X22 W/MOUNTS	1
2	7193	DOOR AL OH 17.13X40.00	1
3	10638	HARDWARE ASM OH DOOR NOT SHOWN (NOT SHOWN)	1
4	5468	NUT 0.50-13 HHGR8 NYLOC	4
5	8833	CAP SCR 0.50-13X2.00 HHGR8	4
6	D0790	WASHER 0.50 SAE FLAT YELLOW GR8	8

NOTE: ITEMS NOT SHOWN:
C5976 (8 FT)WEATHERSTRIP
70174 OH DOOR STOP KIT

Toolbox Assembly - PN 10401

PN 10401

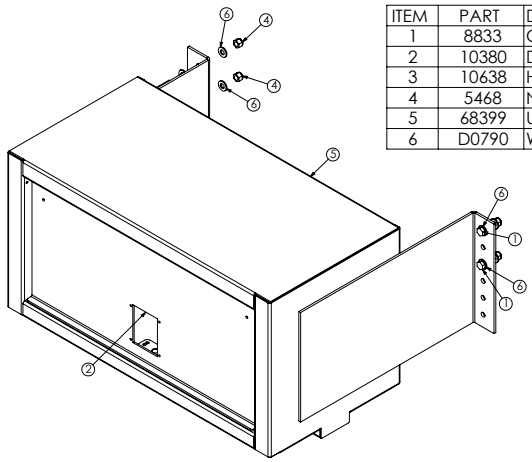

ITEM	PART	DESCRIPTION	QTY.
1	8833	CAP SCR 0.50-13X2.00 HHGR8	4
2	10380	DOOR AL OH 15.19X31.00	1
3	10638	HARDWARE ASM OH DOOR NOT SHOWN (NOT SHOWN)	1
4	5468	NUT 0.50-13 HHGR8 NYLOC	4
5	68399	UBTB WLDMT OH OH 18X36X18 W/MOUNTS TAB	1
6	D0790	WASHER 0.50 SAE FLAT YELLOW GR8	8

ITEMS NOT SHOWN:
C5976 (5 FT)WEATHERSTRIP
70174 OH DOOR STOP KIT

Toolbox Assembly - PN 10402

PN 10402

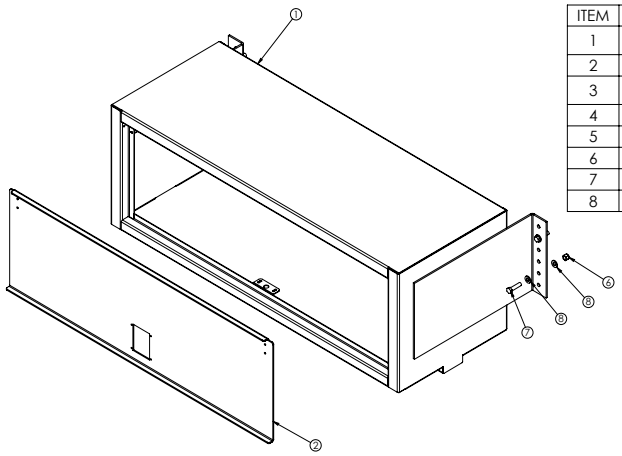

ITEM	PART	DESCRIPTION	QTY.
1	68604	UBTB WLDMT OH 20X58X22 W/MOUNTS TAB	1
2	10427	DOOR AL OH 17.19X53.00	1
3	10638	HARDWARE ASM OH DOOR NOT SHOWN (NOT SHOWN)	1
4	0479	CAP SCR 0.25-20X0.75 HHGR5	2
5	0333	NUT 0.25-20 HHGR5 NYLOC	2
6	5468	NUT 0.50-13 HHGR8 NYLOC	4
7	8833	CAP SCR 0.50-13X2.00 HHGR8	4
8	D0790	WASHER 0.50 SAE FLAT YELLOW GR8	8

ITEMS NOT SHOWN:
C5976 (8 FT)WEATHERSTRIP
70174 OH DOOR STOP KIT

Optional Fender Kit - PN 116164

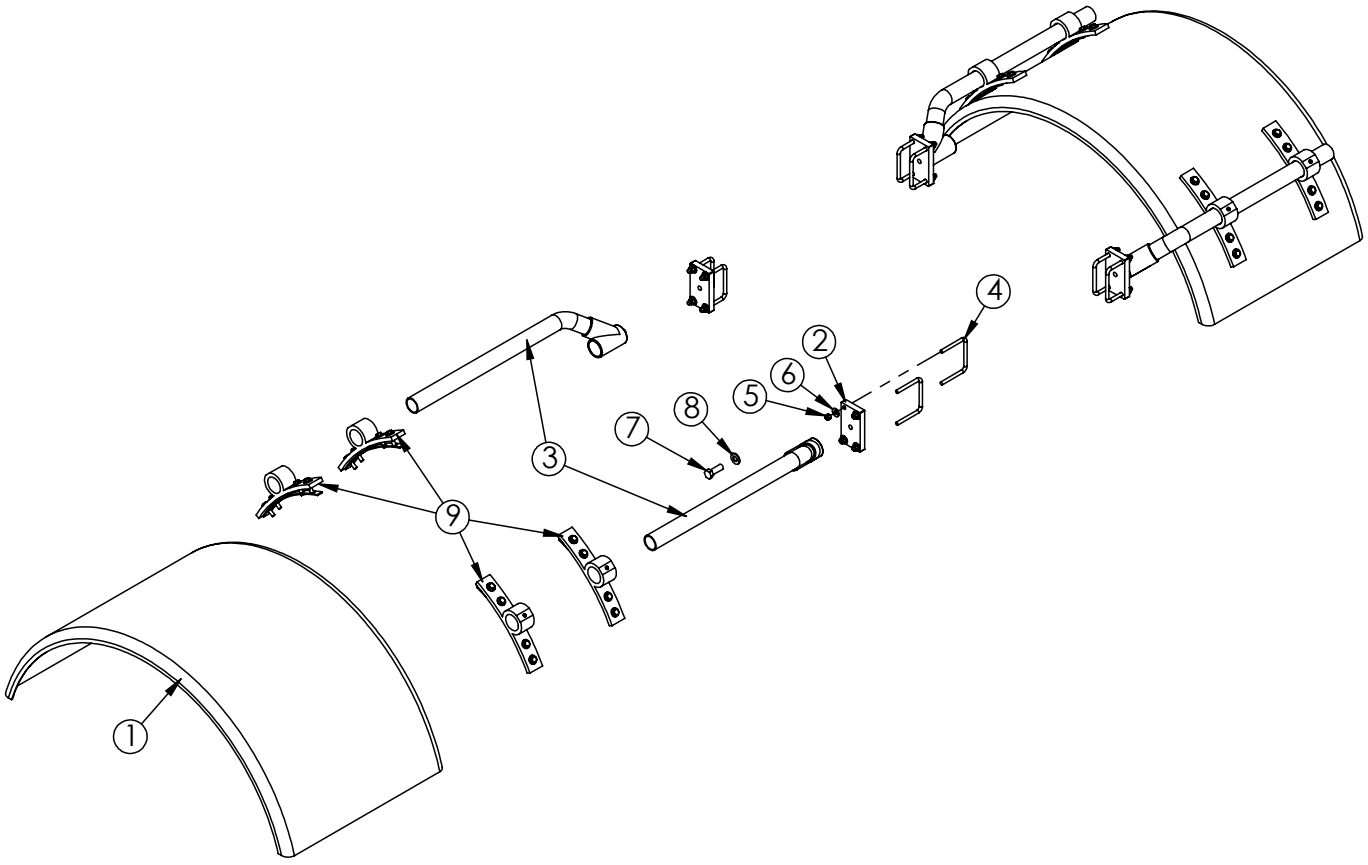

PN 116164

ITEM	PART No.	DESCRIPTION	QTY.
01	116165	FENDER SINGLE AL DPS CNE	2
02	86004	FLAT 0.75X3.00X5.38 CR W/HOLES PC BLACK	4
03	5733	MTG KIT OFFSET POLY FENDER (FLEET)	2
04	80044	U BOLT 0.38X4.00X4.00 ZP	8
05	0347	NUT 0.38-16 HHGR5 NYLOC	16
06	0346	WASHER 0.38 USS FLAT	16
07	11693	CAP SCR 0.63-11X1.75 HHGR8	4
08	C5902	WASHER 0.63 SAE FLAT YELLOW GR8	4
09	7633	FENDER MOUNT ASM KIT	2

Optional Threshold Plate Kit - PN 119066

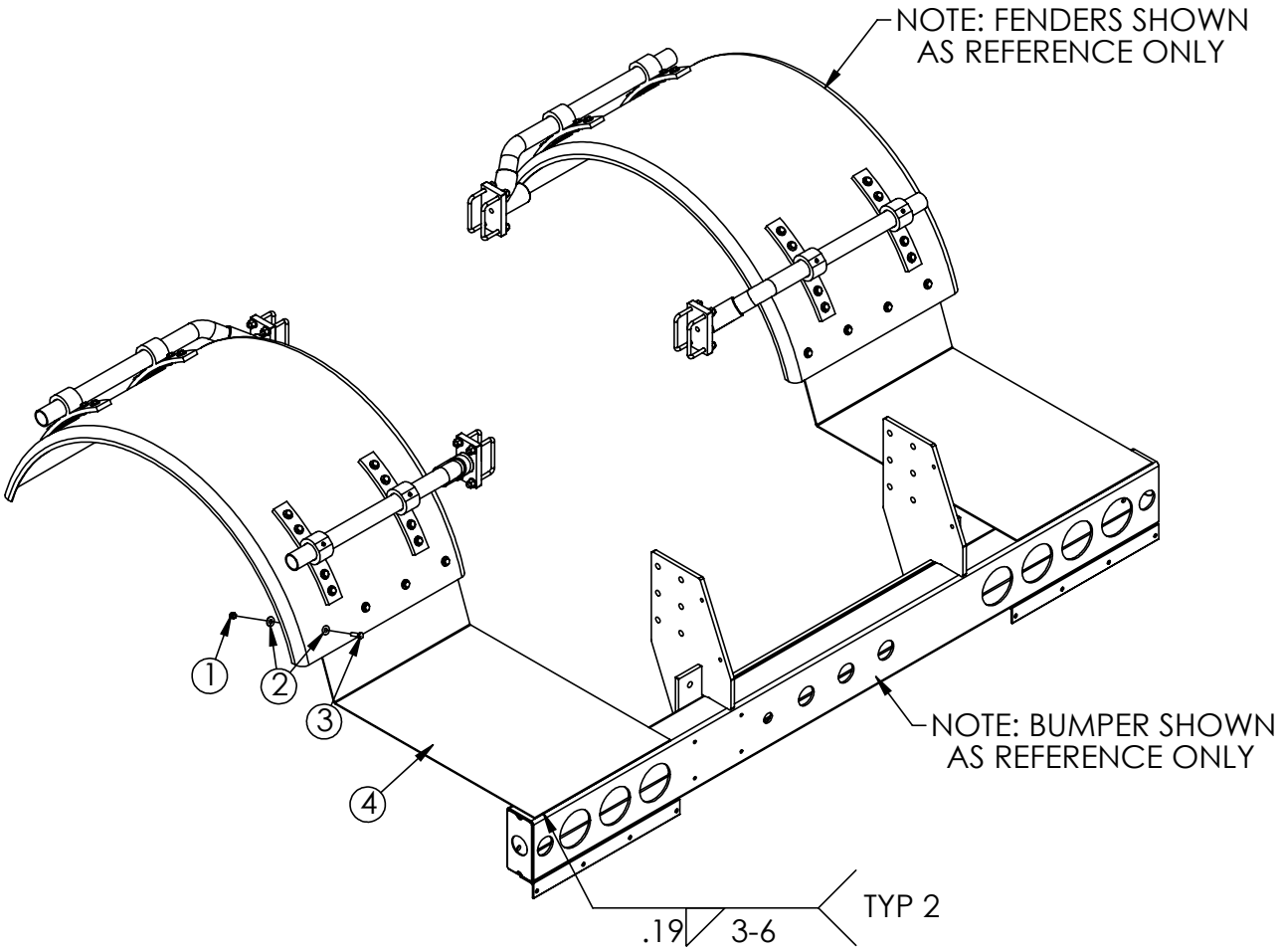

PN 119066

ITEM	PART No.	DESCRIPTION	QTY.
01	0347	NUT 0.38-16 HHGR5 NYLOC	8
02	0346	WASHER 0.38 USS FLAT	16
03	0335	CAP SCR 0.38-16X1.25 HHGR5	8
04	116166	ANGLE FORMED 10GAX8.50X33.28X20.38	2

Subject to Change without Notification.
© 2022 Stellar Industries, Inc.